ELECTRICAL LEGEND NOTES (RETAIL AREA):

R1 PROVIDE CONDUIT AND PULL WIRE FROM 6" ABOVE CEILING TO DOUBLE GANG JUNCTION BOXES LOCATED 5'-0" AFF AT FRONT ENTRANCE DOOR AND AT PHARMACY. JUNCTION BOXES ARE FOR ALARM KEYPADS.

R2 PROVIDE EDWARDS #340-4G5 24 VOLT ADAPTA-BELL AT 6" ABOVE CEILING AND CONNECT TO PUSHBUTTON AT RECEIVING AREA DOOR.

R3 PROVIDE DEDICATED NEMA L14-20R (PUSH/TWIST TYPE) RECEPTACLE FOR FREEZER AT 8" AFF 20 AMP CIRCUIT WIRED DIRECTLY TO DISTRIBUTION PANEL. DO NOT CONNECT TO EMS. VERIFY EXACT LOCATION AND TYPE OF FREEZER WITH TENANT SHEET F-1 PRIOR TO ROUGH-IN AND INSTALLATION.

R4 PROVIDE A STANDARD DUPLEX RECEPTACLE MOUNTED ON RETAIL SIDEWALLS 4" AFF RECEPTACLE TO BE USED FOR PLUG WHICH IS PROVIDED WITH SHELVING KICKPLATE. COORDINATE EXACT LOCATION WITH FINAL CVS MERCHANDISE PLAN (F-1).

R5 PROVIDE DUPLEX RECEPTACLE ON BACK OF COLUMN (ON SIDE IF CONFLICT WITH MERCHANDISING FIXTURE RE: MERCHANDISE PLAN) AT 18" AFF PROVIDE LOW PROFILE SURFACE BOX (WITH NO KNOCKOUTS ON ANY OF THE VISIBLE SIDES).

R6 PROVIDE DUPLEX RECEPTACLE ABOVE CEILING, CENTERED OVER HANGING SIGN. RUN THE ELECTRICAL CHORD THROUGH PLASTIC CHAIN COVER. COORDINATE WITH SIGN INSTALLER. INSTALL DUPLEX RECEPTACLE FLUSH IN CEILING IF REQUIRED BY LOCAL AUTHORITIES HAVING JURISDICTION.

R7 MAKE CONNECTION TO AUTOMATIC DOOR (DEDICATED CIRCUIT). WIRING/CONDUIT SHALL BE COMPLETELY CONCEALED, PROVIDE 90° FLEX WP.

R8 WHEN GONDOLA RUN CONCEALS BOTTOM OF COLUMN(S), RUN LINE IN CONDUIT AND WIRE MOLD TO BASE OF COLUMN WITH 4" WHIP TO INSTALL A DUPLEX RECEPTACLE IN GONDOLA KICKPLATE AT COLUMN LOCATIONS.

R9 WIRE THERMOSTAT TO CONDENSING UNIT ON ROOFTOP PER COOLER MANUFACTURER'S WIRING DIAGRAM.

R10 WIRE LIQUID LINE SOLENOID TO CONDENSING UNIT ON ROOFTOP PER COOLER MANUFACTURER'S WIRING DIAGRAM.

R11 PROVIDE DUPLEX RECEPTACLE AT 80" AFF (MOUNTED SIDEWAYS) FOR LIGHTED FIXTURE HEADERS.

R12 WIRE EVAPORATOR COILS TO THE COOLER CONTROL PANEL PER MANUFACTURER'S WIRING DIAGRAMS. RE: 5/E2.1

R13 SEAL ALL CONDUIT PENETRATIONS WITH BOTH EXPANDING FOAM SEALANT AND SILICONE SEALANT IN COOLER FOR ENTRANCE AND CEILING LIGHTS PER MFR REQUIREMENTS.

R14 PROVIDE 1-1"C FOR THE MUZAK SYSTEM AND 1-1 1/2"C FOR THE SATELLITE DISH SYSTEM (VSAT) ABOVE THE CEILING WITH PULL WIRE FROM PITCH POCKET TO WALL OF MANAGER'S OFFICE.

R15 PROVIDE 3 - 1" C. WITH PULLWIRES. STUB UP UNDER CABINET AND AT 12" ABOVE SUSPENDED CEILING. PROVIDE 2 LOW VOLTAGE CONDUITS AND 1 POWER CONDUIT WITH TAGGED AND LABELED PULL WIRE.

R16 PROVIDE 1" CONDUIT (WITH PULLWIRE) FROM INDICATED CHECKPOINT EAS PEDESTAL TO THE WALL AND UP TO 12" ABOVE THE CEILING LINE. PROVIDE AN ADDITIONAL 1" CONDUIT (WITH PULL WIRE) BETWEEN EACH EAS PEDESTAL. STUB-UP CONDUIT AND CUT FLUSH WITH FINISHED FLOOR. CHECKPOINT INSTALLATION TECHNICIAN TO MAKE ALL CONNECTIONS (24VDC AND CAT5) TO PEDESTALS. ROUTE CONDUIT UP DOOR ON SIDE INDICATED. RE: 3/E-3.2 FOR UNDERSLAB CONDUIT LAYOUT.

R17 PROVIDE DEDICATED CIRCUIT FROM DISTRIBUTION PANEL FOR CHECKPOINT 110V POWER. PROVIDE A QUAD RECEPTACLE MOUNTED TO WALL 12" ABOVE CEILING SPACE. CHECKPOINT INSTALLATION TECHNICIAN WILL PROVIDE WIRING AND DIRECT CONNECTION FROM RECEPTACLE TO THE UNITS.

R18 PROVIDE 6 - 1"C WITH PULLWIRES. STUB UP AT LOCATION SHOWN ON FLOOR PLAN AND AT 12" ABOVE SUSPENDED CEILING. PROVIDE 3 LOW VOLTAGE CONDUITS AND 3 POWER CONDUITS WITH TAGGED & LABELED PULLWIRE. RE: 3/E-2.1.

R19 PROVIDE A DUPLEX RECEPTACLE NEAR THE CONDUIT STUB-UP UNDER THE FIXTURE BASE. STUB UP 1/2" C WITH PULLWIRE AT LOCATION SHOWN ON FLOOR PLAN.

R20 PROVIDE & INSTALL GFI TOP RAIL OUTLET AS MANUF BY GONDOLA SUPPLIER. CONCEAL ALL WIRING FROM OUTLET TO WIRING CHASE WITHIN GONDOLA.

R21 PROVIDE JUNCTION BOX FOR COOLER DOOR HEATER.

R22 PROVIDE DUPLEX RECEPTACLE (MOUNTED SIDEWAYS) AND DATA/PHONE LINE BOTH MOUNTED AT 27" AFF FOR UNICRU KIOSK. COORDINATE EXACT LOCATION WITH FINAL CVS MERCHANDISE PLAN (F-1).

R23 PROVIDE DUPLEX RECEPTACLES FOR FAST LANE MERCHANDISE (FLM). PROVIDE WIRING CHASE AS MANUF BY WIDDENBACH-BROWN W/ ALL COMPONENTS FOR A COMPLETE AND STATIONARY INSTALLATION. WIRING CHASES TO BE FLUSH MOUNTED TO TOP OF GONDOLA RE: 11/E-2.1. COORDINATE EXACT LOCATION WITH FINAL CVS MERCHANDISE PLAN (F-1).

R24 ECC W/ DUPLEX AND DATA/PHONE LINE MOUNTED ON FIXTURE. PROVIDE WIRING CHASE AS MANUF BY WIDDENBACH-BROWN W/ ALL COMPONENTS FOR A COMPLETE AND STATIONARY INSTALLATION. WIRING CHASES TO BE FLUSH MOUNTED TO TOP OF GONDOLA RE: 11/E-2.1. RE: FINAL CVS MERCHANDISE PLAN (F-1) FOR LOCATION.

R25 PROVIDE FLUSH MOUNTED DUPLEX RECEPTACLE IN CEILING FOR TRANSOM SIGN.

R26 PROVIDE FLUSH MOUNTED DUPLEX RECEPTACLE IN CEILING FOR SECURITY TV MONITOR, VERIFY IF REQUIRED.

R27 PROVIDE WIRING CHASE AS MANUF BY WIDDENBACH-BROWN W/ ALL COMPONENTS FOR A COMPLETE AND STATIONARY INSTALLATION. WIRING CHASES TO BE FLUSH MOUNTED TO TOP OF GONDOLA RE: 11/E-2.1. PROVIDE JUNCTION BOX 6" ABOVE CEILING FOR WIRING CHASE CONNECTION.

R28 MOUNT QUAD RECEPTACLE AND PHONE/DATA OUTLET 32" AFF BEHIND FIXTURE FOR COMPUTER, SKIN SCANNER AND TELEPHONE.

R29 PROVIDE DUPLEX RECEPTACLE AT 80" AFF (MOUNTED SIDEWAYS) FOR LIGHTED SHELVES.

R30 PROVIDE DUPLEX RECEPTACLE & DATA OUTLET MOUNTED FLUSH IN END OF CHECKOUT COUNTER FOR ATM. CIRCUIT AS INDICATED WITH 2#12, #12G, 3/4"C.

R31 PROVIDE FLUSH MOUNTED DUPLEX RECEPTACLE IN CEILING, EQUALLY SPACED IN WINDOW.

R32 PROVIDE DUPLEX RECEPTACLE MOUNTED FLUSH IN END OF CHECKOUT COUNTER FOR FAST LANE MERCHANDISE (FLM). CIRCUIT AS INDICATED WITH 2#12, #12G, 3/4"C.

R33 PROVIDE DUPLEX RECEPTACLE FOR MOTORIZED SHOPPING CART, AS REQUIRED.

R34 PROVIDE 1" CONDUIT CONCEALED WITHIN WALL WITH PULL WIRE FOR SECURITY CABLES RE: 3/E-1.2. RUN CONDUIT FROM SPECIFIED LOCATION TO 6" ABOVE CEILING.

R35 PROVIDE DUPLEX RECEPTACLE FOR ICE MERCHANDISER AT 8" AFF 20 AMP CIRCUIT WIRED DIRECTLY TO DISTRIBUTION PANEL. DO NOT CONNECT TO EMS. VERIFY EXACT LOCATION AND TYPE OF ICE MERCHANDISER WITH TENANT SHEET F-1 PRIOR TO ROUGH-IN AND INSTALLATION.

R36 PROVIDE JUNCTION BOX FOR WALK-IN COOLER REMOTE TEMP SENSOR AT 5'-6" AFF WITH 1 - 3/4" CONDUIT FROM JUNCTION BOX TO 6" ABOVE FINISHED CEILING. RE: ARCH FOR LOCATION.

R37 PROVIDE JUNCTION BOX ABOVE CEILING WITH 6'-0" FLEX WP TO AUTOMATIC DOOR FOR ALARM VENDOR. CONDUIT SHALL BE COMPLETELY CONCEALED W/ PULLWIRE.

R38 MOUNT PRICE CHECKER, DUPLEX 2'-10" AFF ON COLUMN. (MOUNTED SIDEWAYS)

R39 PROVIDE 120V, 20A-1P CIRCUIT FOR ANTI-SWEAT CONTROL MODULATOR. COORDINATE WITH WALK-IN VENDOR.

R40 PROVIDE 1" EMT CONDUIT WITH PULL WIRE IN WALL FROM 84" AFF TO 12" ABOVE SUSPENDED CEILING. LOCATION DETERMINED BY FINAL MERCHANDISE PLAN. CENTER CALL BUTTON ON FRAGRANCE CASE.

ELECTRICAL LEGEND NOTES (RECEIVING AREA):

B1 LOCATION OF POWER COMPANY METER AND MAIN DISCONNECT SWITCH. SEE RISER DIAGRAM, SHEET 1/E-2.2, FOR FURTHER DETAILS.

B2 PROVIDE 20 AMP DUPLEX RECEPTACLE FOR FEED TO IRRIGATION CONTROL PANEL. PROVIDE 1 - 1-1/2" C. STUBBED UP TO 6" AFF AT CONTROL PANEL AND EXTEND 10'-0" FROM EXTERIOR OF BUILDING. COORDINATE EXACT LOCATION AND ELECTRICAL REQUIREMENTS WITH IRRIGATION EQUIPMENT INSTALLER PRIOR TO ANY WORK.

B3 PROVIDE JUNCTION BOX FOR STOCKROOM ACCESS ALARM AT 48" AFF FLUSH IN WALL WITH BLANK COVERPLATE. PROVIDE 1 - 3/4" C. FROM JUNCTION BOX TO 6" ABOVE FINISHED CEILING.

B4 INSTALL EDWARDS #1786B 24 VOLT PUSH BUTTON AT 48" AFG, AT RECEIVING DOOR.

B5 PROVIDE DUPLEX RECEPTACLE FOR STOCKROOM ACCESS ALARM AT 10'-6" AFF. DUPLEX TO BE LOCATED ABOVE DOOR IN RECEIVING AREA.

B6 PROVIDE EDWARDS #592 120V TO 24VAC TRANSFORMER FOR RECEIVING BELL/PUSH BUTTON. SECONDARY WIRING SHALL NOT ENTER THE SAME BOX AS PRIMARY WIRING. INSTALL TRANSFORMER AT 108" AFF.

B7 MOUNT PHOTO CELL TO THE CABINET OF RTU-1 AND WIRE TO THE CONTROL BOARD OF THIS UNIT.

B8 NOT USED.

B9 NOT USED.

B10 PROVIDE JUNCTION BOX AND CONDUIT FOR VRC PUSHBUTTON STATION COORDINATE WITH EQUIPMENT INSTALLER PRIOR TO ANY WORK.

B11 PROVIDE DEDICATED 20 AMP CIRCUIT FOR FIRE RISER J-BOX @ 18" AFF.

ELECTRICAL LEGEND NOTES (MISCELLANEOUS):

M1 WEATHERPROOF DUPLEX GFCI RECEPTACLE PROVIDED WITH ROOF TOP HVAC UNIT. CIRCUIT TO B-1 WITH 2#10, 1#10G, 3/4"C.

M2 SIGN CIRCUITS WILL BE 120V, 20 AMP. PROVIDE CONDUIT, JUNCTION BOXES AND WIRING FROM DISTRIBUTION PANEL TO BEHIND CANOPY FASCIA FOR BUILDING SIGNS. CHANNEL LETTERS AND SEAL TIGHT FLEXIBLE WHIPS FROM LETTERS TO BE SUPPLIED AND INSTALLED BY SIGN CONTRACTOR. ALL JUNCTION BOXES, CONDUIT, WIRING AND FINAL CONNECTIONS BETWEEN LETTERS BY THE SIGN CONTRACTOR. COORDINATE WITH SIGN CONTRACTOR. RE: SHEET A-4.1. PROVIDE LOCKABLE DISCONNECT AT PANEL PER N.E.C. ART. 600 FOR EACH CIRCUIT.

M3 PROVIDE DEDICATED DUPLEX RECEPTACLE FOR WATER COOLER AT LOCATION AS PER MANUFACTURER'S AND PLUMBING CONTRACTOR'S REQUIREMENTS.

M4 DISCONNECT SWITCH SCHEDULED AND SIZED INTEGRAL WITH ROOF TOP UNIT. REFERENCE MECHANICAL EQUIPMENT ELECTRICAL CONNECTION SCHEDULE ON SHEET E-3.1.

M5 NOT USED.

M6 PROVIDE JUNCTION BOX MOUNTED TO BOTTOM OF ROOF DECK FOR WATER LINE SELF-REGULATING HEAT TAPE. REFER TO P-1.1 FOR EXACT LOCATION OF 3/4" WATER LINE. REFER TO SHEET A-2.1 FOR ROOF PENETRATION INFORMATION. HEAT TAPE SHALL BE ADEQUATE LENGTH TO SPAN THE LENGTH OF THE EXPOSED WATERLINE. INSTALLATION OF THE HEAT TAPE WILL BE DETERMINED BY THE CVS PROJECT MANAGER AND SHALL BE VERIFIED PRIOR TO INSTALLATION.

M7 PROVIDE GFI RECEPTACLE FOR SATELLITE HEAT TRACE ON ROOF. TIE INTO 120V CIRCUIT SERVING CVS ROOF TOP UNIT RECEPTACLES. COORDINATE EXACT LOCATION WITH EQUIPMENT.

M8 ROOFTOP UNIT LIGHT FIXTURE AND SWITCH. SEE DETAIL 7/E1.3.

GENERAL NOTES (SHEET E-1.2 ONLY):

1. RE: CIVIL UTILITY PLAN FOR UTILITY INFORMATION.
2. ROUTE THE FOLLOWING CIRCUITS THROUGH THE ENERGY MANAGEMENT SYSTEM:
   A. CEILING RECEPTACLES
   B. WATER HEATERS
   C. LIGHTED FIXTURE VALENCES
3. RE: SHEET E-2.2 FOR MECHANICAL EQUIPMENT ELECTRICAL CONNECTION SCHEDULE. MECHANICAL EQUIPMENT INDICATED BY SYMBOL NOTE "(X)".
4. FOLLOW TENANT PANEL SCHEDULE.
5. PROVIDE EMPTY CONDUITS WITH PULLWIRES AND TAG PROPERLY.
6. TIE BACK ALL LOOSE WIRING (INCLUDING LOW VOLTAGE) IN AN ORDERLY FASHION.
7. DO NOT RUN LOW VOLTAGE WIRE OVER AC VOLTAGE WIRING OR LIGHT FIXTURES.
8. PROPERLY CONCEAL WIRING AT THE CHECKOUTS.
9. ROUTE CONDUITS SERVING COOLER BOXES ON THE INSIDE SURFACE OF BOX. KEEP CONDUIT PENETRATIONS THRU COOLER BOXES TO A MINIMUM. SEAL ALL PENETRATIONS USING SILICONE CAULK OR AN EXPANDING FOAM.
10. PROVIDE OUTDOOR ENCLOSURES NEMA RATED FOR THE LOCATION.
11. PROVIDE CONDUIT FOR ALL WIRING, INCLUDING BUT NOT LIMITED TO CONTROL, FIRE ALARM, POWER AND COMMUNICATIONS WIRING. COORDINATE INSTALLATION AND ROUTING REQUIREMENTS WITH APPROPRIATE INSTALLER(S).
12. PROVIDE SINGLE GANG PLASTER FLANGES FOR ALL TELEPHONE AND DATA OUTLET LOCATIONS AT SPECIFIED HEIGHT.
13. PROVIDE METAL CONDUIT UNDERFLOOR OR IN SLAB WITH CONCRETE-TIGHT COMPRESSION FITTINGS. WHERE PENETRATING FLOOR SLAB, STUB UP VERTICALLY 90 DEGREES.

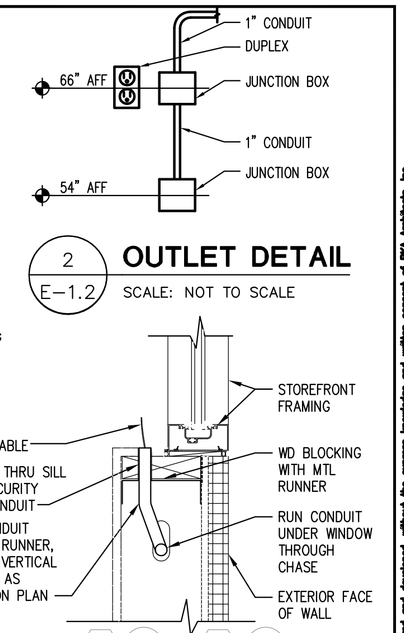

2 / E-1.2 **OUTLET DETAIL**
SCALE: NOT TO SCALE

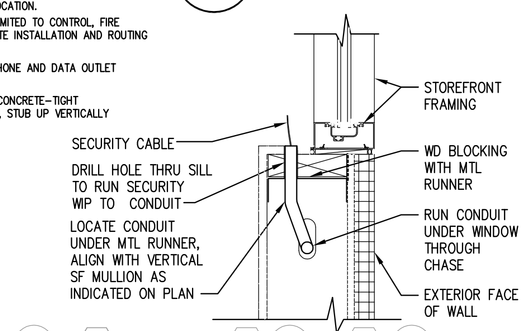

3 / E-1.2 **CAMERA DETAIL**
SCALE: 1 1/2" = 1'-0"

SYMBOL LEGEND

MOUNTING HEIGHT IS FROM FINISHED FLOOR TO CENTERLINE OF DEVICE OR RECEPTACLE. HEIGHT MAY VARY TO COINCIDE WITH BUILDING CONSTRUCTION.

SYMBOL	DESCRIPTION	MOUNTING HEIGHT
	DUPLEX RECEPTACLE	18" AFF
	QUAD RECEPTACLE	18" AFF
	DUPLEX RECEPTACLE WITH ISOLATED GROUND	18" AFF
GFI	GROUND FAULT CURRENT INTERRUPTER TYPE RECEPTACLE	
	SPECIAL RECEPTACLE AS NOTED	
	QUAD RECEPTACLE WITH ISOLATED GROUND	
	ABOVE CEILING DUPLEX RECEPTACLE	
J	JUNCTION BOX W/COVERPLATE - CEILING MOUNTED	
J	JUNCTION BOX W/COVERPLATE - WALL MOUNTED	
	PANELBOARD 120/208V	
	DISCONNECT SWITCH - HORSEPOWER RATED	
	PUSHBUTTON	5' AFF
A	2 FLUSH MOUNTED SINGLE GANG REDUCING RINGS. PROVIDE 1 - 1" CONDUIT (WITH PULLWIRE) IN WALL TO BOTTOM OF JOIST. RE: 2/E-1.2	54" AFF 66" AFF
B	FLUSH MOUNTED SINGLE GANG REDUCING RING. PROVIDE 1 - 1" CONDUIT (WITH PULLWIRE) IN WALL TO 6" ABOVE CEILING.	60" AFF
	DATA/PHONE LINE	
B	DOOR BUZZER	
NEUTRAL HOTS ISOLATED GROUND	CONDUIT CONCEALED IN WALL OR ABOVE CEILING. NOTE: A GREEN INSULATED EQUIPMENT GROUND SIZED PER N.E.C. IS NOT SHOWN BUT IS TO BE PROVIDED IN ALL RACEWAYS.	
	CONDUIT CONCEALED IN SLAB-IN GROUND OR UNDER FLOOR	
	CONDUIT EXPOSED	
AFF	ABOVE FINISHED FLOOR	
A.F.G.	ABOVE FINISHED GRADE	
FACP	FIRE ALARM CONTROL PANEL	
S	S.P.S.T. LIGHT SWITCH	48" AFF UON
S_P	S.P.S.T. LIGHT SWITCH WITH PILOT LIGHT	48" AFF UON
S_{ST}	60 MINUTE TIMER SWITCH (MARKTIME #90008)	48" AFF UON
S_S	OCCUPANCY SENSOR (NOVITAS #01-DL400)	48" AFF UON

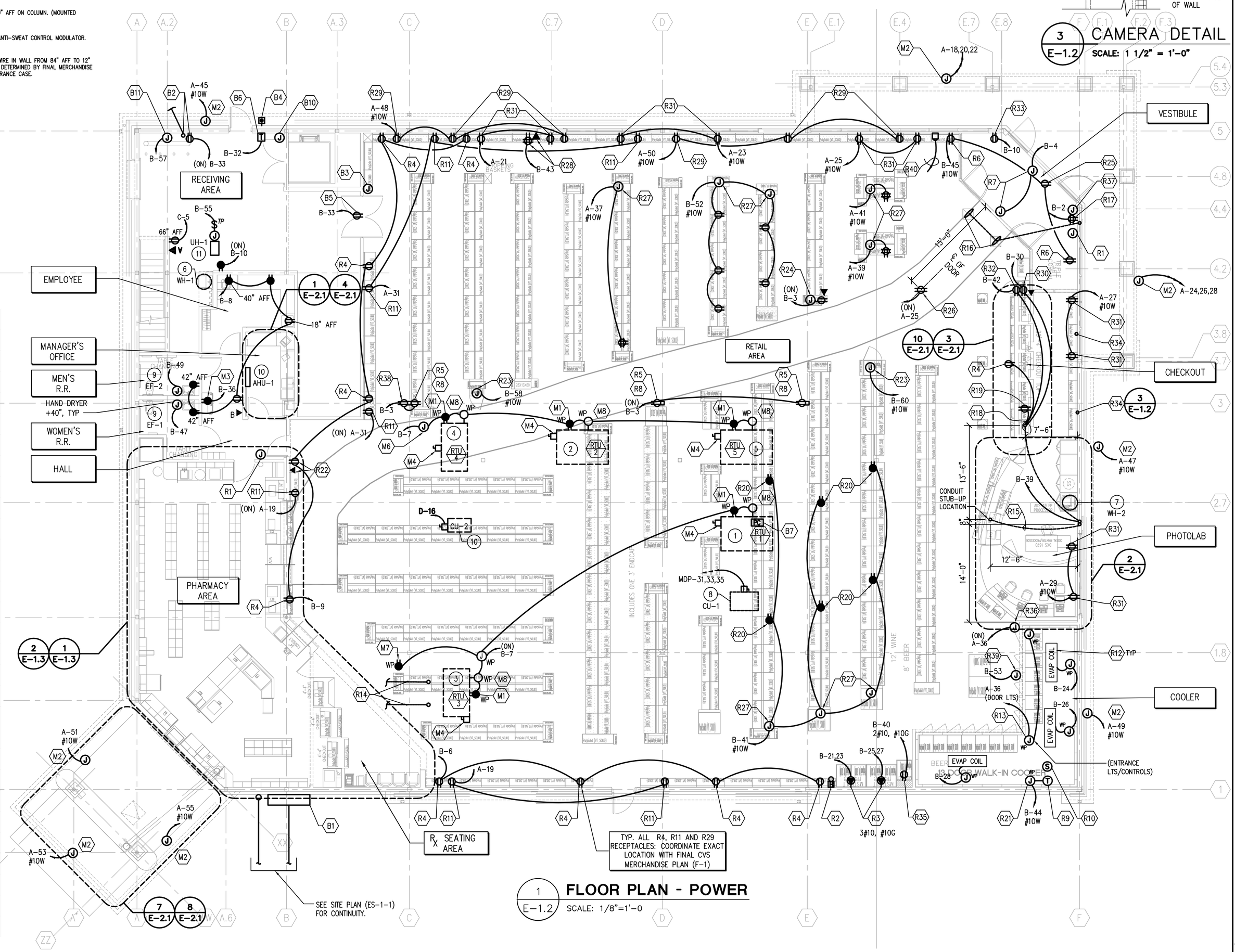

1 / E-1.2 **FLOOR PLAN - POWER**
SCALE: 1/8"=1'-0

BKA Architects, Inc.
Architecture + Interiors
142 Crescent Street
Brockton, MA 02302
tel : 508.583.5603
fax : 508.584.2914
e-mail : bka@bkaarchs.com

CONSULTANT:

R. W. Sullivan Engineering
HVAC , Electrical , Plumbing , Fire Protection , Code
The Schrafft Center, 529 Main St., Suite 203
Boston, Massachusetts 02129-1107
Phone: (617) 523-8227 Fax: (617) 523-8016
www.rwsullivan.com
RWS JOB # 80766.00

SEAL:

CVS/pharmacy

NEW

STORE NUMBER: 329

NORTHGATE PLAZA
91 AUBURN STREET
PORTLAND, MAINE

DEVELOPER:

A & D REALTY, LLC
5 MILITIA DRIVE
LEXINGTON, MA 02421

REVISIONS:

DRAWING BY:	HYZ
DATE:	8/31/09
JOB NUMBER:	209017

TITLE: POWER PLAN & LEGEND

SHEET NUMBER: E-1.2

COMMENTS: ISSUED FOR CONSTRUCTION

Copyright © 2009 by BKA Architects, Inc. The architectural plans, drawings, designs, specifications and other arrangements on this sheet are and shall remain the property of BKA Architects, Inc. No part thereof shall be copied, disclosed to others, or used in connection with any work or project, other than the specified project for which they have been prepared and developed, without the express knowledge and written consent of BKA Architects, Inc.

J:\2009\80766-00\0_Drawings\Plans-AutoCAD\Electrical\80766-00_E-1-2.dwg Sep 01 , 2009 - 1:44 pm HYZ