CVS/pharmacy

NORTHGATE PLAZA, 91 AUBURN STREET, PORTLAND, ME
CVS STORE #329

DRAWING INDEX

NOTE: DRAWING INDES MAY CHANGE BETWEEN ISSUANCES OF PHASE 1 & PHASE 2 DRAWINGS. NEWER DRAWINGS LISTED SHALL SUPERCEDE OLDER DRAWINGS PREVIOUSLY ISSUED.

PHASE 2 DRAWINGS, ISSUED 8/31/09	PHASE 1 DRAWINGS, ISSUED 8/7/09		
●	●	CS	COVER SHEET
		ARCHITECTURAL	
	●	D-1	DEMOLITION PLAN & NOTES
	●	D-1.2	DEMOLITION PLANS, ELEVATIONS, & DETAILS
●	●	AS-1	ARCHITECTURAL SITE PLAN
●		F-1(p)	PRELIMINARY MERCHANDISE PLAN
●		A-0.1	CODE INFORMATION & EXIT PLANS
●		A-1.1	FLOOR PLAN
●		A-1.2	MEZZANINE SECTIONS & DETAILS
●		A-1.2.1	MEZZANINE SECTIONS & DETAILS
●		A-1.2.2	MEZZANINE SECTIONS & DETAILS
●		A-1.2.3	ROOF ACCESS DORMER DETAILS
●		A-1.3	STAIR SECTION, PARTITION TYPES & DOOR SCHEDULE
●	●	A-1.3.1	MEZZANINE SECTIONS & DETAILS
●		A-1.4	SIDEWALK PLAN
●	●	A-1.5	CONSTRUCTION PLAN & NOTES
●		A-2.1	ROOF PLAN
●	●	A-2.1.1	ROOF PLAN & TRUSS PROFILES
●		A-2.2	ROOF DETAILS
●		A-3.1	REFLECTED CEILING PLANS & DETAILS
●		A-3.1.1	MEZZANINE REFLECTED CEILING PLAN
●		A-4.1	EXTERIOR ELEVATIONS
●		A-4.1.1	EXTERIOR TRIM DETAIL
	●	A-4.1.2	EXTERIOR ELEVATIONS & NOTES
	●	A-4.1.3	EXTERIOR TRIM DETAILS
●		A-4.2	INTERIOR ELEVATIONS – RETAIL AREA & DETAILS
●		A-5.0	BUILDING SECTIONS
●		A-5.0.1	METAL STUD TRUSS PROFILES
●		A-5.0.2	METAL STUD TRUSS PROFILES
●		A-5.1	FRONT CANOPY SECTIONS
●		A-5.1.1	FRONT CANOPY SECTIONS
●		A-5.1.3	DORMER ELEVATION, SECTION & DETAIL
●		A-5.1.4	WALL SECTIONS
●		A-5.1.5	TYP. WALL SECTIONS & DETAILS
●		A-5.1.6	WALL SECTIONS & DETAILS
	●	A-5.1.7	WALL SECTIONS & DETAILS
	●	A-5.1.8	WALL SECTIONS & DETAILS
	●	A-5.1.9	WALL SECTION, DESIGN CRITERIA CHART
●		A-5.2	COLUMN SECTIONS & DETAILS
●		A-5.3	DRIVE-THRU PLAN, SECTIONS & DETAILS
●		A-6.1	PHARMACY PLAN, SECTIONS & ELEVATIONS
●		A-6.2	ENLARGED PLANS & DETAILS
●		A-6.3	ENLARGED PLANS, DETAILS & ELEVATIONS
●		A-6.4	ENLARGED PLANS, DETAILS & ELEVATIONS
●		A-6.5	ELEVATIONS & DETAILS
	●	A-6.6	ENLARGED SECTIONS & DETAILS
●		A-7.1	DOOR & WINDOW DETAILS
●		A-7.2	SCHEDULES & DETAILS
●		A-7.2.1	WINDOW TYPES
●		A-8.1	SIGNAGE DETAILS
		STRUCTURAL	
●		S-1.1	FOUNDATION PLAN & SCHEDULES
	●	S-1.1.1	FOUNDATION PLAN & PART. FIRST FLOOR FRAMING PLANS
●		S-1.2	MEZZANINE FRAMING PLAN & SECTIONS
●		S-2.1	ROOF FRAMING PLAN & GENERAL NOTES
	●	S-2.2	ROOF FRAMING PLAN & GENERAL NOTES
●		S-3.1	FOUNDATION WALL SECTIONS & DETAILS
	●	S-3.1.1	FOUNDATION SECTIONS 2
●		S-3.2	STRUCTURAL WALL SECTIONS
●		S-3.3	STRUCTURAL WALL SECTIONS & BRACING ELEVATIONS
●		S-3.4	STRUCTURAL WALL SECTIONS
●		S-3.5	DRIVE-THRU SECTIONS & TYPICAL DETAILS
	●	S-3.6	SECTIONS & DETAILS
		MECHANICAL/PLUMBING	
●		M-0.1	MECHANICAL SCHEDULES AND DETAILS
●		M-1.1	HVAC FIRST & MEZZANINE FLOOR PLANS
●		M-1.2	HVAC ROOF PLAN
●		P-0.1	PLUMBING LEGENDS, NOTES & SCHEDULES
●		P-0.2	PLUMBING DETAILS
●		P-1.1	PLUMBING FIRST & MEZZANINE FLOOR PLANS
●		P-1.2	PLUMBING ATTIC PLAN
		FIRE PROTECTION	
●		FP-0.1	FIRE PROTECTION LEGEND & NOTES
●		FP-0.2	FIRE PROTECTION DETAILS
●		FP-1.1	FIRE PROTECTION MEZZANINE FLOOR PLANS
		ELECTRICAL	
●		ES-1.1	ELECTRICAL SITE PLANS
●		E-1.1	ELECTRICAL LIGHTING FLOOR PLANS
●		E-1.2	ELECTRICAL POWER PLAN & LEGEND
●		E-1.3	PHARMACY & UPPER FLOOR POWER PLANS
●		E-1.4	UNIWEB PHARMACY POWER INSTALLATION
●		E-1.5	ELECTRICAL ATTIC PLAN
●		E-2.1	ELECTRICAL DETAILS
●		E-2.2	ELECTRICAL SCHEDULES & RISER DIAGRAM
●		E-2.3	ELECTRICAL NOTES & EMS DIAGRAM
●		FA-1.1	FIRE ALARM FLOOR PLAN
●		FA-1.2	FIRE ALARM ATTIC PLAN

PROJECT INFORMATION

The building shall be in compliance with the

2003 INTERNATIONAL BUILDING CODE
2003 INTERNATIONAL MECHANICAL CODE
STATE OF MAINE PLUMBING CODE
2002 NATIONAL ELECTRIC CODE
2003 INTERNATIONAL FIRE CODE
2003 INTERNATIONAL ENERGY CONSERVATION CODE
1991 NFPA LIFE SAFETY CODE
ADA ACCESSIBILITY GUIDELINES

TEAM MEMBERS

LANDLORD:	**A & D REALTY, L.L.C.** 5 MILITIA DRIVE LEXINGTON, MA 02421	FRANK NORMANDIN TEL: (781) 862-9700 FAX: (781) 862-9070
ARCHITECT:	**BKA ARCHITECTS, INC** 142 CRESCENT ST BROCKTON, MA 02301	KEVIN PATON TEL: (508) 583-5603 FAX: (508) 584-2914
TENANT PROJECT MANAGER:	**CVS/PHARMACY, INC.** ONE CVS DRIVE WOONSOCKET, RI 02895	MARK ANDREWS TEL: (401) 770-7263 FAX: (401) 770-5238
CONTRACTOR:	**TRB DEVELOPMENT GROUP, INC.** 36 LONDONDERRY TURNPIKE HOOKSETT, NH	TIM BOISVERT TEL: (603) 669-8500 FAX: (603) 626-0939
CIVIL ENGINEER:	**APPLEDORE ENGINEERING, INC.** 177 CORPORATE DRIVE PORTSMOUTH, NH 03801	GRETCHEN YOUNG TEL: (603) 433-8818 FAX: (603) 433-8988
STRUCTURAL ENGINEER:	**C.A. PRETZER** 50 FREEWAY DRIVE CRANSTON, RI 02920	DAVE O'NEILL TEL: (401) 785-2690 FAX: (401) 461-9360
MECHANICAL/ PLUMBING ENGINEER:	**R.W. SULLIVAN** THE SCHRAFFT CENTER SUITE 203 BOSTON, MA 02129	GEORGE CHAN TEL: (617) 523-8227 FAX: (617) 523-8016
ELECTRICAL ENGINEER:	**R.W. SULLIVAN** THE SCHRAFFT CENTER SUITE 203 BOSTON, MA 02129	GEORGE CHAN TEL: (617) 523-8227 FAX: (617) 523-8016

SYMBOLS

1.5 — CENTERLINE OF COLUMN

3 / A-5.1 — ELEVATION MARK

23 / A-7.1 — ENLARGED PLAN DETAIL MARK

3 / A-5.1 — SECTION MARK 'SIM' – SIMILAR 'OH' – OPPOSITE HAND

ABBREVIATIONS

(ABBREVIATIONS SHOWN ARE NOT NECESSARILY USED ON THE DRAWINGS)

A	
AB	ANCHOR BOLT
A/C	AIR CONDITIONING
AC	ALTERNATING CURRENT
ACI	AMERICAN CONCRETE INSTITUTE
ADA	AMERICANS WITH DISABILITIES ACT
ADJ	ADJUSTABLE
AFF	ABOVE FINISHED FLOOR
AISC	AMERICAN INSTITUTE OF STEEL CONS.
ALUM	ALUMINUM
AMP	AMPERE, AMPS
ARCH	ARCHITECT, ARCHITECTURAL
ASHRAE	AMERICAN SOCIETY OF HEATING, REFRIGERATION AND AIR CONDITIONING ENGINEERS
ASTM	AMERICAN SOCIETY OF TESTING AND MATERIALS
B	
BLDG	BUILDING
BM	BEAM
BOTT	BOTTOM
BTU	BRITISH THERMAL UNIT
BOF	BOTTOM OF FOOTING
BRG	BEARING
C	
CF	CUBIC FEET
CD	CONDENSATE
CERTS	CERTIFICATES
CFM	CUBIC FEET PER MINUTE
CKT	CIRCUIT
℄	CENTERLINE
CLG	CEILING
CLR	CLEAR OR CLEARANCE
CMU	CONCRETE MASONRY UNIT
CO	CLEANOUT
COL	COLUMN
CONC	CONCRETE, CONCENTRIC
CONT	CONTINUOUS, CONTINUATION
COORD	COORDINATE
C (CONTINUED)	
CJ	CONTROL JOINT
CTR	CENTER
CV	CHECK VALVE
CW	COLD WATER
D	
DBL	DOUBLE
DC	DIRECT CURRENT
DEG	DEGREES
DEFS	DIRECT-APPLIED EXTERIOR FINISH SYSTEM
DIA	DIAMETER
DIM	DIMENSION
DL	DEADLOAD
DN	DOWN
DS	DOWNSPOUT
DTL	DETAIL
DWGS	DRAWINGS
E	
EA	EACH
EF	EXHAUST FAN
EJ	EXPANSION JOINT
ELEV	ELEVATION
EIFS	EXTERIOR INSULATION AND FINISH SYSTEM
ELEC	ELECTRICAL
EMBED	EMBEDMENT
EMP	EMPLOYEE
EMS	ENERGY MANAGEMENT SYSTEM
ENCL	ENCLOSURE
EOD	EDGE OF DECK
EQ	EQUAL
EQUIP	EQUIPMENT
EXGR	EXTERIOR GRADE
EXH	EXHAUST
EXP	EXPANSION
EXIST	EXISTING
EXT	EXTERNAL, EXTERIOR
EW	EACH WAY
EWC	ELECTRIC WATER COOLER
F	
FA	FIRE ALARM
FACP	FIRE ALARM CONTROL PANEL
FCO	FLOOR CLEANOUT
FD	FIRE DAMPER, FLOOR DRAIN
FIN	FINISH (ED)
FIXT	FIXTURE
FDN	FOUNDATION
FLG	FLANGE
FTG	FOOTING
FF	FINISHED FLOOR
FLR	FLOOR
FR	FIRE-RETARDANT-TREATED MATERIALS
FRP	FIBERGLASS REINFORCED PANEL
FT	FOOT, FEET
G	
GA	GAUGE
GALV	GALVANIZED
GC	GENERAL CONTRACTOR
GB	GRADE BEAM
GWB	GYPSUM WALL BOARD
GAB	GRADED AGGREGATE BASE
GYP	GYPSUM WALL BOARD
H	
HGT	HEIGHT
HORIZ	HORIZONTAL
HP	HORSEPOWER OR HIGH POINT
HTR	HEATER
HVAC	HEATING, VENTILATING AND AIR CONDITIONING
I	
ID	INSIDE DIAMETER
IE	INVERT ELEVATION
INT	INTERIOR
IN	INCH, INCHES
INSUL	INSULATION
J	
J-BOX	JUNCTION BOX
JT	JOINT
JST	JOIST
K	
K	KIPS (1000 LBS)
KV	KILOVOLT
KVA	KILOVOLT-AMPS
KW	KILOWATT
KWH	KILOWATT-HOUR
L	
LB	POUNDS
LF	LINEAR FEET
LL	LIVE LOAD, LANDLORD
LLH	LONG LEG HORIZONTAL
LLV	LONG LEG VERTICAL
LONG	LONGITUDINAL
LP	LOW POINT
LTG	LIGHTING
LWC	LIGHT WEIGHT CONCRETE
L	LENGTH
M	
MAX	MAXIMUM
MDP	MAIN DISTRIBUTION PANEL
MECH	MECHANICAL
MEZZ	MEZZANINE
MFR	MANUFACTURER
MIN	MINIMUM
MLO	MAIN LUGS ONLY
MO	MASONRY OPENING
MSB	MAIN SWITCHBOARD
MTD	MOUNTED
N	
N/A	NOT APPLICABLE
NEC	NATIONAL ELECTRICAL CODE
NEMA	NATIONAL ELECTRICAL MANUFACTURER'S ASSOC.
NF	NEAR FACE
N (CONTINUED)	
NFPA	NATIONAL FIRE PROTECTION ASSOCIATION
NIC	NOT IN CONTRACT
NL	NIGHT LIGHT
NO	NUMBER
NOM	NOMINAL
NTS	NOT TO SCALE
O	
OA	OUTSIDE AIR
OC	ON CENTER
OCC	OCCUPANTS
OF	OUTSIDE FACE
OD	OUTSIDE DIAMETER
OH	OPPOSITE HAND
OPNG	OPENING
OSB	ORIENTED STRAND BOARD
OSHA	OCCUPATIONAL SAFETY AND HEALTH ADMINISTRATION
P	
PAR	PARALLEL
PC	PIECE
PDU	POWER DISTRIBUTION UNIT
PH	PHASE
PL	PLATE
PLBG	PLUMBING
PNL	PANEL
PIV	POST INDICATOR VALVE
PSF	POUNDS PER SQUARE FOOT
PVC	POLYVINYL CHLORIDE
PWD	PLYWOOD
Q	
QTY	QUANTITY
R	
RA	RETURN AIR
RAD	RADIUS
RCP	REFLECTED CEILING PLAN,
RD	ROOF DRAIN
RE:	REFERENCE, REFER
REINF	REINFORCING
REQD	REQUIRED
RO	ROUGH OPENING
RPM	REVOLUTIONS PER MINUTE
RTU	ROOFTOP UNIT
S	
SCHED	SCHEDULED
SD	SMOKE DAMPER, STORM DRAIN
SECT	SECTION
S	SENSOR
SF	SQUARE FEET
SHT	SHEET
SIM	SIMILAR
SHT MTL	SHEET METAL
SPEC	SPECIFICATION
SQ	SQUARE
SS	STAINLESS STEEL, SANITARY SEWER
STD	STANDARD
STL	STEEL
STIFF	STIFFENER
STIR	STIRRUPS
STRUCT	STRUCTURAL
SUSP	SUSPENDED
SJ	SAW JOINT
T	
T&B	TOP AND BOTTOM
T/FTG	TOP OF FOOTING
TEMP	TEMPERATURE
THICK	THICKNESS
THRESH	THRESHOLD
TO	TOP OF
TOJ	TOP OF JOIST
TOS	TOP OF STEEL
T (CONTINUED)	
THRU	THROUGH
T	THERMOSTAT
TYP	TYPICAL
T	THICKNESS (STRUCT)
TS	TUBULAR STEEL (STRUCT)
TRS	TRUSS (STRUCT)
U	
UL	UNDERWRITERS LABORATORIES, INC.
UON	UNLESS OTHERWISE NOTED
UPS	UNINTERRUPTIBLE POWER SUPPLY
V	
V	VOLT
VA	VOLT-AMPERE
VERT	VERTICAL
VIF	VERIFY IN FIELD
VRC	VERTICAL RECIPROCATING CONVEYOR
VTR	VENT THROUGH ROOF
W	
W	WIDTH
W/	WITH
W/O	WITHOUT
WCO	WALL CLEANOUT
WC	WATER CLOSET
WD	WOOD
WL	WIND LOAD
WP	WEATHERPROOF
WO	WALL OPENING
WWF	WELDED WIRE FABRIC
WF	WIDE FLANGE (STRUCT)
X	
XFMR	TRANSFORMER
Y	
YD	YARD

GENERAL NOTES

1. CONTRACTORS SHALL NOT SCALE THESE DRAWINGS FOR CONSTRUCTION PURPOSES. IN THE EVENT OF OMISSION OF NECESSARY DIMENSIONS OR INFORMATION, CONTRACTOR SHALL NOTIFY ARCHITECT. FIGURED AND CALCULATED DIMENSION TAKES PRECEDENCE OVER SCALED MEASUREMENTS. DETAILED DRAWINGS AND LARGER SCALE DRAWINGS TAKE PRECEDENCE OVER SMALLER SCALE DRAWINGS. ALL PLAN DETAILS AND WALL SECTIONS ARE ASSUMED TO BE TYPICAL CONDITIONS UNLESS DETAILED OR NOTED OTHERWISE.
2. ALL FINISHED FLOOR ELEVATIONS RE: TO ARCHITECTURAL DRAWINGS ONLY. RE: CIVIL DRAWINGS FOR RELATIONSHIP TO PROJECT BENCHMARK(S).
3. VERIFY ALL DIMENSIONS, CONDITIONS, AND GRADES AT JOB SITE. ALL CONTRACTORS SHALL COORDINATE THEIR WORK WITH OTHER TRADES AND REPORT DISCREPANCIES, PRIOR TO THEIR CONSTRUCTION, TO THE ARCHITECT FOR REVIEW AND CLARIFICATION OR ACTION.
4. VERIFY SIZE, LOCATIONS AND CHARACTERISTICS OF ALL EQUIPMENT TO BE FURNISHED WITH MANUFACTURERS OR SUPPLIERS BEFORE BEGINNING CONSTRUCTION.
5. VERIFY SIZE AND LOCATION OF ALL OPENINGS FOR MECHANICAL AND ELECTRICAL EQUIPMENT AND RELATED WORK WITH CONTRACTORS INVOLVED AND EQUIPMENT TO BE FURNISHED. FOR CONSTRUCTION DETAILS NOT SHOWN, USE THE MANUFACTURER'S STANDARD DETAILS OR APPROVED SHOP DRAWINGS / DATA SHEETS IN ACCORDANCE WITH THE PROJECT SPECIFICATIONS.
6. CEILING HEIGHTS SCHEDULED ON THE ROOM FINISH SCHEDULE OR REFLECTED CEILING PLAN ARE TAKEN FROM THE FINISHED FLOOR ELEVATION.
7. ALL PLAN DIMENSIONS ARE TO FINISHED FACE OF FINISHED WALLS, FACE OF MASONRY, AND CENTERLINE OF COLUMNS, UNLESS NOTED OTHERWISE.
8. VERIFY ALL ELEVATIONS AND DIMENSIONS OF STRUCTURAL ELEMENTS WITH ARCHITECTURAL DRAWINGS. IN CASE OF CONFLICT, NOTIFY ARCHITECT. THE CONTRACTORS SHALL VERIFY ALL DIMENSIONS AND BE RESPONSIBLE FOR THEM. ALL DIMENSIONAL DISCREPANCIES ARE TO BE BROUGHT TO THE ATTENTION OF THE ARCHITECT.
9. ADD SUFFICIENT BLOCKING IN STUD WALLS TO SUPPORT ALL ITEMS OR EQUIPMENT SHOWN OR SPECIFIED TO BE ATTACHED TO THE WALLS. PROVIDE ADDITIONAL STRUCTURAL SUPPORT (ANGLES, CHANNELS, ETC.) WITHIN WALLS WHERE THE WEIGHT OF ATTACHED ITEMS OR EQUIPMENT IS TOO GREAT TO BE SUPPORTED BY METAL STUDS. PROVIDE BLOCKING FOR OWNER FURNISHED OR INSTALLED ITEMS.
10. PARTITIONS WHERE INDICATED BY SYMBOL ARE TO EXTEND AND SEAL AGAINST THE BOTTOM OF THE DECK ABOVE.
11. INSTALL METAL TRIM ON ALL GYPSUM BOARD EDGES ABUTTING OTHER MATERIALS OR STOPPING SHORT OF OTHER MATERIALS TO FORM A REVEAL OR RECESS.
12. USE METAL CORNER BEADS ON ALL GYPSUM BOARD EXTERIOR CORNERS.
13. COORDINATE WITH MECHANICAL CONTRACTOR FOR LOCATIONS OF ALL FLOOR DRAINS.
14. ALL PLUMBING WET WALLS (EXCLUDING CHASES) SHALL BE FRAMED WITH 6" METAL STUDS.
15. ALL PRODUCTS UTILIZED IN THIS CONSTRUCTION SHALL BE ASBESTOS FREE.
16. TRANSITION OF DIFFERENT FLOORING MATERIALS AT DOORWAYS SHALL OCCUR AT CENTERLINE OF DOORS TYPICALLY.
17. PAINT ALL WALL SURFACES, DOOR FRAMES, BULKHEADS AND CEILINGS IN ROOMS WHERE INDICATED ON ROOM FINISH SCHEDULE. PAINT BEHIND ALL MOVEABLE ITEMS ADJACENT TO WALLS RECEIVING PAINT AND RELOCATE ITEMS.
18. ALL WEATHER – EXPOSED SURFACES SHALL HAVE A WEATHER RESISTIVE BARRIER TO PROTECT THE INTERIOR WALL COVERING. EXTERIOR OPENINGS SHALL BE FLASHED IN SUCH A MANNER AS TO MAKE THEM WATERPROOF.

LOCATION MAP

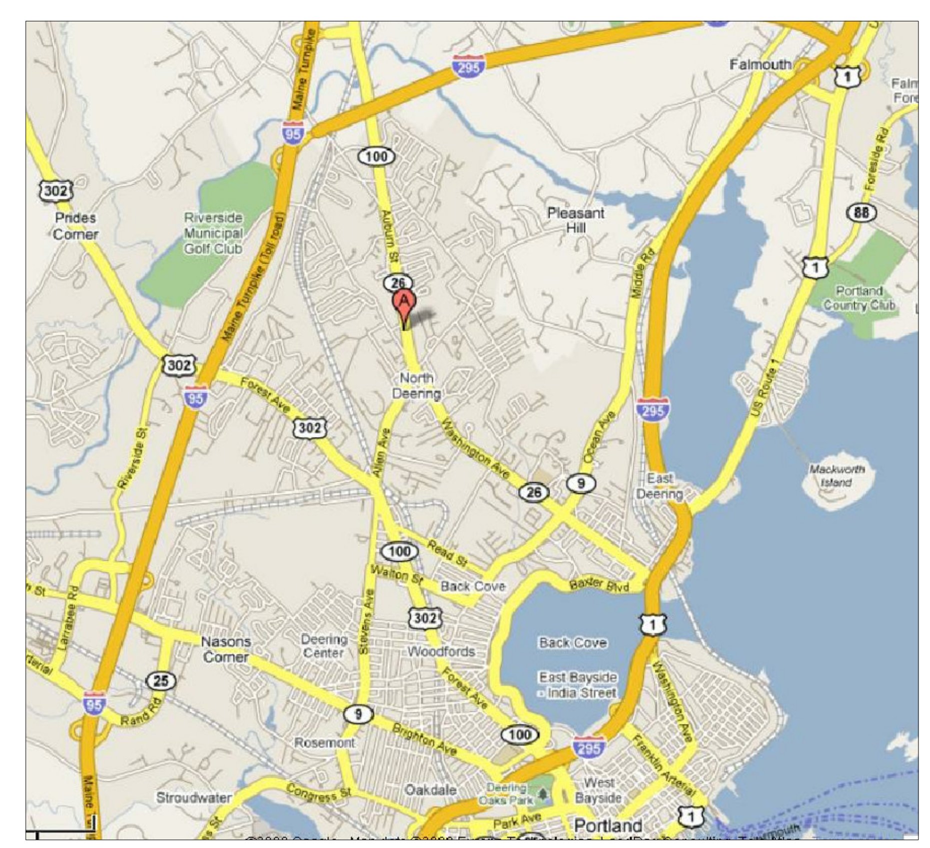

RESPONSIBILITY SCHEDULE (TURNKEY)

Revised: 02/19/09

DIV	DESCRIPTION	LANDLORD GC FURNISH	LANDLORD GC UNLOAD	LANDLORD GC INSTALL	CVS GC FURNISH	CVS GC UNLOAD	CVS GC INSTALL	REMARKS
1	GENERAL REQUIREMENTS							
	1. Permits and Fees	X						Includes building permit & tap fees and winter conditions if applicable and approved by CVS Project Manager and Director of Construction as an allowance.
2	SITE CONSTRUCTION							
	1. Landscaping	X	X	X				
	2. Outdoor Trash Recaptacle	X	X	X				
3	CONCRETE							
	1. Concrete Testing	X						Landlord GC to include concrete testing.
4	MASONRY	X	X	X				
5	METALS	X	X	X				
6	WOOD AND PLASTIC							
	1. Millwork (Includes Cart Corral)				X	X	X	
	2. Carpentry	X	X	X				
7	THERMAL MOISTURE PROTECTION	X	X	X				
8	DOORS AND WINDOWS							
	1. Drive-Thru Window	X	X	X				Landlord GC to provide complete installation of window unt. Coordinate all electrical requirements with vendor. Allow 6-8 weeks from time of order to site delivery. Call CVS National Account vendor for quote. All items are under Landlord GC's contract.
	2. Entrance Doors	X	X	X				Landlord GC to supply/install glass, glazing and perimeter caulking. Allow 6-8 weeks lead from time of order to site delivery/ installation. Call CVS National Account vendor for quote.
	3. Building Security Grilles	X	X	X				High security stores only. Confirm with CVS Project Manager.
	4. Rolling Service Door	X	X	X				Installation by product distributor. Landlord GC to provide metal angle jamb/head rough opening prior to installation. CVS to supply padlock.
	5. RX Dept. Security Grille	X	X	X				Landlord GC to provide necessary structural support. Actual product install is by CVS National Account vendor under Landlords GC's contract.
9	FINISHES							
	1. Carpet Tile	X	X	X				Landlord GC to obtain quote from CVS National Account vendor. Carpet price will include installation and adhesive. CVS responsible for Drive Aisle install through National Account vendor after gondola installation.
	2. VCT	X	X	X				
	3. Wall Covering	X	X	X				
10	SPECIALTIES							
	1. Bulletin Board	X	X	X				
	2. Pylon Signs Electronic Message Board (EMB)				X	X	X	Landlord GC to supply electrical, including conduits for EMB to each pylon per approved town/city site plan. CVS National Account vendor is responsible for foundation, EMB and final electrical connections. All items are under the Landlord GC's contract.
	3. Monument Signs Electronic Message Board (if applicable)				X	X	X	Landlord GC to supply electrical, including conduits for EMB to each monument (if applicable) per approved town/city site plan. CVS National Account vendor is responsible for foundation, EMB and final electrical connections. All items are under the Landlord GC's contract.
	4. Drive-Thru Signs				X	X	X	See Site Plan.
	5. Building Signs				X	X	X	Landlord GC to supply electrical and plywood backing. CVS National Account vendor is responsible for final electrical connections. All items are under the Landlord GC's contract.
	6. Interior Signs				X	X	X	
	7. Fire Extinguishers	X	X	X				
	8. Toilet Accessories	X	X	X				
	9. UNIWEB/ Early Release Lozier				X	X	X	
11	EQUIPMENT							
	1. Safe				X	X	X	
	2. Compactor	X	X	X				Landlord GC to furnish and install compactor door and frame for thru-wall chute, mag-switch and start/stop station.
	3. Compactor Pad/ Enclosure	X		X				
	4. Dumpster				X	X	X	
	5. Dumpster Pad/ Enclosure	X		X				
	6. Walk-In Cooler	X	X	X				Landlord GC to purchase from CVS National Account vendor.
	7. Refrigerators/Freezers				X	X	X	Electrical outlet by Landlord GC. CVS to provide/ CVS vendor to install.
12	FURNISHINGS							
	1. Steel Gondola				X	X	X	Note: Install is dictated by local labor union issues. In union areas the Landlord's GC is responsible for the install. In non-union areas, CVS Store Set-up is responsible. There are exceptions therefore please confirm with CVS Project Manager. See merchandise plan.
	2. Wall Strapping	X	X	X				Landlord GC to provide wall strapping along perimeter walls per CVS merchandise plan.
13	SPECIAL CONSTRUCTION							
	1. Fire Alarm	X	X	X				Landlord GC to purchase from CVS National Account vendor.
14	CONVEYING SYSTEMS							
	1. Vertical Lift or Conveyor Unit	X	X	X				
	2. Pneumatic Tube Delivery System	X	X	X				Installed by CVS National Account vendor. Under Landlord's GC contract.
15	MECHANICAL / PLUMBING							
	1. Water Meter	X	X	X				Includes tap fees.
	2. Irrigation Meter	X	X	X				Includes tap fees.
	3. Gas Meter	X	X	X				Includes tap fees.
	4. Water Purification System	X	X	X				Landlord GC to purchase from CVS National Account vendor.
16	ELECTRICAL							
	1. Site Lighting	X	X	X				Landlord GC to purchase from CVS National Account vendor. Includes poles, fixtures and circuiting.
	2. Building Lighting	X	X	X				Landlord GC to purchase from CVS National Account vendor. Includes interior and exterior lighting.
	3. Compactor Disconnect	X	X	X				Coordinate with compator location.
	4. EAS and POS Cabling	X	X	X				Landlord GC to purchase from CVS National Account vendor. CVS to connect equipement. All conduit by Landlord GC.
	5. Telephone Conduit				X	X	X	All conduit by Landlord GC from street to building with pull string rquirements from telephone company. Landlord GC to install plywood backer board in electrical area per CVS construction plans. CVS to order phone service.
	6. Telephone System				X	X	X	CVS to connect to equipment. All conduit by Landlord GC.
	7. EMS Relay Panel	X	X	X				Landlord GC to purchase from CVS National Account vendor. Landlord GC to install cabinet.
	8. Pylon/ Monument Signs				X	X	X	Landlord GC to supply electrical. CVS National Account vendor is responsible for foundation and final electrical connections. All items are under the Landlord's GC contract.
	9. Drive-Thru Signs				X	X	X	
	10. Building Signs				X	X	X	Landlord GC to supply electrical and plywood backing. CVS National Account vendor is responsible for final electrical connections. All items are under the Landlord's GC contract.
	11. EMS System Connection	X	X	X				Landlord GC to purchase from CVS National Account vendor. Landlord GC to install relay panel. Final programming by CVS.
	12. Switchgear and Disconnects	X	X	X				Landlord GC to purchase from CVS National Account vendor. Main contactor connections and installation by Landlord GC.
	13. Electrical Meter	X	X	X				
	14. Burglar Alarm/ CCTV				X	X	X	Landlord GC to purchase from CVS National Account vendor. Landlord GC to furnish all conduits/ outlets.

BKA Architects, Inc.
Architecture + Interiors
142 Crescent Street
Brockton, MA 02302
tel : 508.583.5603
fax : 508.584.2914
e-mail : bka@bkaarchs.com

CONSULTANT:

SEAL:

CVS/pharmacy

NEW

STORE NUMBER: 329
NORTHGATE PLAZA
91 AUBURN STREET
PORTLAND, MAINE

DEVELOPER:
A & D REALTY, LLC
5 MILITIA DRIVE
LEXINGTON, MA 02421

REVISIONS:

DRAWING BY: RTK
DATE: 8/31/09
JOB NUMBER: 209017
TITLE: COVER SHEET
SHEET NUMBER: CS
COMMENTS: ISSUED FOR CONSTRUCTION

Copyright © 2006 by BKA Architects, Inc. The architectural plans, drawings, designs, specifications and other arrangements on this sheet are and shall remain the property of BKA Architects, Inc. No part thereof shall be copied, disclosed to others, or used in connection with any work or project, other than the specified project for which they have been prepared and developed, without the express knowledge and written consent of BKA Architects, Inc.

P:\Retail_Proj\209017\CVS #329\Architectural\Sheets\209017_COVER_TURNKEY.dwg Sep 02 , 2009 - 9:05 am RKUHN

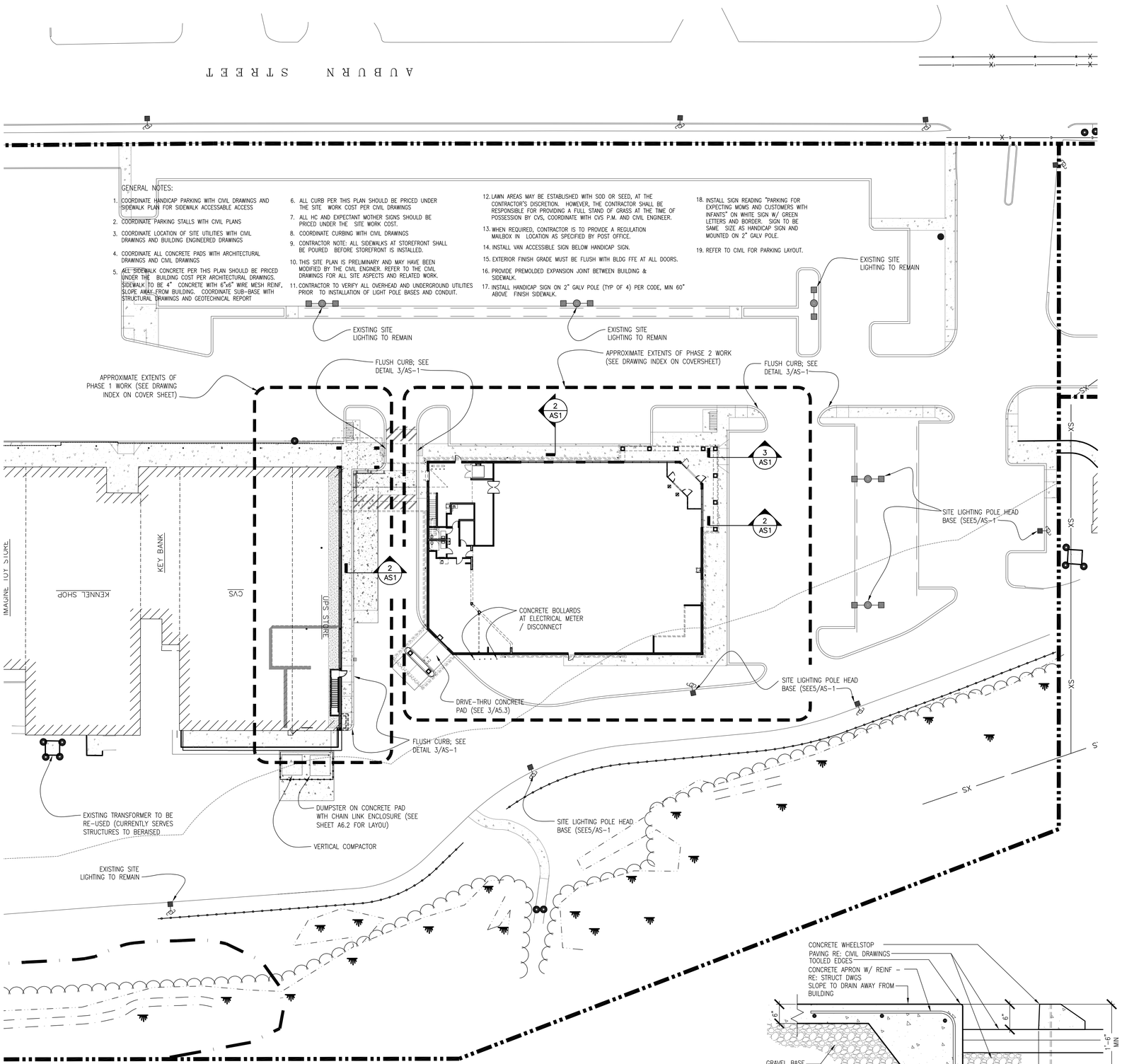

GENERAL NOTES:

1. COORDINATE HANDICAP PARKING WITH CIVIL DRAWINGS AND SIDEWALK PLAN FOR SIDEWALK ACCESSABLE ACCESS
2. COORDINATE PARKING STALLS WITH CIVIL PLANS
3. COORDINATE LOCATION OF SITE UTILITIES WITH CIVIL DRAWINGS AND BUILDING ENGINEERED DRAWINGS
4. COORDINATE ALL CONCRETE PADS WITH ARCHITECTURAL DRAWINGS AND CIVIL DRAWINGS
5. ALL SIDEWALK CONCRETE PER THIS PLAN SHOULD BE PRICED UNDER THE BUILDING COST PER ARCHITECTURAL DRAWINGS. SIDEWALK TO BE 4" CONCRETE WITH 6"x6" WIRE MESH REINF, SLOPE AWAY FROM BUILDING. COORDINATE SUB-BASE WITH STRUCTURAL DRAWINGS AND GEOTECHNICAL REPORT
6. ALL CURB PER THIS PLAN SHOULD BE PRICED UNDER THE SITE WORK COST PER CIVIL DRAWINGS
7. ALL HC AND EXPECTANT MOTHER SIGNS SHOULD BE PRICED UNDER THE SITE WORK COST.
8. COORDINATE CURBING WITH CIVIL DRAWINGS
9. CONTRACTOR NOTE: ALL SIDEWALKS AT STOREFRONT SHALL BE POURED BEFORE STOREFRONT IS INSTALLED.
10. THIS SITE PLAN IS PRELIMINARY AND MAY HAVE BEEN MODIFIED BY THE CIVIL ENGINER. REFER TO THE CIVIL DRAWINGS FOR ALL SITE ASPECTS AND RELATED WORK.
11. CONTRACTOR TO VERIFY ALL OVERHEAD AND UNDERGROUND UTILITIES PRIOR TO INSTALLATION OF LIGHT POLE BASES AND CONDUIT.
12. LAWN AREAS MAY BE ESTABLISHED WITH SOD OR SEED, AT THE CONTRACTOR'S DISCRETION. HOWEVER, THE CONTRACTOR SHALL BE RESPONSIBLE FOR PROVIDING A FULL STAND OF GRASS AT THE TIME OF POSSESSION BY CVS, COORDINATE WITH CVS P.M. AND CIVIL ENGINEER.
13. WHEN REQUIRED, CONTRACTOR IS TO PROVIDE A REGULATION MAILBOX IN LOCATION AS SPECIFIED BY POST OFFICE.
14. INSTALL VAN ACCESSIBLE SIGN BELOW HANDICAP SIGN.
15. EXTERIOR FINISH GRADE MUST BE FLUSH WITH BLDG FFE AT ALL DOORS.
16. PROVIDE PREMOLDED EXPANSION JOINT BETWEEN BUILDING & SIDEWALK.
17. INSTALL HANDICAP SIGN ON 2" GALV POLE (TYP OF 4) PER CODE, MIN 60" ABOVE FINISH SIDEWALK.
18. INSTALL SIGN READING "PARKING FOR EXPECTING MOMS AND CUSTOMERS WITH INFANTS" ON WHITE SIGN W/ GREEN LETTERS AND BORDER. SIGN TO BE SAME SIZE AS HANDICAP SIGN AND MOUNTED ON 2" GALV POLE.
19. REFER TO CIVIL FOR PARKING LAYOUT.

1 / AS-1 ARCHITECTURAL SITE PLAN
SCALE: 1" = 50'-0"

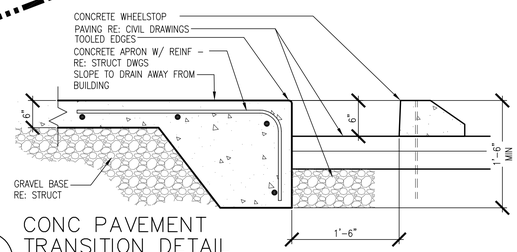

2 / AS-1 CONC PAVEMENT TRANSITION DETAIL
SCALE: 1" = 1'-0"

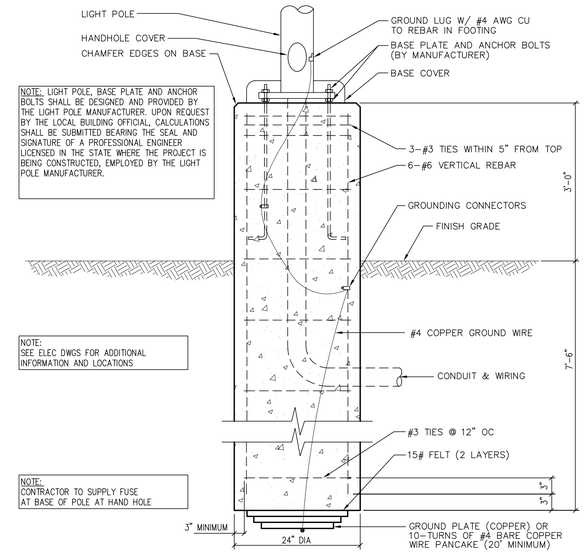

NOTE: LIGHT POLE, BASE PLATE AND ANCHOR BOLTS SHALL BE DESIGNED AND PROVIDED BY THE LIGHT POLE MANUFACTURER. UPON REQUEST BY THE LOCAL BUILDING OFFICIAL, CALCULATIONS SHALL BE SUBMITTED BEARING THE SEAL AND SIGNATURE OF A PROFESSIONAL ENGINEER LICENSED IN THE STATE WHERE THE PROJECT IS BEING CONSTRUCTED, EMPLOYED BY THE LIGHT POLE MANUFACTURER.

NOTE: SEE ELEC DWGS FOR ADDITIONAL INFORMATION AND LOCATIONS

NOTE: CONTRACTOR TO SUPPLY FUSE AT BASE OF POLE AT HAND HOLE

5 / AS-1 SITE LIGHTING BASE DETAIL
NO SCALE

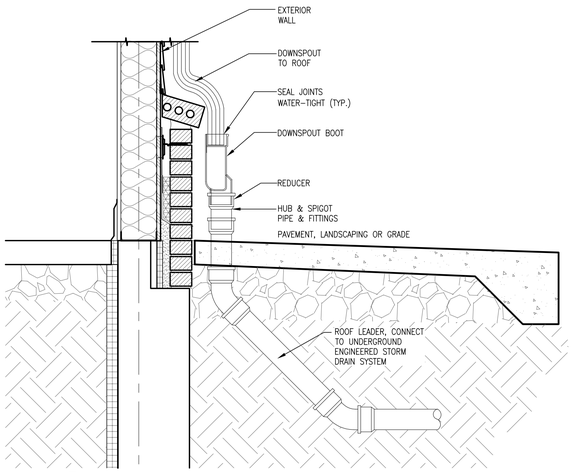

4 / AS-1 LEADER BOOT DETAIL
SCALE: 1"=1'-0"

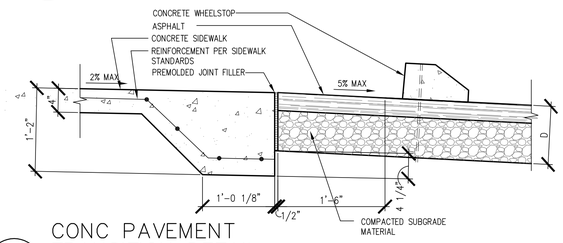

3 / AS-1 CONC PAVEMENT TRANSITION DETAIL
SCALE: 1" = 1'-0"

BKA Architects, Inc.
Architecture + Interiors
142 Crescent Street
Brockton, MA 02302
tel : 508.583.5603
fax : 508.584.2914
e-mail : bka@bkaarchs.com

CONSULTANT:

SEAL:

CVS/pharmacy

NEW

STORE NUMBER: 329

NORTHGATE PLAZA
91 AUBURN STREET
PORTLAND, MAINE

DEVELOPER:

A & D REALTY, LLC
5 MILITIA DRIVE
LEXINGTON, MA 02421

REVISIONS:

DRAWING BY: RTK
DATE: 8/31/09
JOB NUMBER: 209017
TITLE: ARCHITECTURAL SITE PLAN & DETAILS
SHEET NUMBER: AS-1

COMMENTS:
ISSUED FOR CONSTRUCTION

Copyright © 2009 by BKA Architects, Inc. The exclusive plans, drawings, designs, specifications and other arrangements in this sheet are and shall remain the property of BKA Architects, Inc. No part thereof shall be copied, disclosed to others, or used in connection with any work or project, other than the specific project for which they have been prepared and developed, without the express knowledge and written consent of BKA Architects, Inc.

P:\Retail_Proj\209017\CVS #329\Architectural\Sheets\209017_as1.dwg Sep 02 , 2009 - 9:06 am RKUHN

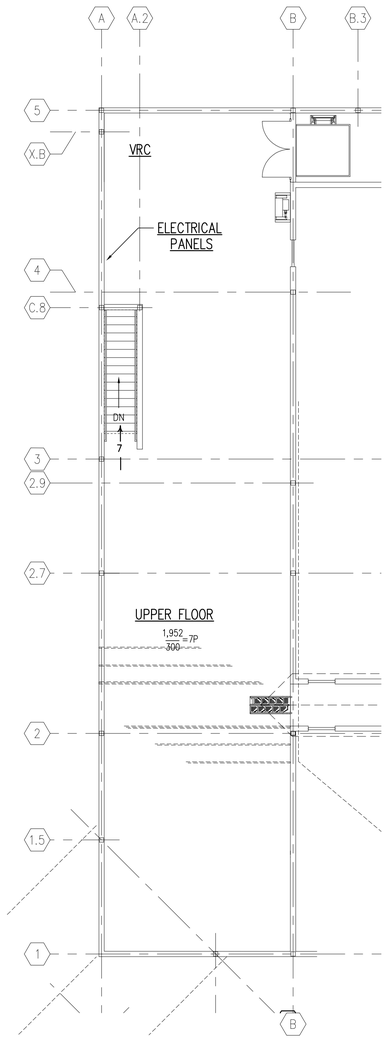

2 / A-0.1 UPPER FLOOR EXIT PLAN
SCALE: 1/8" = 1'-0"

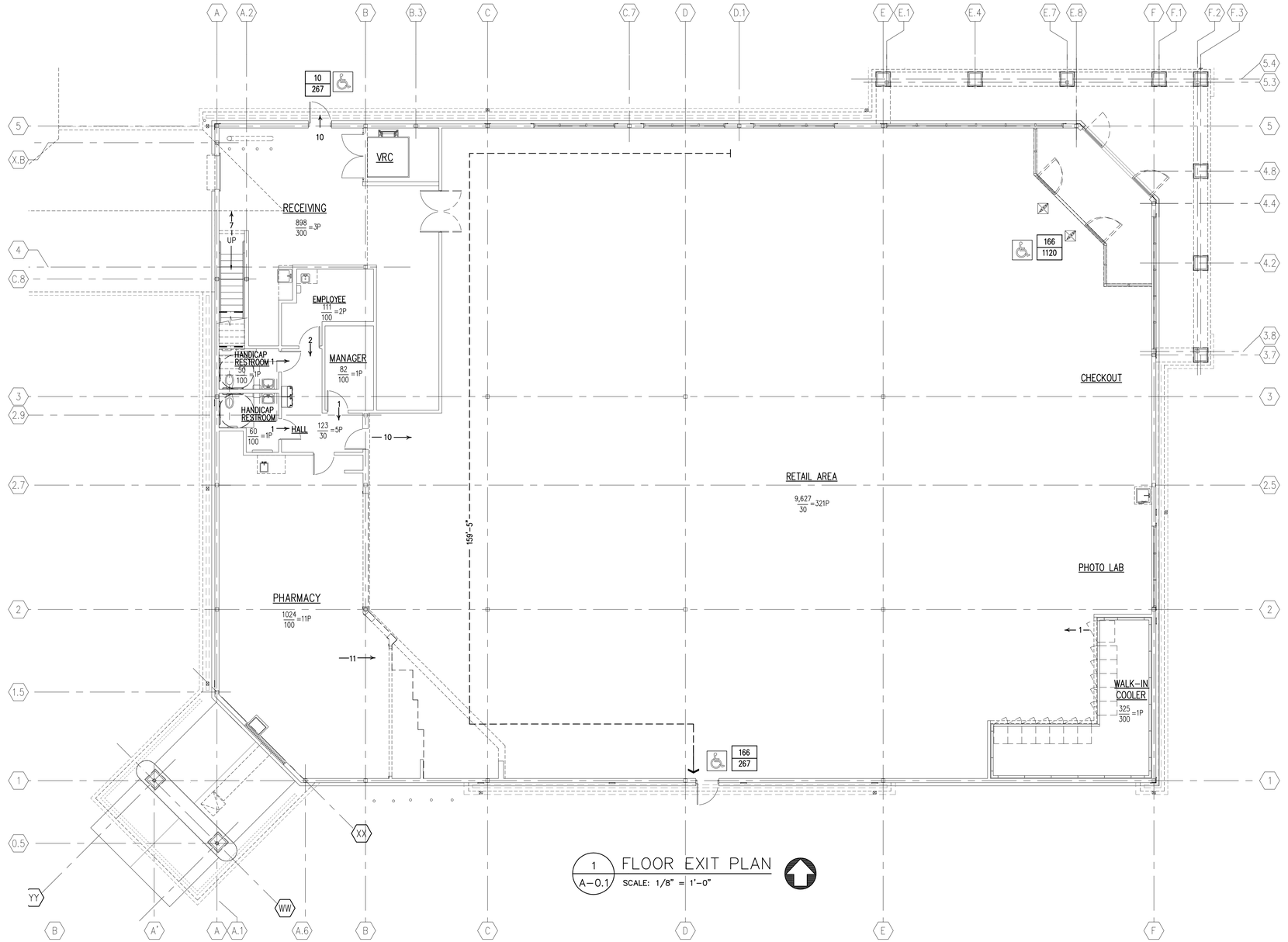

1 / A-0.1 FLOOR EXIT PLAN
SCALE: 1/8" = 1'-0"

SYMBOL LEGEND

	ACCESSIBLE AREA OR EXIT
875 / 20 = 43P — AREA / S.F./OCCUPANT	ROOM OCCUPANCY LOAD
EXIT CAPACITY	
43 — ACTUAL	
240 — ALLOWABLE	
15	DIRECTION OF TRAVEL WITH ACCUMULATED OCCUPANCY LOAD
250'	MAXIMUM TRAVEL DISTANCE FROM FURTHEST POINT (250 FEET=MAXIMUM ALLOWABLE TRAVEL DISTANCE IN SPRINKELERED BUILDING)
	(1 HR) ONE HOUR RATED WALL (TIGHT TO DECK ABOVE UNLESS NOTED OTHERWISE) UL DESIGN #U465

CODE INFORMATION

(BASED ON INTERNATION BUILDING CODE 2003 EDITION)
(WITH STATE OF MAINE AMENDMENTS)

1. USE AND OCCUPANCY CLASSIFICATION (302.0)
   MERCANTILE GROUP – M (309)
   STORAGE GROUP – S (311)
   Nonseparated uses (302.3.2)
2. CONSTRUCTION TYPE:
   TYPE II–B CONSTRUCTION (SPRINKLED)
3. BUILDING HEIGHT (503.0)
   Allowable Height (story/feet) 4 STORY/ 55'–0"
   Height Modification w/ sprinkler system (504.2)
   Allowable height increased by 20'. 75'–0"
   Allowable stories increased by one 5 STORIES
   Actual Height (stories/feet) 1 STORIES/32'–5"
4. BUILDING AREA (503.0)
   Allowable Building Area per Floor 12,500

4. BUILDING AREA (Continued)

Building Floor Area	12,468
Total Building Area	12,468
Mezzanine Storage Area	1,952
Total Building Area	14,420

Allowable Area Increases W/ excess street frontage (506.1)
Allowable Area Increased per Floor x (2%x75%) 150% 18,750

Allowable Area Increases W/ sprinkler system (506.3)
Allowable Area Increased per Floor x 200% 25,000
Allowable Increase Total Building Area 56,250

5. FIRE–RESISTANCE RATING REQUIREMENTS FOR BUILDING ELEMENTS (Table 601):
   A. Structural frame (including columns, girders, trusses): 0 Hr(s)
   B. Bearing walls (interior & exterior) 0 Hr(s)
   C. Nonbearing walls & partitions (interior & exterior): 0 Hr(s)
   D. Floor construction (including supporting beams & joists): 0 Hr(s)
   E. Roof construction (including supporting beams & joists): 0 Hr(s)

6. DESIGN OCCUPANT LOAD (1004.1)

Retail/Sales (30 sf/occ.):	9,627 sf /321	occ.
Pharmacy (100 sf/occ.):	1,054 sf / 11	occ.
Receiving /Cooler (300 sf/occ.):	1,191sf / 4	occ.
Manager (100 sf/occ.):	84 sf / 1	occ.
Restrooms/Employee (30 sf/occ.):	348 sf / 12	occ.
Upper Floor Storage (300 sf/occ.):	1,952 sf / 7	occ.
TOTAL OCCUPANT LOAD		356 occ.

7. EXITS
   A. Doors (1005):
   Required 356 x 0.15" = 53.40"
   Provided 221"
   B. Min. Door Width (1008.1.1): 32" Clear
   C. Stairways Min. Width (1009.1): 36"
   D. Number of Exits (1014.1)

From each Floor	No. Required	No. Provided
Ground Floor	2	3
Upper Floor	1	1

   E. Travel Distance (1015.1)
   Allowable 250'–0" L.F.
   Provided 159'–5" L.F.
   F. Min. Corridor Width (1016.2): 44"
   G. Max. Dead End Corridor Distance (1016.3): 20'–0"

8. FIRE PROTECTION SYSTEMS

A. Sprinkler System (903.2.6):	Required Yes	Provided Yes
B. Standpipe System (905):	Required No	Provided No
C. Fire & Smoke Detection (907):	Required No	Provided No
D. Fire Alarm (907.2.7):	Required No	Provided No
E. Smoke Vents (910):	Required No	Provided No
F. Portable Fire Extinguisher:	Required Yes	Provided Yes

9. VERTICAL RECIPROCATING CONVEYOR (VRC)
   A. Vertical Reciprocating Conveyor (VCR) governed by ASME B20.1.

10. MINIMUM NUMBER OF PLUMBING FACILTIES (Table 2902.1):

Total Occupancy Load:	359 (180 Men/179 Women)
Required:	Provided:
Water Closets (1 per 500):	1 Men's / 1 Women's
Lavatories (1 per 750):	1 Men's / 1 Women's
Drinking Fountains (1 per 1,000):	2 Drinking Fountains
Service Sink (1 required):	1 Service Sink

11. ACCESSIBILITY (1109.12.2):
   Required Number of Checkout Aisles to be Accessible.

	Total No.	Min. No. Required	No. Provided
Customer Service	6	2	6
Pharmacy	4	1	4

BKA Architects, Inc.
Architecture + Interiors
142 Crescent Street
Brockton, MA 02302
tel : 508.583.5603
fax : 508.584.2914
e-mail : bka@bkaarchs.com

CONSULTANT:

SEAL:

CVS/pharmacy

NEW

STORE NUMBER: 329

NORTHGATE PLAZA
91 AUBURN STREET
PORTLAND, MAINE

DEVELOPER:

A & D REALTY, LLC
5 MILITIA DRIVE
LEXINGTON, MA 02421

REVISIONS:

DRAWING BY: RTK
DATE: 8/31/09
JOB NUMBER: 209017
TITLE: CODE INFORMATION & EXIT PLANS
SHEET NUMBER: A–0.1

COMMENTS:
ISSUED FOR CONSTRUCTION

Copyright © 2006 by BKA Architects, Inc. The architectural plans, drawings, designs, specifications and other arrangements in this, these and prior minds the property of BKA Architects, Inc. No part thereof shall be copied, disclosed to others, or used in connection with any work or project, other than the specified project for which they have been prepared and delivered, without the express knowledge and written consent of BKA Architects, Inc.

P:\Retail_Proj\209017\CVS #329\Architectural\Sheets\209017_a01.dwg Sep 02 , 2009 - 9:08 am RKUHN

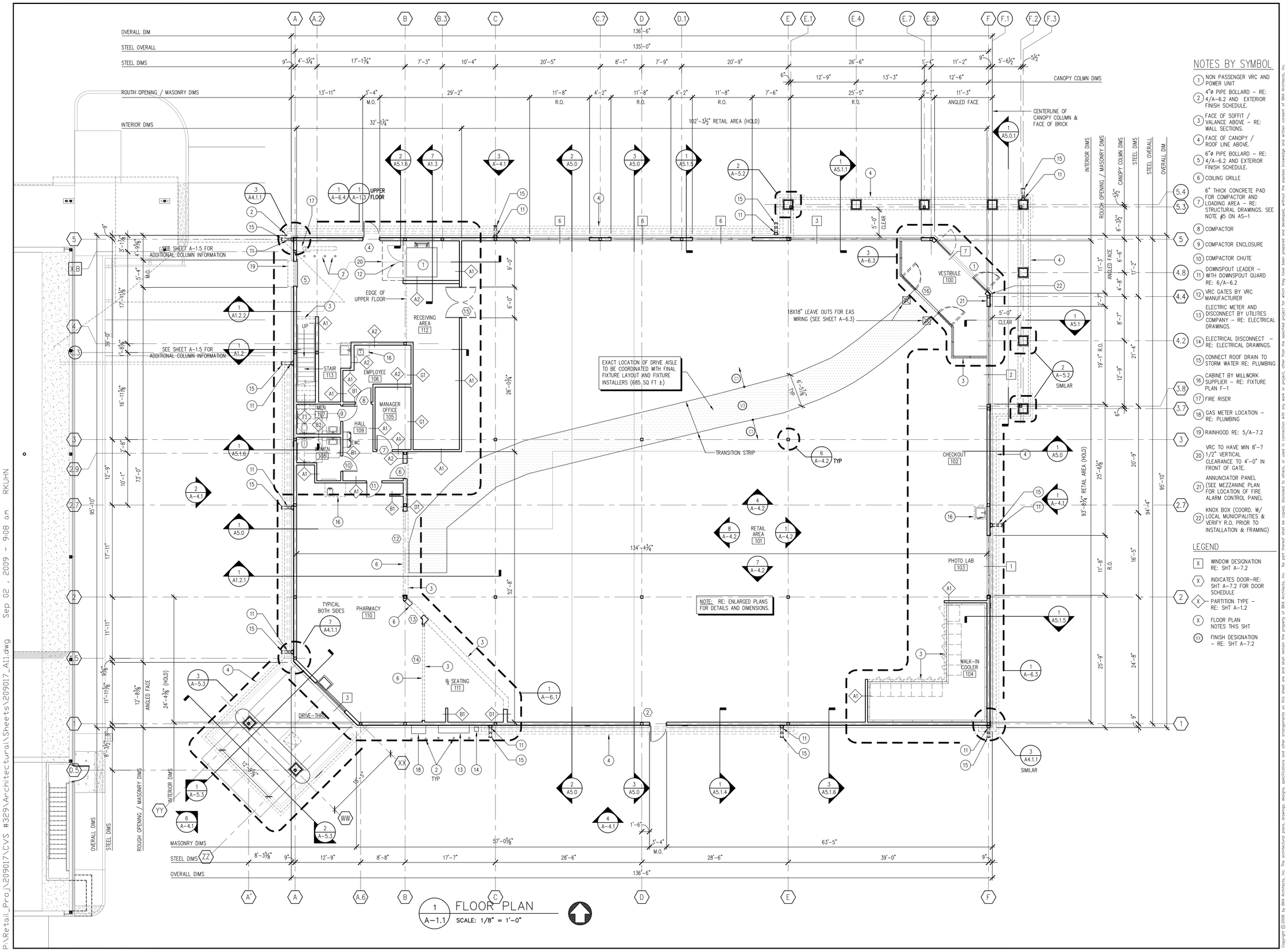

1 A-1.1 FLOOR PLAN
SCALE: 1/8" = 1'-0"

NOTES BY SYMBOL

1. NON PASSENGER VRC AND POWER UNIT
2. 4"ø PIPE BOLLARD – RE: 4/A-6.2 AND EXTERIOR FINISH SCHEDULE.
3. FACE OF SOFFIT / VALANCE ABOVE – RE: WALL SECTIONS.
4. FACE OF CANOPY / ROOF LINE ABOVE.
5. 6"ø PIPE BOLLARD – RE: 4/A-6.2 AND EXTERIOR FINISH SCHEDULE.
6. COILING GRILLE
7. 6" THICK CONCRETE PAD FOR COMPACTOR AND LOADING AREA – RE: STRUCTURAL DRAWINGS. SEE NOTE #5 ON AS-1
8. COMPACTOR
9. COMPACTOR ENCLOSURE
10. COMPACTOR CHUTE
11. DOWNSPOUT LEADER – WITH DOWNSPOUT GUARD RE: 6/A-6.2
12. VRC GATES BY VRC MANUFACTURER
13. ELECTRIC METER AND DISCONNECT BY UTILITIES COMPANY – RE: ELECTRICAL DRAWINGS.
14. ELECTRICAL DISCONNECT – RE: ELECTRICAL DRAWINGS.
15. CONNECT ROOF DRAIN TO STORM WATER RE: PLUMBING
16. CABINET BY MILLWORK SUPPLIER – RE: FIXTURE PLAN F-1
17. FIRE RISER
18. GAS METER LOCATION – RE: PLUMBING
19. RAINHOOD RE: 5/A-7.2
20. VRC TO HAVE MIN 8'-7 1/2" VERTICAL CLEARANCE TO 4'-0" IN FRONT OF GATE.
21. ANNUNCIATOR PANEL (SEE MEZZANINE PLAN FOR LOCATION OF FIRE ALARM CONTROL PANEL
22. KNOX BOX (COORD. W/ LOCAL MUNICIPALITIES & VERIFY R.O. PRIOR TO INSTALLATION & FRAMING)

LEGEND

- X — WINDOW DESIGNATION RE: SHT A-7.2
- X — INDICATES DOOR-RE: SHT A-7.2 FOR DOOR SCHEDULE
- X — PARTITION TYPE – RE: SHT A-1.2
- X — FLOOR PLAN NOTES THIS SHT
- XX — FINISH DESIGNATION – RE: SHT A-7.2

BKA Architects, Inc.
Architecture + Interiors

142 Crescent Street
Brockton, MA 02302

tel : 508.583.5603
fax : 508.584.2914
e-mail : bka@bkaarchs.com

CONSULTANT:

SEAL:

CVS/pharmacy

NEW

STORE NUMBER: 329

NORTHGATE PLAZA
91 AUBURN STREET
PORTLAND, MAINE

DEVELOPER:

A & D REALTY, LLC
5 MILITIA DRIVE
LEXINGTON, MA 02421

REVISIONS:

DRAWING BY:	RTK
DATE:	8/31/09
JOB NUMBER:	209017

TITLE:
FLOOR PLAN

SHEET NUMBER:
A-1.1

COMMENTS:
ISSUED FOR CONSTRUCTION

Copyright © 2009 by BKA Architects, Inc. The architectural plans, drawings, designs, specifications and other arrangements on this sheet are and shall remain the property of BKA Architects, Inc. No part thereof shall be copied, disclosed to others, or used in connection with any work or project, other than the specified project for which they have been prepared and delivered, without the express knowledge and written consent of BKA Architects, Inc.

P:\Retail_Proj\209017\CVS #329\Architectural\Sheets\209017_A11.dwg Sep 02, 2009 - 9:08 am RKUHN

IT IS IMPERATIVE THAT THE CONDITIONED AIR AT THE RETAIL LEVEL NOT MIX WITH THE UNCONDITIONED AIR IN THE ATTIC. G.C. SHALL MAKE SEVERAL VISUAL INSPECTIONS & SEAL ANY BREACHES, AND PROVIDE BATT INSULATION ALONG THE HORIZONTAL & VERTICAL PLANES OF THIS ENVELOPE (I.E.: IN THE ATTIC, AT THE V.R.C.)

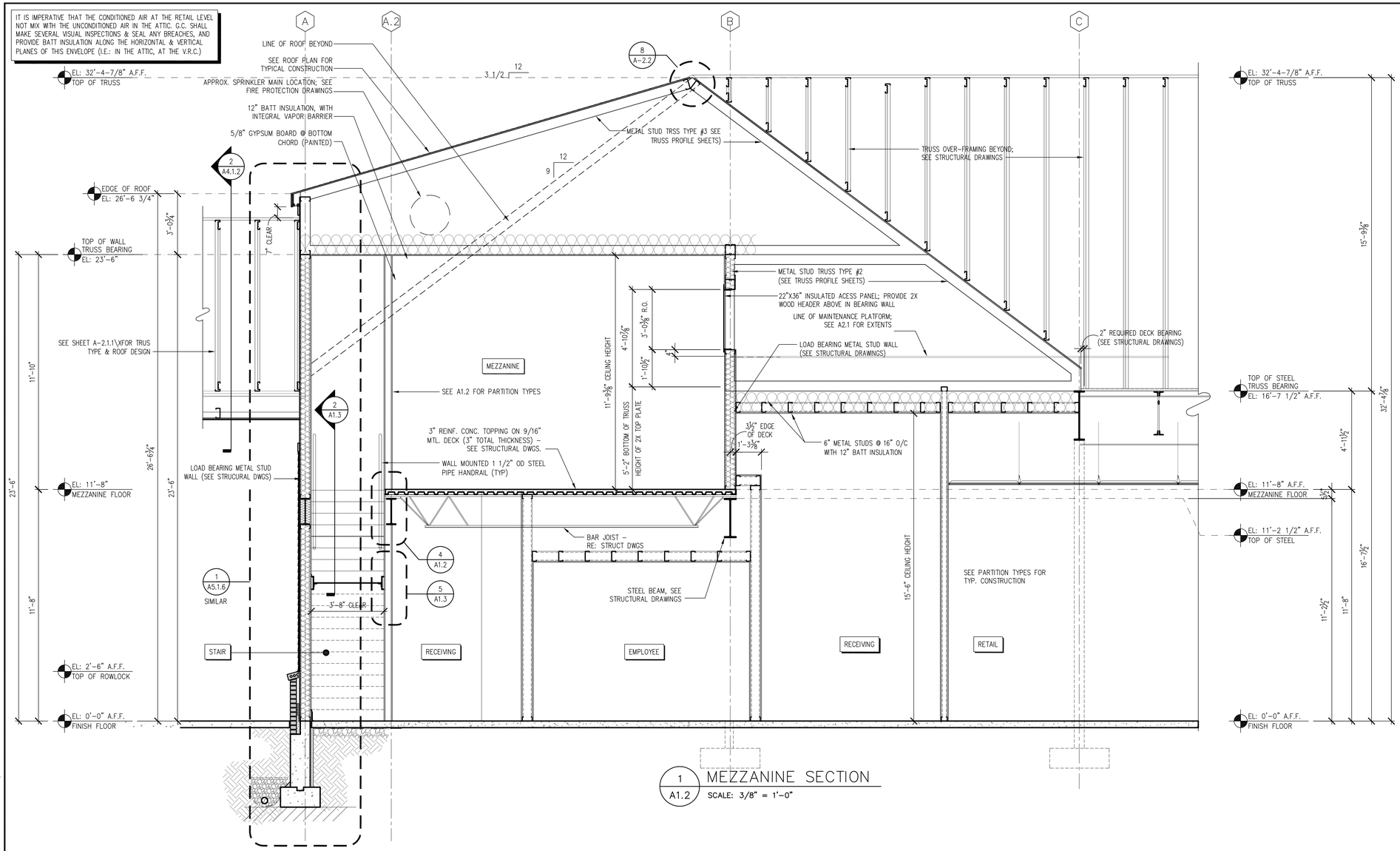

1 A1.2 MEZZANINE SECTION
SCALE: 3/8" = 1'-0"

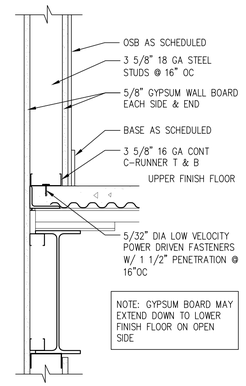

4 A-1.2 SECTION
SCALE: 1 1/2" = 1'-0"

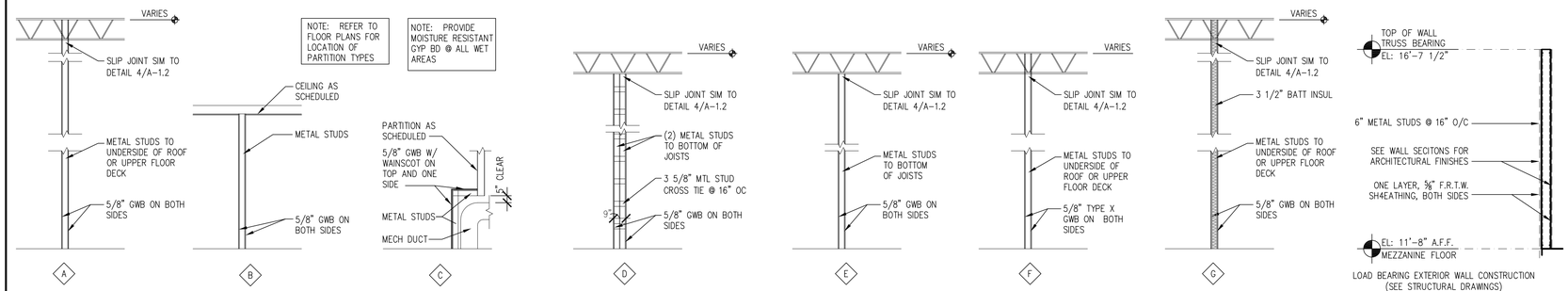

2 A1.2 PARTITION TYPES
NOT TO SCALE
NOTE: ALL PARTITION TYPES MAY NOT BE USED

STUD DESIGNATIONS	
STUD	DESCRIPTION
1	3 5/8" @ 16" OC
2	6" @ 16" OC
REFER TO STRUCT FOR STUD GA	

RATED WALL: WALL ASSEMBLY HAS A (1) HOUR RATING. UL ASSEMBLY U465-SEAL ALL PENETRATIONS
REFER 4/A-1.2 FOR SLIP JOINT DETAIL

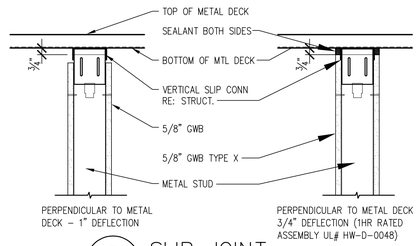

3 A-1.2 SLIP JOINT
SCALE: 1 1/2" = 1'-0"

P:\Retail_Proj\209017\CVS #329\Architectural\Sheets\209017_A12.DWG Sep 02 , 2009 - 9:08 am RKUHN

BKA Architects, Inc.
Architecture + Interiors
142 Crescent Street
Brockton, MA 02302
tel : 508.583.5603
fax : 508.584.2914
e-mail : bka@bkaarchs.com

CONSULTANT:

SEAL:

CVS/pharmacy

NEW

STORE NUMBER: 329

NORTHGATE PLAZA
91 AUBURN STREET
PORTLAND, MAINE

DEVELOPER:

A & D REALTY, LLC
5 MILITIA DRIVE
LEXINGTON, MA 02421

REVISIONS:

DRAWING BY:	RTK
DATE:	8/31/09
JOB NUMBER:	209017

TITLE:
MEZZANINE SECTION & DETAILS

SHEET NUMBER:
A-1.2

COMMENTS:
ISSUED FOR CONSTRUCTION

Copyright © 2006 by BKA Architects, Inc. The architectural plans, drawings, specifications and other components to this sheet are and shall remain the property of BKA Architects, Inc. They were prepared and developed, without the express knowledge or written consent of BKA Architects, Inc. in connection with the work of project, other than the specified project for which they have been prepared and developed.

IT IS IMPERATIVE THAT THE CONDITIONED AIR AT THE RETAIL LEVEL NOT MIX WITH THE UNCONDITIONED AIR IN THE ATTIC. G.C. SHALL MAKE SEVERAL VISUAL INSPECTIONS & SEAL ANY BREACHES, AND PROVIDE BATT INSULATION ALONG THE HORIZONTAL & VERTICAL PLANES OF THIS ENVELOPE (I.E.: IN THE ATTIC, AT THE V.R.C.)

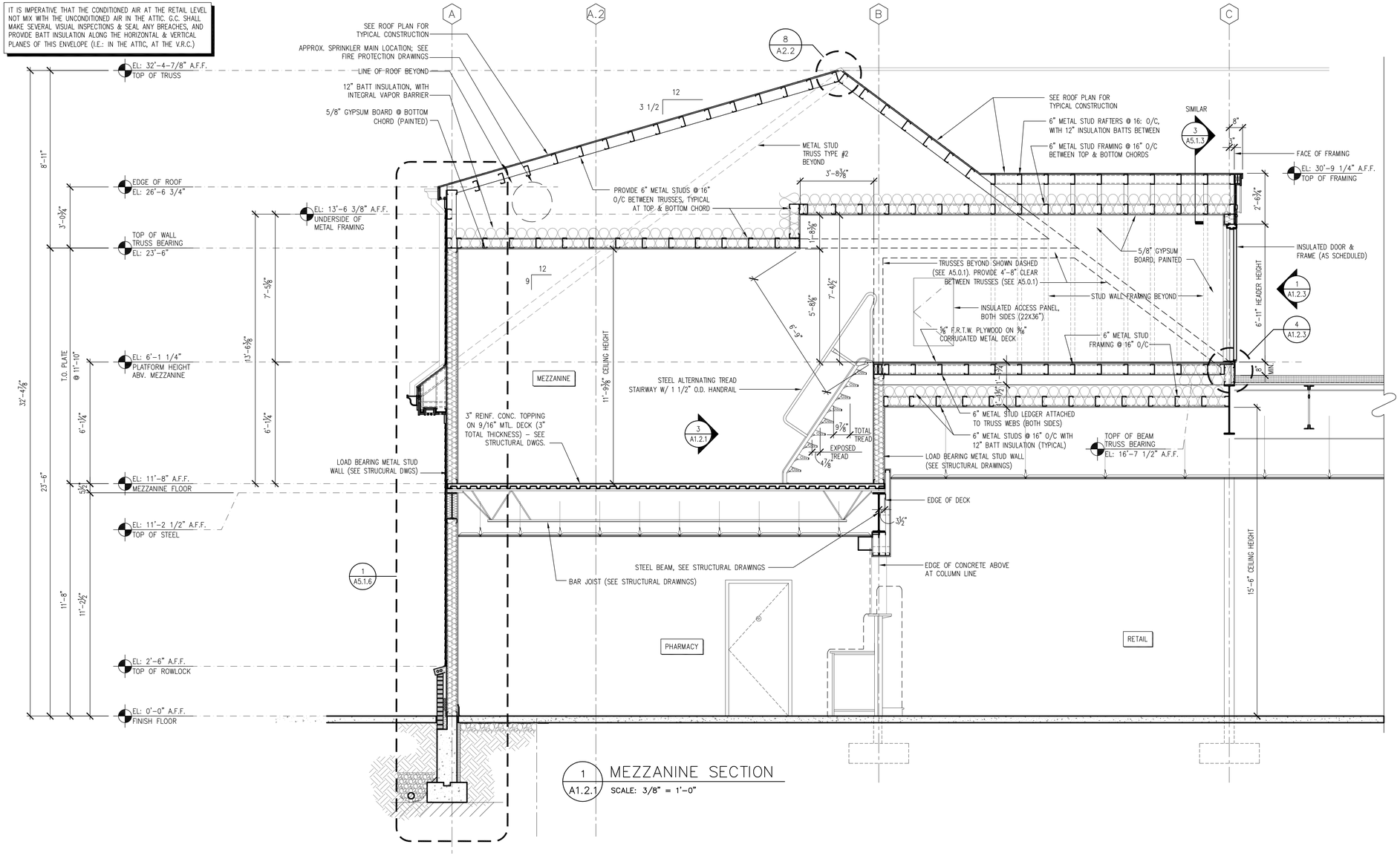

1 A1.2.1 MEZZANINE SECTION

SCALE: 3/8" = 1'-0"

P:\Retail_Proj\209017\CVS #329\Architectural\Sheets\209017_A12.DWG Sep 02, 2009 - 9:08 am RKUHN

BKA Architects, Inc.
Architecture + Interiors

142 Crescent Street
Brockton, MA 02302

tel : 508.583.5603
fax : 508.584.2914
e-mail : bka@bkaarchs.com

CONSULTANT:

SEAL:

CVS/pharmacy

NEW

STORE NUMBER: 329

NORTHGATE PLAZA
91 AUBURN STREET
PORTLAND, MAINE

DEVELOPER:

A & D REALTY, LLC
5 MILITIA DRIVE
LEXINGTON, MA 02421

REVISIONS:

DRAWING BY:	RTK
DATE:	8/31/09
JOB NUMBER:	209017

TITLE: MEZZANINE SECTION & DETAILS

SHEET NUMBER: A-1.2.1

COMMENTS: ISSUED FOR CONSTRUCTION

Copyright ©2009 by BKA Architects, Inc. The architectural plans, drawings, designs, specifications and other components in this sheet are and shall remain the property of BKA Architects, Inc. They are not to be used, disclosed to others, or used in connection with any work or project other than the specified project for which they have been prepared and developed, without the express knowledge and written consent of BKA Architects, Inc.

IT IS IMPERATIVE THAT THE CONDITIONED AIR AT THE RETAIL LEVEL NOT MIX WITH THE UNCONDITIONED AIR IN THE ATTIC. G.C. SHALL MAKE SEVERAL VISUAL INSPECTIONS & SEAL ANY BREACHES, AND PROVIDE BATT INSULATION ALONG THE HORIZONTAL & VERTICAL PLANES OF THIS ENVELOPE (I.E.: IN THE ATTIC, AT THE V.R.C.)

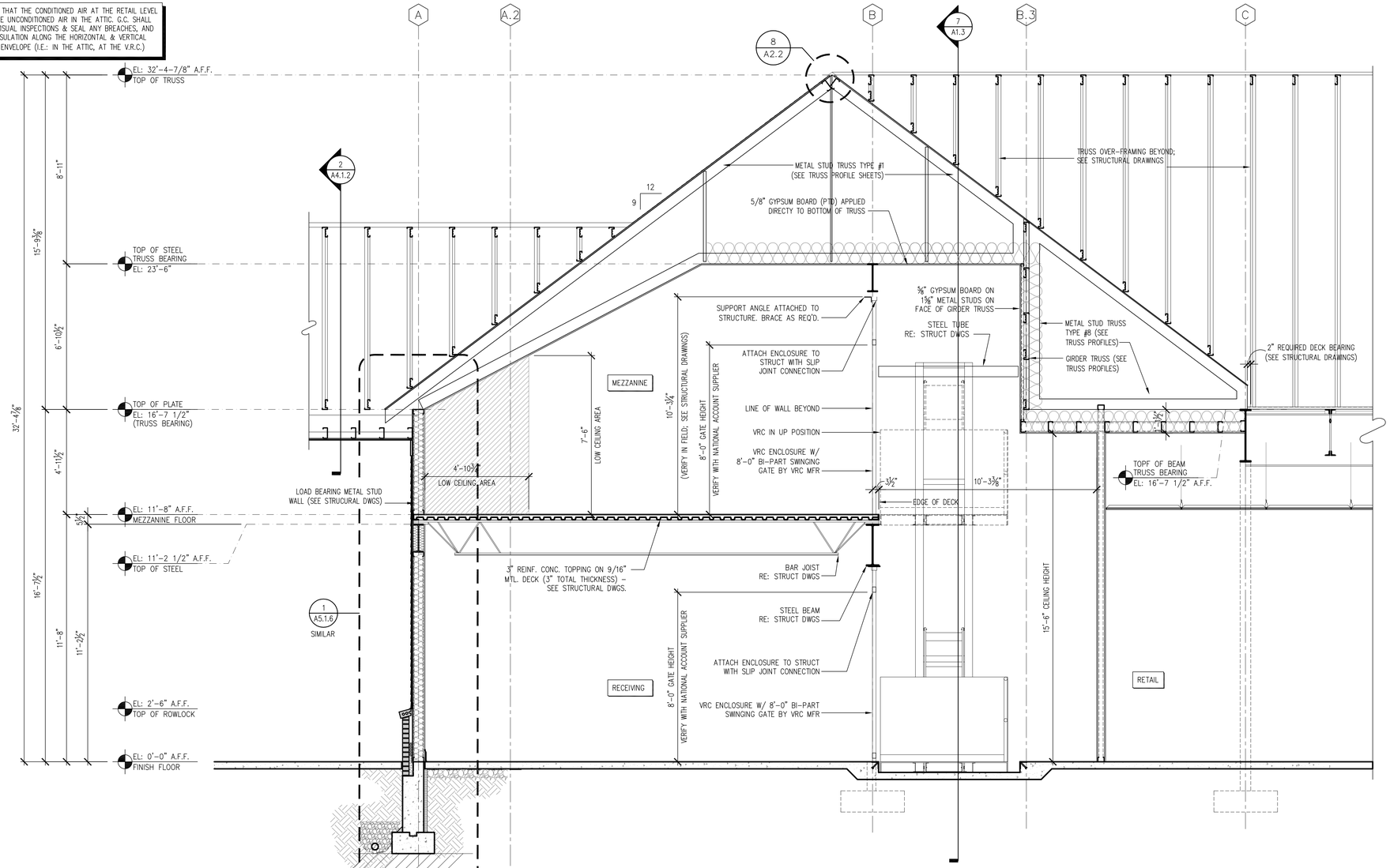

1 MEZZANINE SECTION @ V.R.C.
A-1.2.2 SCALE: 3/8" = 1'-0"

P:\Retail_Proj\209017\CVS #329\Architectural\Sheets\209017_A12.DWG Sep 02 , 2009 - 9:09 am RKUHN

BKA Architects, Inc.
Architecture + Interiors

142 Crescent Street
Brockton, MA 02302

tel : 508.583.5603
fax : 508.584.2914
e-mail : bka@bkaarchs.com

CONSULTANT:

SEAL:

CVS/pharmacy

NEW

STORE NUMBER: 329

NORTHGATE PLAZA
91 AUBURN STREET
PORTLAND, MAINE

DEVELOPER:

A & D REALTY, LLC
5 MILITIA DRIVE
LEXINGTON, MA 02421

REVISIONS:

DRAWING BY: RTK

DATE: 8/31/09

JOB NUMBER: 209017

TITLE:
MEZZANINE SECTION
& DETAILS

SHEET NUMBER:
A-1.2.2

COMMENTS:
ISSUED FOR CONSTRUCTION

Copyright © 2006 by BKA Architects, Inc. The architectural plans, drawings, specifications and other components in this sheet are and shall remain the property of BKA Architects, Inc. and are protected by copyright. Reproduction, distribution or use in connection with any work or project other than the specified project for which they have been prepared and developed, without the express knowledge and written consent of BKA Architects, Inc.

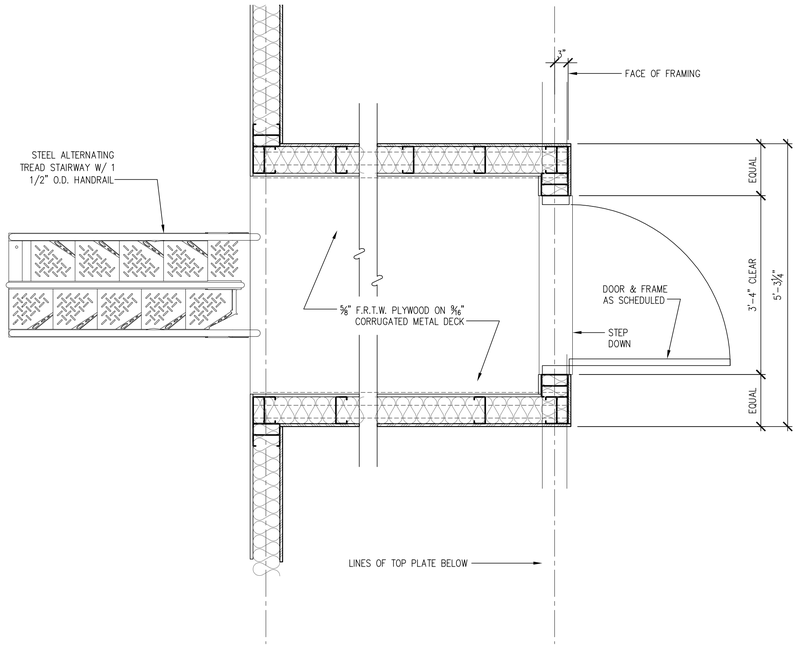

2 A1.2.3 ENLARGED PLAN DETIAL
SCALE: 3/4" = 1'-0"

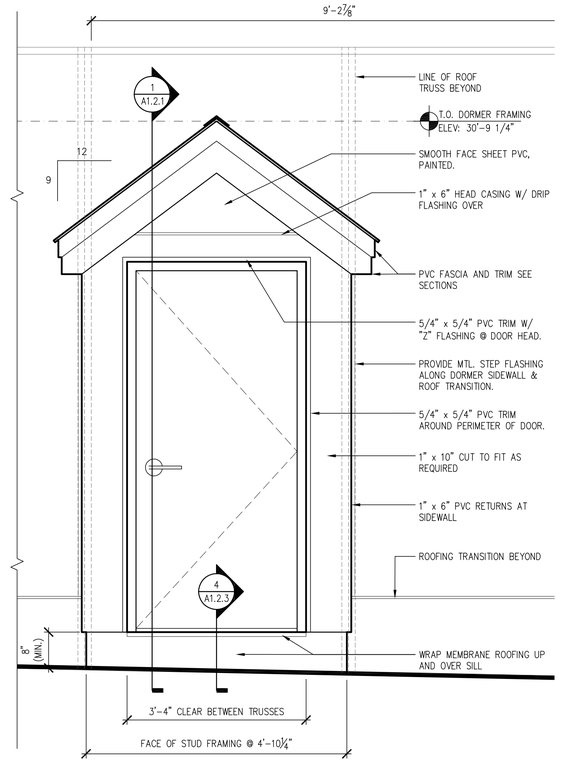

1 A-1.2.3 ROOF ACCESS DORMER ELEVATION
SCALE: 3/4" = 1'-0"

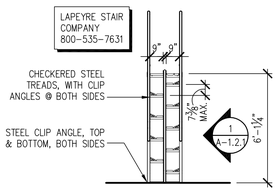

3 A1.2.3 ALTERNATING TREAD STAIR DETAIL
SCALE: 1/4" = 1'-0"

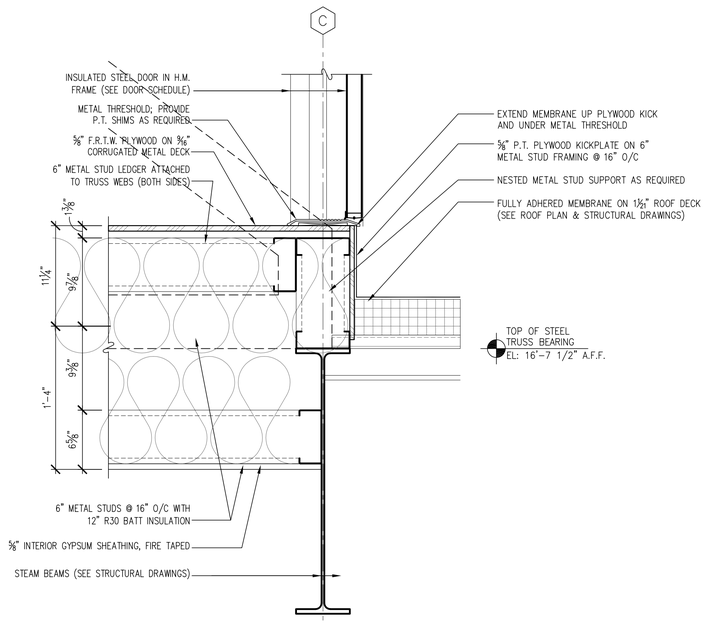

4 A1.2.3 ROOF ACCESS SILL DETAIL
SCALE:1 1/2" = 1'-0"

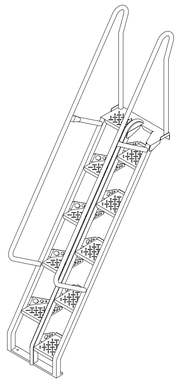

3A A1.2.3 ALTERNATING TREAD STAIR DETAIL (ISOMETRIC)
SCALE: N.T.S.

BKA Architects, Inc.
Architecture + Interiors
142 Crescent Street
Brockton, MA 02302
tel : 508.583.5603
fax : 508.584.2914
e-mail : bka@bkaarchs.com

CONSULTANT:

SEAL:

CVS/pharmacy

NEW

STORE NUMBER: 329

NORTHGATE PLAZA
91 AUBURN STREET
PORTLAND, MAINE

DEVELOPER:

A & D REALTY, LLC
5 MILITIA DRIVE
LEXINGTON, MA 02421

REVISIONS:

DRAWING BY:	RTK
DATE:	8/31/09
JOB NUMBER:	209017

TITLE:
ROOF ACCESS
DORMER DETAILS

SHEET NUMBER:
A1.2.3

COMMENTS:
ISSUED FOR CONSTRUCTION

Copyright ©2006 by BKA Architects, Inc. The architectural plans, drawings, specifications and other components in this sheet are and shall remain the property of BKA Architects, Inc. To such trades shall be used, disclosed to others, or used in connection with any work or project other than the specified project for which they have been prepared and developed, without the express knowledge and written consent of BKA Architects, Inc.

P:\Retail_Proj\209017\CVS #329\Architectural\Sheets\209017_A12.DWG Sep 02 , 2009 - 9:09 am RKUHN

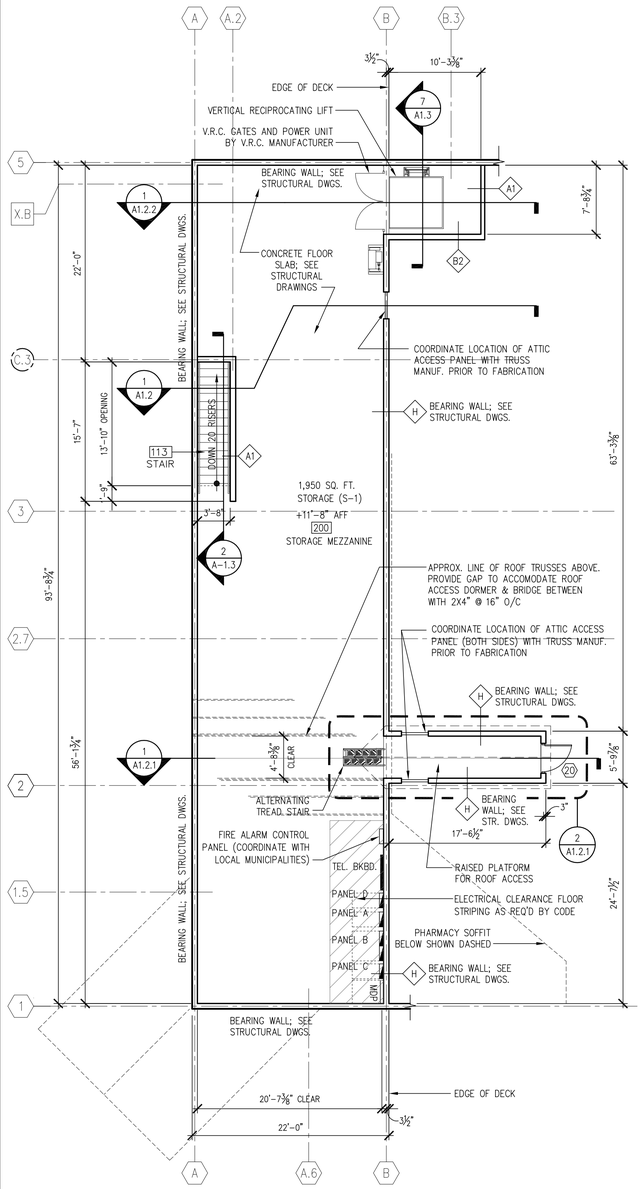

1 A-1.3 MEZZANINE FLOOR PLAN
SCALE: 1/8" = 1'-0"

NOTES BY SYMBOL

X — PARTITION TYPE – RE: SHT A-1.2

NOTE: PROVIDE L3x3x1/8 CORNER GUARD TO 48" AFF ON ALL EXPOSED OUTSIDE CORNERS.

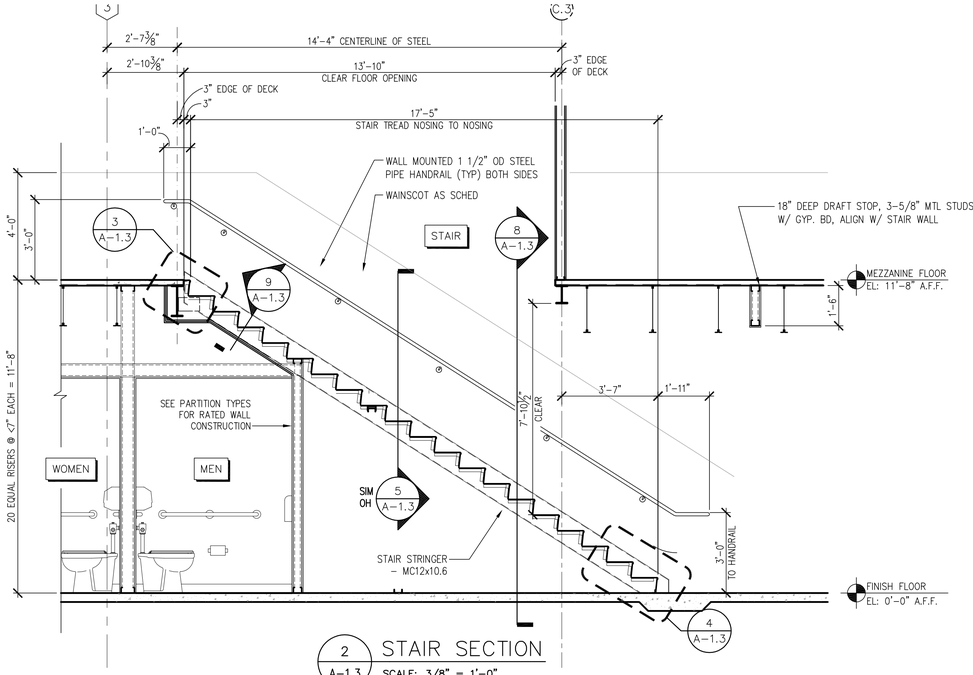

2 A-1.3 STAIR SECTION
SCALE: 3/8" = 1'-0"

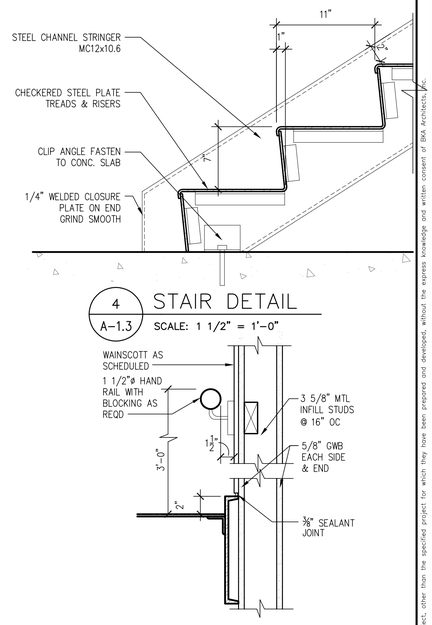

4 A-1.3 STAIR DETAIL
SCALE: 1 1/2" = 1'-0"

5 A-1.3 SECTION AT STAIR WAL
SCALE: 1 1/2" = 1'-0"

8 A-1.3 NOT USED
--

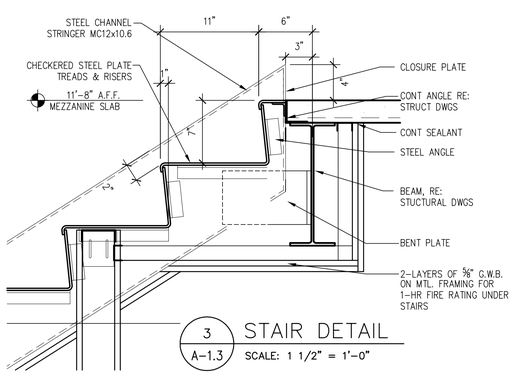

3 A-1.3 STAIR DETAIL
SCALE: 1 1/2" = 1'-0"

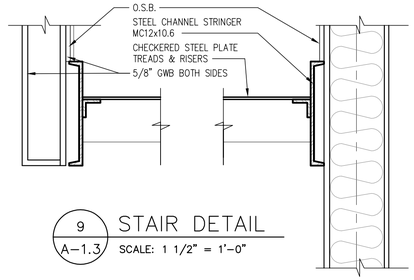

9 A-1.3 STAIR DETAIL
SCALE: 1 1/2" = 1'-0"

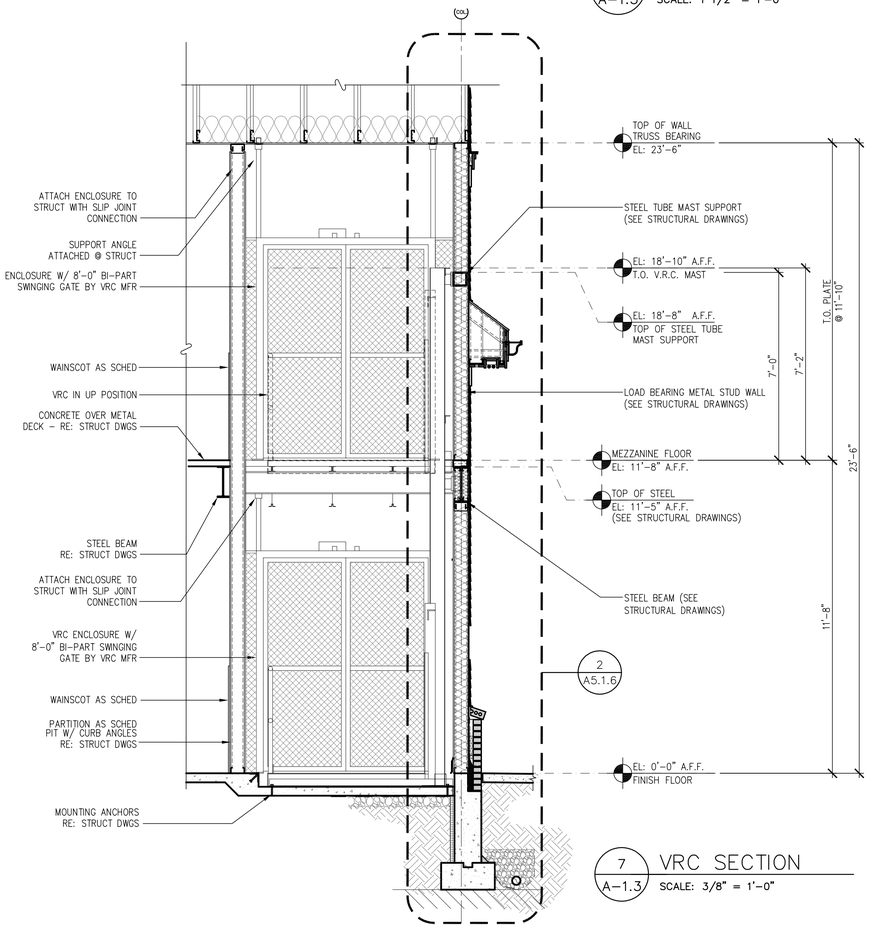

7 A-1.3 VRC SECTION
SCALE: 3/8" = 1'-0"

BKA Architects, Inc.
Architecture + Interiors
142 Crescent Street
Brockton, MA 02302
tel : 508.583.5603
fax : 508.584.2914
e-mail : bka@bkaarchs.com

CONSULTANT:

SEAL:

CVS/pharmacy

NEW

STORE NUMBER: 329

NORTHGATE PLAZA
91 AUBURN STREET
PORTLAND, MAINE

DEVELOPER:

A & D REALTY, LLC
5 MILITIA DRIVE
LEXINGTON, MA 02421

REVISIONS:

DRAWING BY:	RTK
DATE:	8/31/09
JOB NUMBER:	209017

TITLE: UPPER FLOOR PLAN, SECTIONS, & DETAILS

SHEET NUMBER: A-1.3

COMMENTS: ISSUED FOR CONSTRUCTION

Copyright © 2009 by BKA Architects, Inc. The architectural plans, drawings, sketches, specifications and other arrangements on this sheet are and shall remain the property of BKA Architects, Inc. No part thereof shall be copied, disclosed to others, or used in connection with any other project, other than the specified project for which they have been prepared and delivered, without the express knowledge and written consent of BKA Architects, Inc.

P:\Retail_Proj\209017\CVS #329\Architectural\Sheets\209017_A13.DWG Sep 02 , 2009 - 9:10 am RKUHN

GENERAL NOTES

CJ = CONTROL JOINT

EJ = EXPANSION JOINT

PROVIDE 1/2" PMJ AT PERIMETER OF BUILDING AND COLUMNS AT ALL CONCRETE SIDEWALK AREAS

ALL CONCRETE SIDEWALKS AND PADS SHALL BE REINFORCED 4,000 PSI CONCRETE

PROVIDE BROOMED FINISH PERPENDICULAR TO DIRECTION OF TRAVEL

REFER TO CIVIL DRAWINGS FOR PARKING STALL LAYOUT

REFER TO CIVIL DRAWINGS FOR LANDSCAPE PLANTINGS AND TREATMENTS

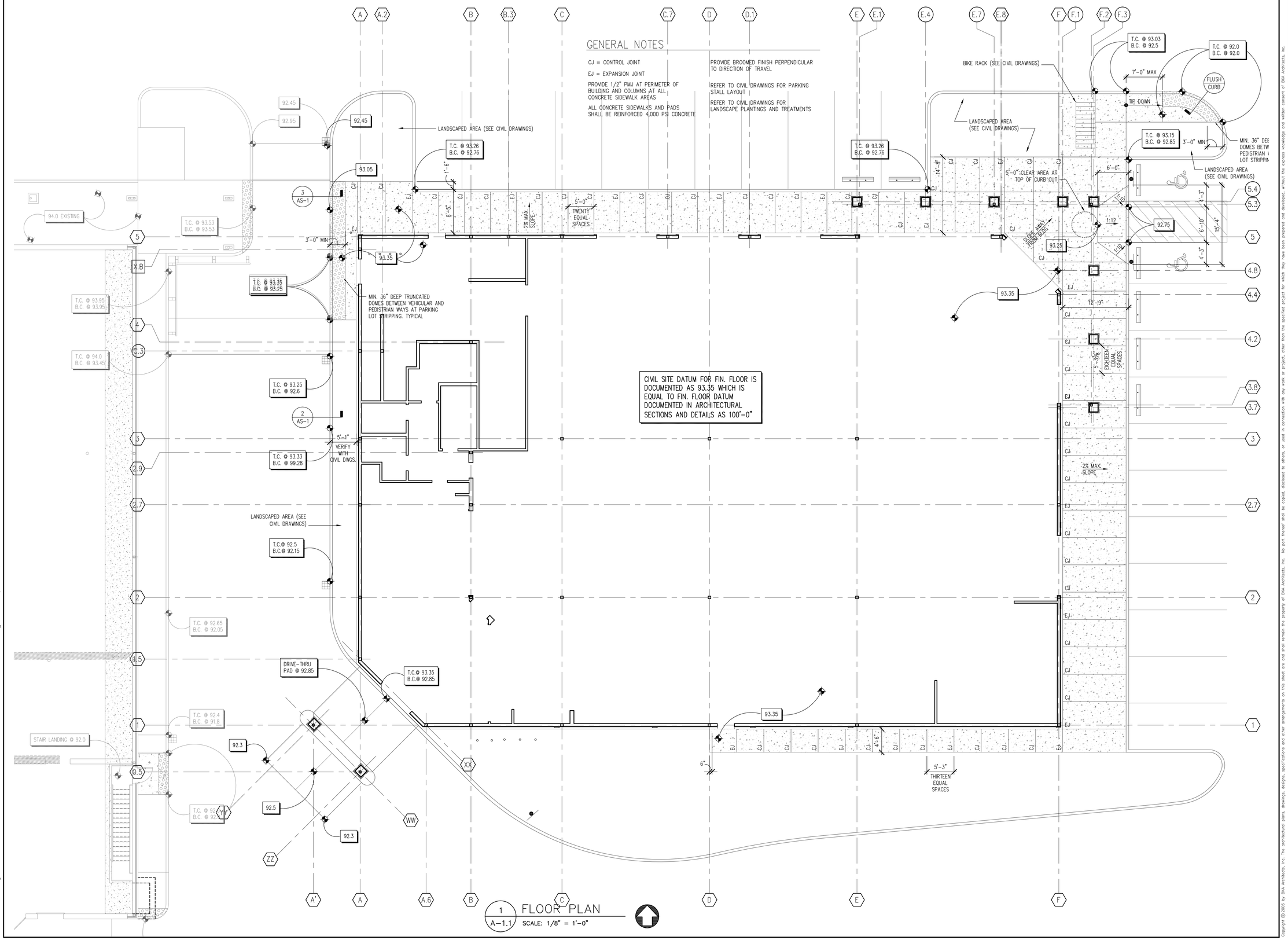

1 A-1.1 FLOOR PLAN
SCALE: 1/8" = 1'-0"

P:\Retail_Proj\209017\CVS #329\Architectural\Sheets\209017_A14.dwg Sep 02 , 2009 - 9:11 am RKUHN

BKA Architects, Inc.
Architecture + Interiors

142 Crescent Street
Brockton, MA 02302

tel : 508.583.5603
fax : 508.584.2914
e-mail : bka@bkaarchs.com

CONSULTANT:

SEAL:

CVS/ pharmacy

NEW

STORE NUMBER: 329

NORTHGATE PLAZA
91 AUBURN STREET
PORTLAND, MAINE

DEVELOPER:

A & D REALTY, LLC
5 MILITIA DRIVE
LEXINGTON, MA 02421

REVISIONS:

DRAWING BY: RTK

DATE: 8/31/09

JOB NUMBER: 209017

TITLE:

SIDEWALK PLAN

SHEET NUMBER:

A-1.4

COMMENTS:
ISSUED FOR CONSTRUCTION

Copyright © 2009 by BKA Architects, Inc. The architectural plans, drawings, sketches, specifications and other arrangements on this sheet are and shall remain the property of BKA Architects, Inc. No part thereof shall be copied, disclosed to others, or used in connection with any work or project, other than the specified project for which they have been prepared and delivered, without the express knowledge and written consent of BKA Architects, Inc.

NOTES BY SYMBOL:

1. SANITARY VENT – RE: PLUMBING DWGS & DETAIL 4/A-2.2
2. SEALANT POCKET FOR MUZAK SYSTEM RE: DETAIL 14/A-2.2
3. EXHAUST FAN FROM RESTROOM(S) – RE: MECH DWGS
4. TAPERED INSULATION SLOPE ¼" PER 1'-0"
5. COORDINATE ROOFTOP LOCATIONS WITH MECH AND PLUMBING. RE: DETAIL 2/A-2.2 FOR ROOF CURB.
6. SEALANT POCKET FOR INFORMATION BACKUP SYSTEM RE: DETAIL 14/A-2.2
7. COOLER CONDENSING UNIT MOUNTED ON 34"x64" MULTI-PURPOSE EQUIPMENT SUPPORT. RETURN REFRIGERANT AND ELEC LINES THRU CURB INTO CEILING PLENUM. RE: 2/A-2.2 FOR SUPPORT DETAIL.
8. NOT USED
9. ROOF WALKWAY PAD 30" MIN WIDTH – RE: 6/A-2.2
10. NOT USED
11. ROOF DRAIN RE: DETAIL 9/A-2.2
12. NOT USED
13. 8" TALL X 16" WIDE OVERFLOW SCUPPER RE: DETAIL 3/A5.1.41
14. COL. BALLOON TIE DOWN RE: STRUCT DWGS AND 10/-A2.2 FOR FLASHING.
15. WALL BALLOON TIE DOWN RE: STRUCT DWGS AND 11/A-2.2 FOR FLASHING.
16. NOT USED
17. NOT USED
18. NOT USED
19. VENT FOR UNIT HEATER RE: MECH
20. 4x6" RAIN LEADER TIED TO DRAINAGE SYSTEM; SEE A-1.1 & A-4.1 FOR LOCATIONS & 2/AS-1

GENERAL ROOF NOTES

1. RE: MECH/PLUMBING DWGS FOR ADDITIONAL NOTES AND DETAILS.
2. VERIFY LOCATIONS OF ALL ROOF PENETRATIONS WITH STRUCT, MECH AND PLUMBING DWGS
3. ALL EQUIPMENT ON ROOF TO BE MOUNTED ON CURBS AND FASTENED PER MFR RECOMMENDATIONS, RE: DETAIL, THIS SHT
4. ALL VENT LOCATIONS SHOULD BE VERIFIED WITH MECH AND PLUMBING DWGS
5. EXHAUST FANS AND VENTS TO BE LOCATED A MINIMUM OF 10'-0" FROM A/C INTAKE. VERIFY ALL LOCATIONS WITH MECH AND PLUMBING DWGS
6. MECH SUB-CONTRACTOR TO COORDINATE INSTALLATION AND ACCEPTANCE OF PRE-FABRICATED CURBS AND PENETRATIONS WITH ROOF MEMBRANE SUB-CONTRACTOR. GC TO PROVIDE ALL NECESSARY BLOCKING, NAILERS, ETC. AS NECESSARY FOR A WATERTIGHT AND WATERPROOF ROOF.
7. IT IS THE GENERAL CONTRACTOR'S RESPONSIBILITY TO VERIFY, COORDINATE AND /OR INSTALL ALL ADJACENT AND/OR RELATED FLASHINGS, BLOCKINGS, NAILERS, INSULATION STOPS, CRICKETS, ETC. NECESSARY FOR THE COMPLETE INSTALLATION OF THE ROOF MEMBRANE WHICH ARE REQUIRED FOR A COMPLETE, WARRANTED, WATERTIGHT, WATERPROOF INSTALLATION.
8. ALL ROOF SLOPES ARE TO HAVE A MINIMUM 1/8" PER FT FALL WHERE CRICKET VALLEYS OCCUR. CRICKETS ARE TO BE PROVIDED WITH SUFFICIENT DEPTH AND SLOPE TO ACCOMMODATE A MINIMUM 1/8" PER FOOT FALL AT THE VALLEY.
9. ALL ROOF SLOPES HAVE A 1/4" PER FOOT FALL, UNLESS NOTED OTHERWISE.
10. CIVIL ENGINEER TO COORDINATE STORM SEWER CONNECTION WITH SITE PLANS.

ROOF PLAN LEGEND

- COPING
- ROOF HATCH
- RTU # — ROOF TOP UNIT RE: CURB DETAIL, THIS SHT RE: MECH DWGS FOR DETAILS ON UNITS.
- 1/4" — SLOPE TAPERED INSULATION AT 1/4" PER FOOT
- SLOPE — SLOPE ROOF PER ROOF STRUCTURE
- ¾" X 30" PLYWOOD MAINTENANCE PLATFORM LOCATED IN ATTIC (SEE ROOF PLAN FOR EXTENTS)

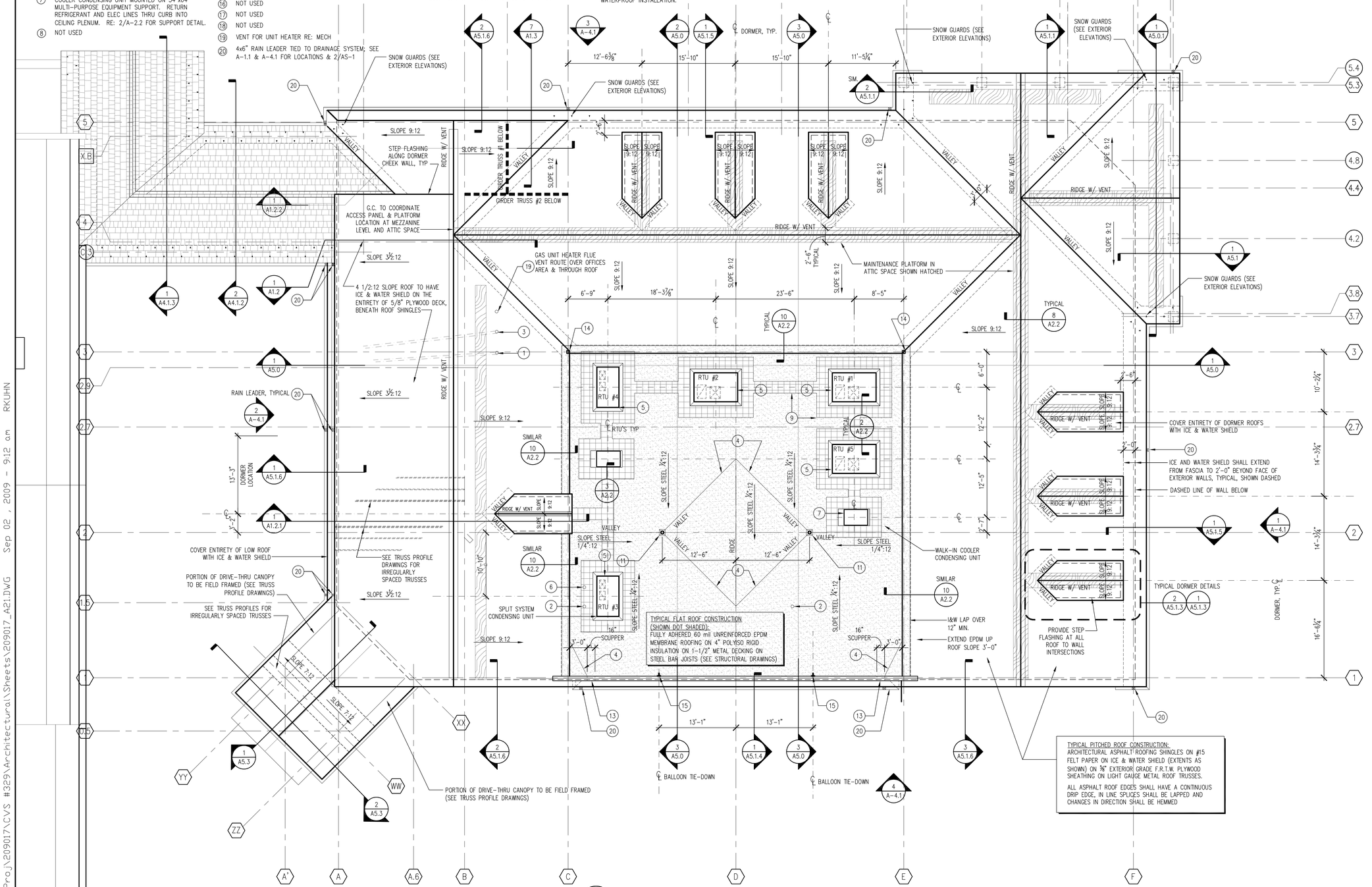

1 / A2.1 ROOF PLAN
SCALE: 1/8" = 1'-0"

P:\Retail_Proj\209017\CVS #329\Architectural\Sheets\209017_A21.DWG Sep 02 , 2009 - 9:12 am RKUHN

BKA Architects, Inc.
Architecture + Interiors
142 Crescent Street
Brockton, MA 02302
tel : 508.583.5603
fax : 508.584.2914
e-mail : bka@bkaarchs.com

CONSULTANT:

SEAL:

CVS/pharmacy

NEW

STORE NUMBER: 329
NORTHGATE PLAZA
91 AUBURN STREET
PORTLAND, MAINE

DEVELOPER:
A & D REALTY, LLC
5 MILITIA DRIVE
LEXINGTON, MA 02421

REVISIONS:

DRAWING BY:	RTK
DATE:	8/31/09
JOB NUMBER:	209017

TITLE: ROOF PLAN

SHEET NUMBER: A2.1

COMMENTS:
ISSUED FOR CONSTRUCTION

Copyright © 2009 by BKA Architects, Inc. The architecture or plans, drawings, specifications and other instruments or service, is the property of BKA Architects, Inc. No part thereof shall be copied, disclosed to others, or used in connection with any work or project, other than the specified project for which they have been prepared and delivered, without the express knowledge and written consent of BKA Architects, Inc.

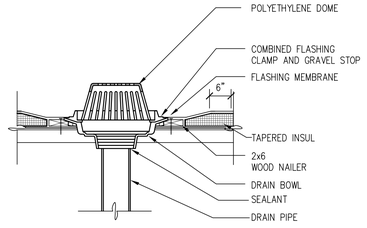

9 / A2.2 TYP ROOF DRAIN DETAIL
SCALE: 3/4" = 1'-0"

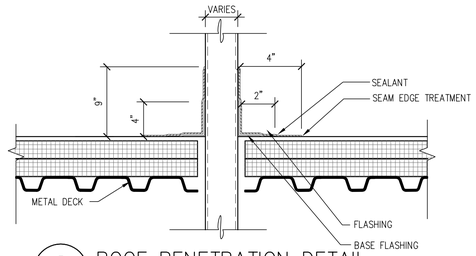

5 / A2.2 ROOF PENETRATION DETAIL
SCALE: 1 1/2" = 1'-0"

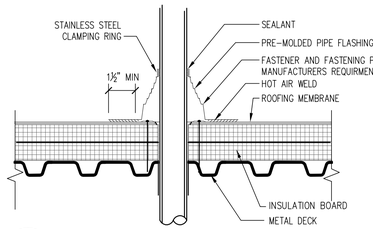

1 / A-2.2 PIPE PENETRATION DETAIL
SCALE: 1 1/2" = 1'-0"

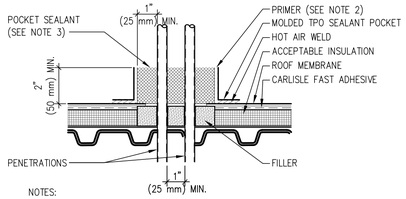

NOTES:

1. TEMPERATURE OF PIPE MUST NOT EXCEED 120° F (49° C).
2. PRIMER MUST BE APPLIED TO ALL INSIDE SURFACES AND PENETRATIONS PRIOR TO FILLING WITH SEALANT.
3. FILL POCKET COMPLETELY WITH TPO MOLDED POCKET SEALANT UNTIL RIM IS COVERED WITH SEALANT; ENSURE ALL VOIDS ARE FILLED.
4. SEALANT POCKET TO BE MINIMUM 1" (25 mm) FROM PENETRATION ON ANY SIDE.

12 / A2.2 SEALANT POCKET
SCALE: 3" = 1'-0"

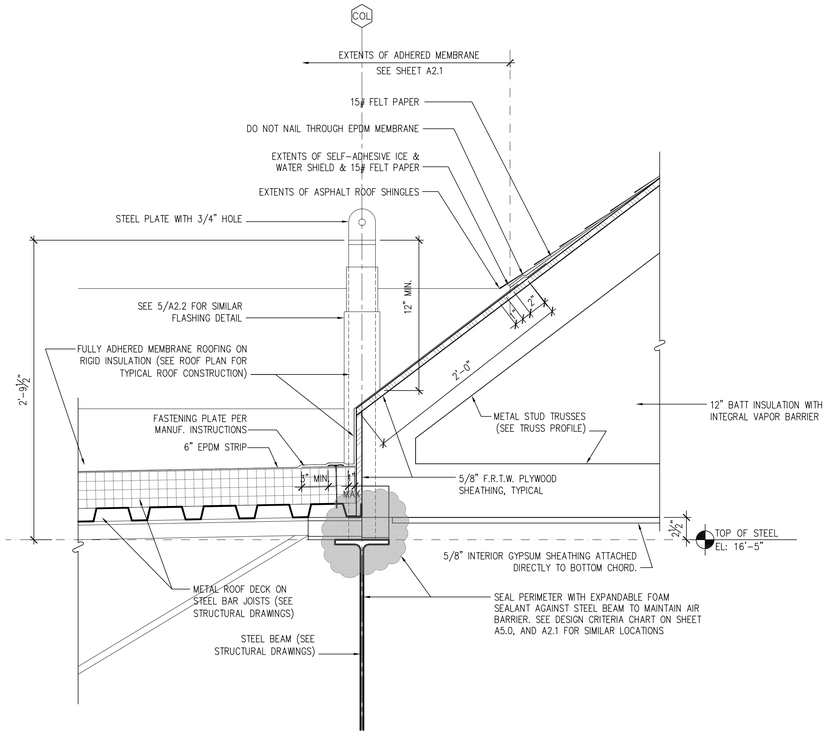

10 / A2.2 BALLOON TIE DOWN / ROOF TRANSITION DETAIL
SCALE: 1 1/2" = 1'-0"

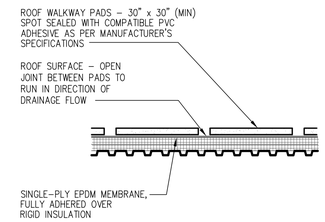

6 / A2.2 WALKWAY PAD DETAIL
SCALE: 1/2" = 1'-0"

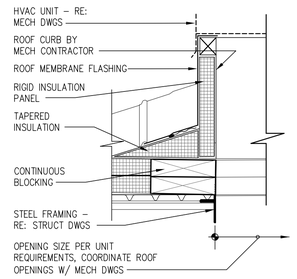

2 / A2.2 TYP ROOF CURB
SCALE: 1 1/2" = 1'-0"

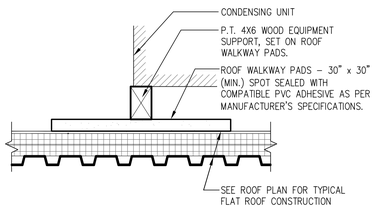

3 / A-2.2 SPLIT SYSTEM CONDENSING UNIT SUPPORT DETAIL
SCALE: 1"=1'-0"

13 / A2.2 NOT USED

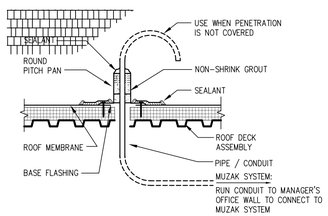

14 / A-2.2 PITCH POCKET DETAIL
SCALE: N.T.S.

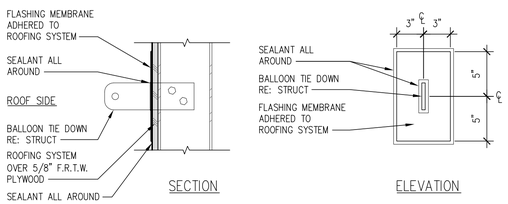

11 / A2.2 BALLOON TIE DOWN
SCALE: 1 1/2" = 1'-0"

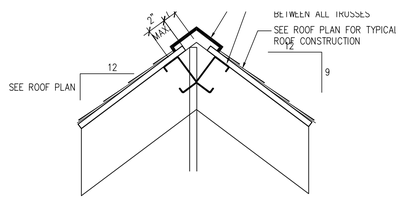

8 / A-2.2 RIDGE VENT DETAIL
SCALE: 1 1/2"=1'-0"

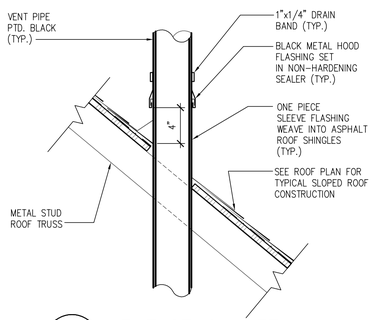

4 / A-2.2 VENT STACK DETAIL
SCALE: 1 1/2"=1'-0"

BKA Architects, Inc.
Architecture + Interiors
142 Crescent Street
Brockton, MA 02302
tel : 508.583.5603
fax : 508.584.2914
e-mail : bka@bkaarchs.com

CONSULTANT:

SEAL:

CVS/pharmacy

NEW

STORE NUMBER: 329

NORTHGATE PLAZA
91 AUBURN STREET
PORTLAND, MAINE

DEVELOPER:

A & D REALTY, LLC
5 MILITIA DRIVE
LEXINGTON, MA 02421

REVISIONS:

DRAWING BY:	RTK
DATE:	8/31/09
JOB NUMBER:	209017

TITLE: ROOF DETAILS

SHEET NUMBER: A2.2

COMMENTS:
ISSUED FOR CONSTRUCTION

Copyright © 2009 by BKA Architects, Inc. The architectural plans, drawings, designs, specifications and other arrangements on this sheet are and shall remain the property of BKA Architects, Inc. No part thereof shall be copied, disclosed to others, or used in connection with any work or project, other than the specified project for which they have been prepared and delivered, without the express knowledge and written consent of BKA Architects, Inc.

P:\Retail_Proj\209017\CVS #329\Architectural\Sheets\209017_A22.DWG Sep 02 , 2009 - 9:12 am RKUHN

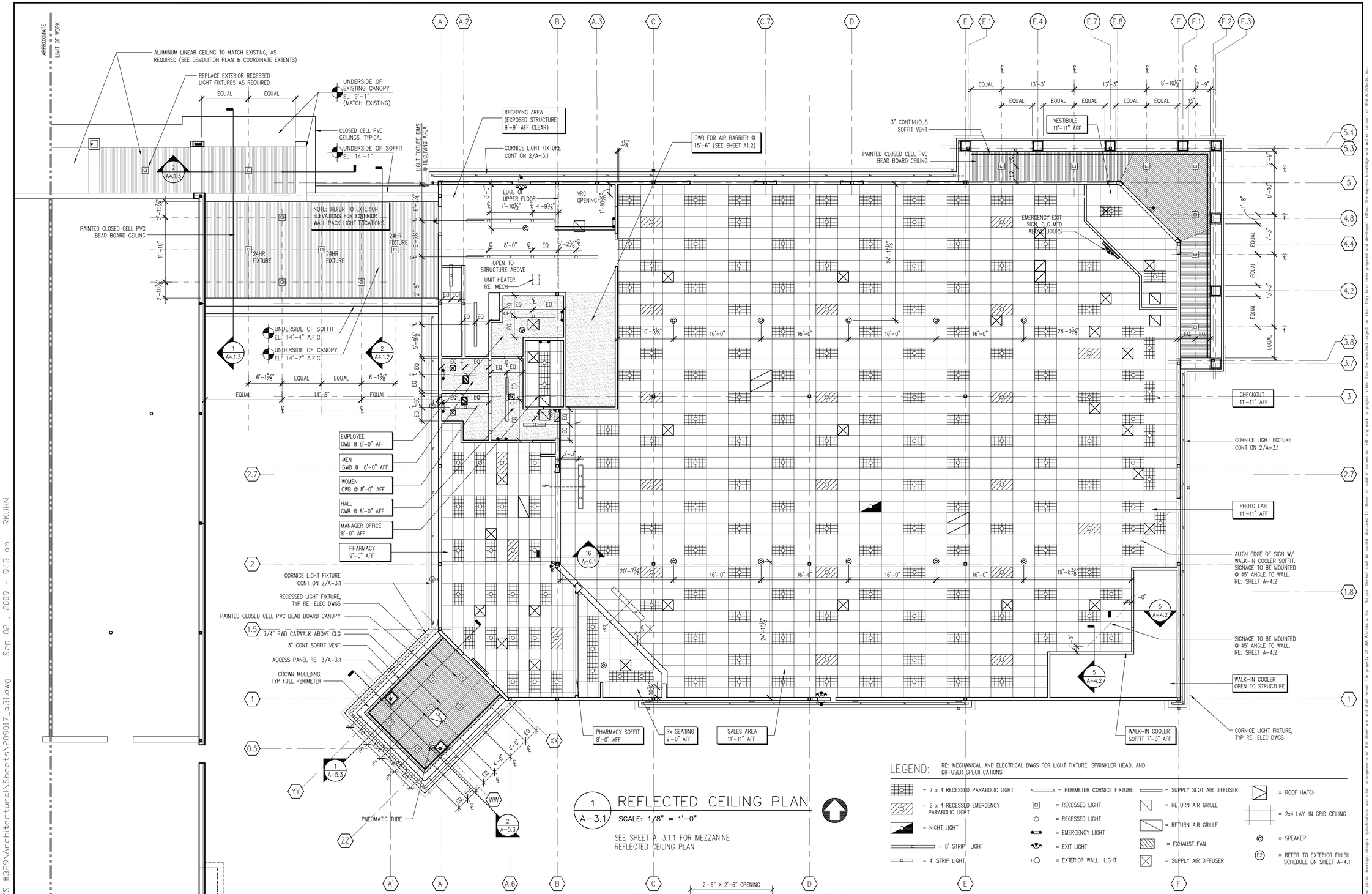

1 A-3.1 REFLECTED CEILING PLAN
SCALE: 1/8" = 1'-0"

SEE SHEET A-3.1.1 FOR MEZZANINE REFLECTED CEILING PLAN

LEGEND: RE: MECHANICAL AND ELECTRICAL DWGS FOR LIGHT FIXTURE, SPRINKLER HEAD, AND DIFFUSER SPECIFICATIONS

- = 2 x 4 RECESSED PARABOLIC LIGHT
- = 2 x 4 RECESSED EMERGENCY PARABOLIC LIGHT
- = NIGHT LIGHT
- = 8' STRIP LIGHT
- = 4' STRIP LIGHT
- = PERIMETER CORNICE FIXTURE
- = RECESSED LIGHT
- = RECESSED LIGHT
- = EMERGENCY LIGHT
- = EXIT LIGHT
- = EXTERIOR WALL LIGHT
- = SUPPLY SLOT AIR DIFFUSER
- = RETURN AIR GRILLE
- = RETURN AIR GRILLE
- = EXHAUST FAN
- = SUPPLY AIR DIFFUSER
- = ROOF HATCH
- = 2x4 LAY-IN GRID CEILING
- = SPEAKER
- E2 = REFER TO EXTERIOR FINISH SCHEDULE ON SHEET A-4.1

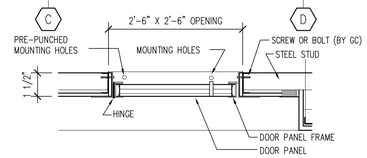

3 A-3.1 SECTION THRU ACCESS PANEL
SCALE: 3/4" = 1'-0"

BKA Architects, Inc.
Architecture + Interiors
142 Crescent Street
Brockton, MA 02302
tel: 508.583.5603
fax: 508.584.2914
e-mail: bka@bkaarchs.com

CONSULTANT:

SEAL:

CVS/pharmacy

NEW

STORE NUMBER: 329

NORTHGATE PLAZA
91 AUBURN STREET
PORTLAND, MAINE

DEVELOPER:

A & D REALTY, LLC
5 MILITIA DRIVE
LEXINGTON, MA 02421

REVISIONS:

DRAWING BY:	RTK
DATE:	8/31/09
JOB NUMBER:	209017

TITLE: REFLECTED CEILING PLANS & DETAILS

SHEET NUMBER: A-3.1

COMMENTS: ISSUED FOR CONSTRUCTION

Copyright © 2009 by BKA Architects, Inc. The architectural plans, drawings, designs, specifications and other arrangements in this sheet are and shall remain the property of BKA Architects, Inc. No part thereof shall be copied, disclosed to others, or used in connection with any work or project, other than the specified project for which they have been prepared and developed, without the express knowledge and written consent of BKA Architects, Inc.

P:\Retail_Proj\209017\CVS #329\Architectural\Sheets\209017_a31.dwg Sep 02, 2009 - 9:13 am RKUHN

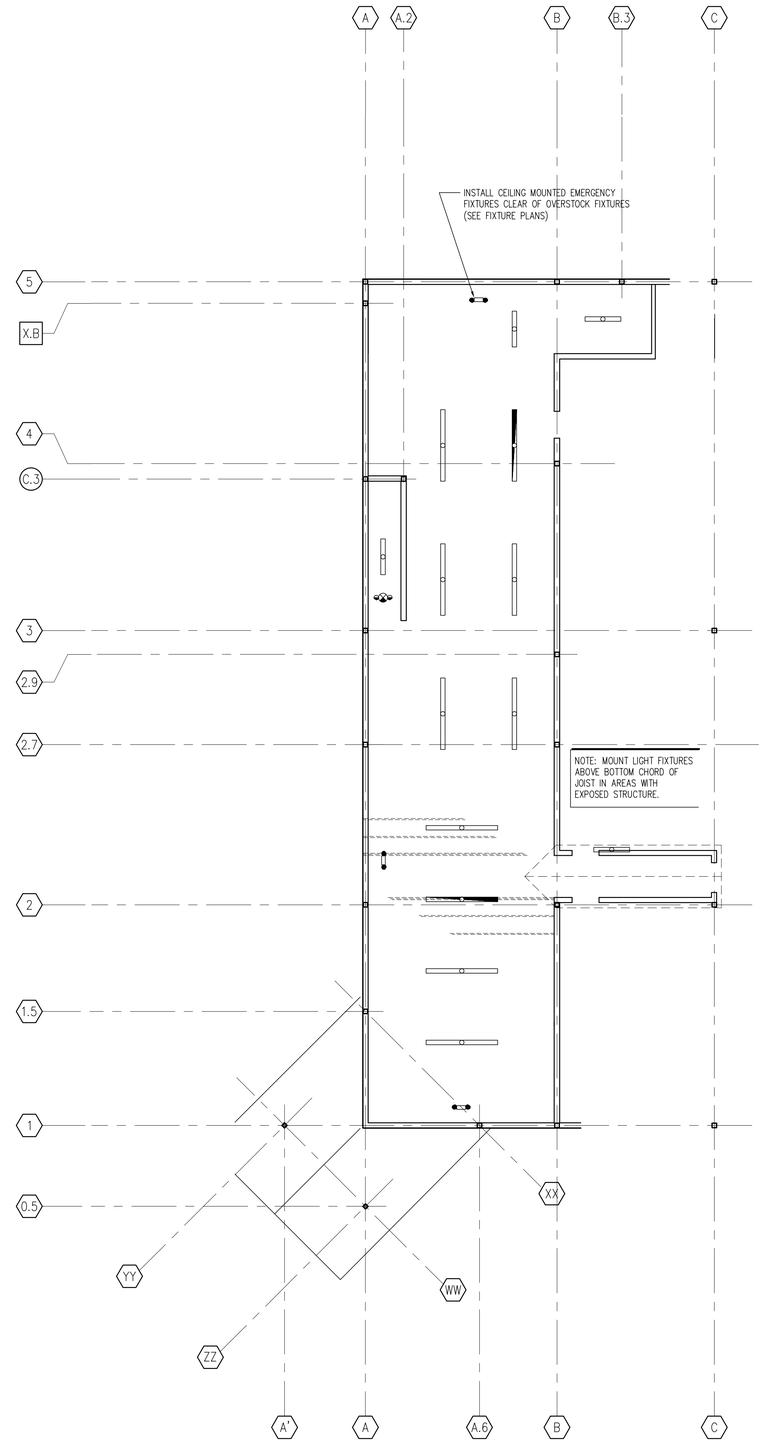

2
A-3.1

UPPER FLOOR
REFLECTED CEILING PLAN

SCALE: 1/8" = 1'-0"

BKA Architects, Inc.
Architecture + Interiors

142 Crescent Street
Brockton, MA 02302

tel : 508.583.5603
fax : 508.584.2914
e-mail : bka@bkaarchs.com

CONSULTANT:

SEAL:

CVS/pharmacy

NEW

STORE NUMBER: 329

NORTHGATE PLAZA
91 AUBURN STREET
PORTLAND, MAINE

DEVELOPER:

A & D REALTY, LLC
5 MILITIA DRIVE
LEXINGTON, MA 02421

REVISIONS:

DRAWING BY:	RTK
DATE:	8/31/09
JOB NUMBER:	209017

TITLE:
MEZZANINE REFLECTED CEILING PLAN

SHEET NUMBER:
A-3.1.1

COMMENTS:
ISSUED FOR CONSTRUCTION

Copyright © 2009 by BKA Architects, Inc. The architectural plan, drawings, designs, specifications and other arrangements in this sheet are and shall remain the property of BKA Architects, Inc. No part thereof shall be copied, disclosed to others, or used in connection with any work or project, other than the specified project for which they have been prepared and delivered, without the express knowledge and written consent of BKA Architects, Inc.

P:\Retail_Proj\209017\CVS #329\Architectural\Sheets\209017_a31.dwg Sep 02 , 2009 - 9:13 am RKUHN

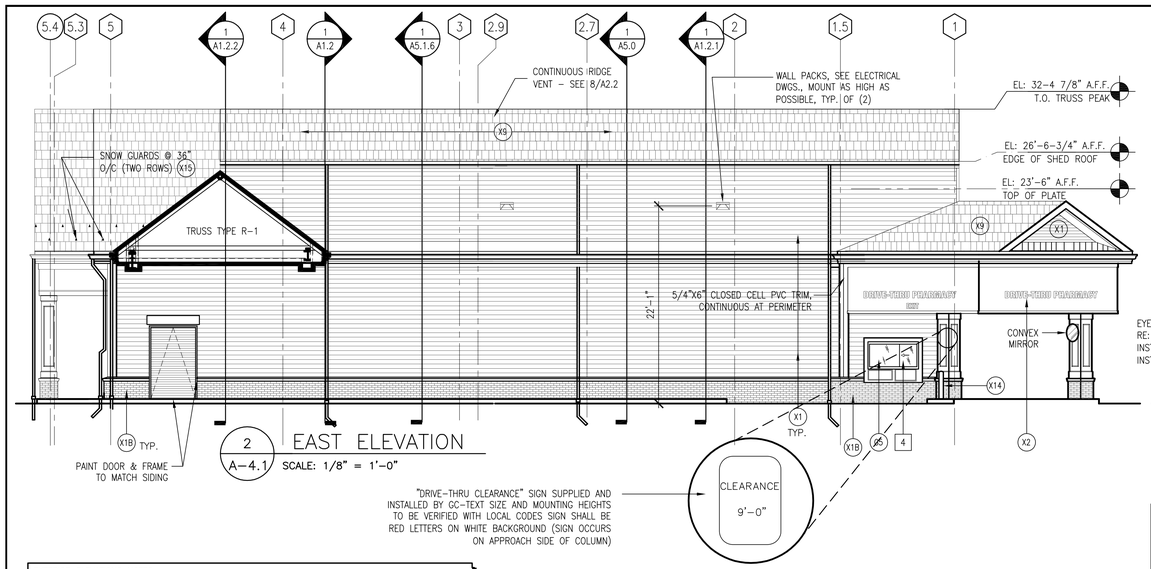

2 EAST ELEVATION
A-4.1 SCALE: 1/8" = 1'-0"

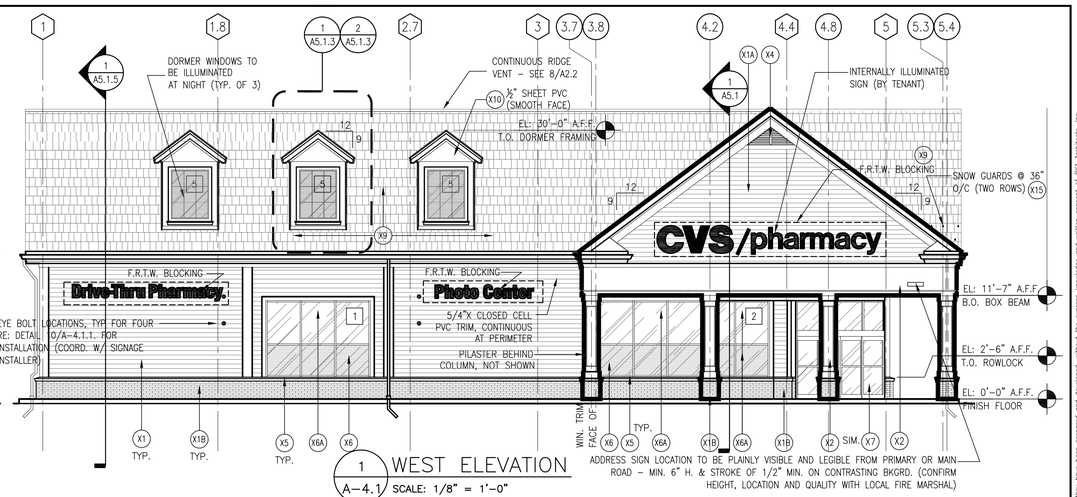

1 WEST ELEVATION
A-4.1 SCALE: 1/8" = 1'-0"

EXTERIOR ELEVATIONS NOTES:

1. TYPICAL WERZALIT SIDING SYSTEM:
PROVIDE CLAPBOARDS W/ 6" T.T.W. W/ ALL INTEGRAL FLASHINGS, INSIDE & OUTSIDE CORNER TRIM, ACCESSORIES, TERMINATIONS, FASTENERS AND ALL APPURTENANCES AS PER MFGR'S STANDARD DETAILS, PRINTED INSTRUCTIONS, RECOMMENDATIONS AND INDUSTRY STANDARDS FOR COMPLIANCE TO WARRANTY REQMTS.

2. J-CHANNELS SHALL BE USED, CONSULT MANUFACTURER FOR PROPER TERMINATION OF EXPOSED CUT ENDS, ALL JOINTS SHALL BE STAGGERED, NO VISUAL JOINT PATTERN SHALL BE EVIDENT, PROVIDE PAINTABLE SEALANT AT JUNCTURE BET. SIDING AND TRIM, (MAX 1/4")

3. G.C. TO PROVIDE COLOR SAMPLES OF ALL PAINTED SIDING AND TRIM PRIOR TO START OF WORK (AND ORDERING OF SIDING)

4. EXTIOR TRIM FOR THE BUILDING SHALL BE CLOSED CELL PVC TRIM. WHERE THE DRAWINGS DENOTE "WOOD" AS OPPOSED TO "PVC", PROVIDE SAME PVC TRIM. ALL PVC IS DISTRIBUTED BY THE SHANNON CORPORATION, 329 B BOSTON POST ROAD SUDBURY, MA. 01776; PH: 978-443-4911; FAX: 978-443-5804; E-MAIL: SHANCORP@AOL.COM

5. ALL JOINTS IN SHEET PVC SHALL BE FLUSH FILLED AND SANDED TO ELIMINATE SEAM.

6. ALL PVC TRIM ABUTTING WERZALIT SIDING SHALL BE 5/4" UNLESS NOTED OTHERWISE

SIGNAGE NOTES:

1. ALL BUILDING SIGNAGE SUPPLIED AND INSTALLED BY CVS

2. COORDINATE EXTERIOR SIGNAGE REQUIREMENTS & RESTRICTIONS WITH LOCAL CODES.

3. SEE SIGNAGE SHEET A8.1 FOR ADDITIONAL NOTES & DETAILS

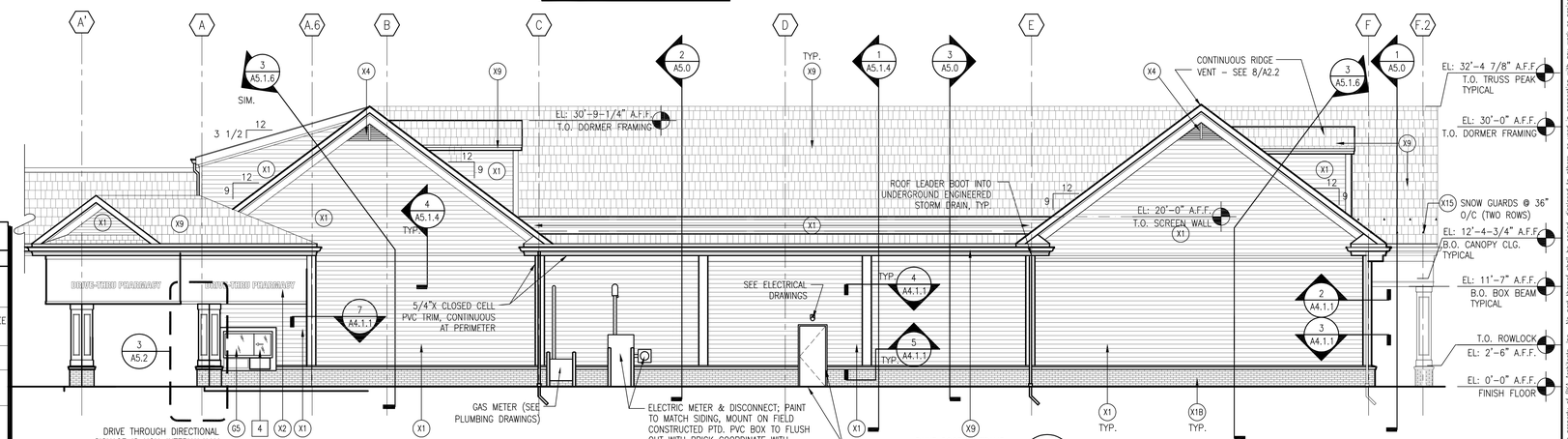

4 NORTH ELEVATION
A-4.1 SCALE: 1/8" = 1'-0"

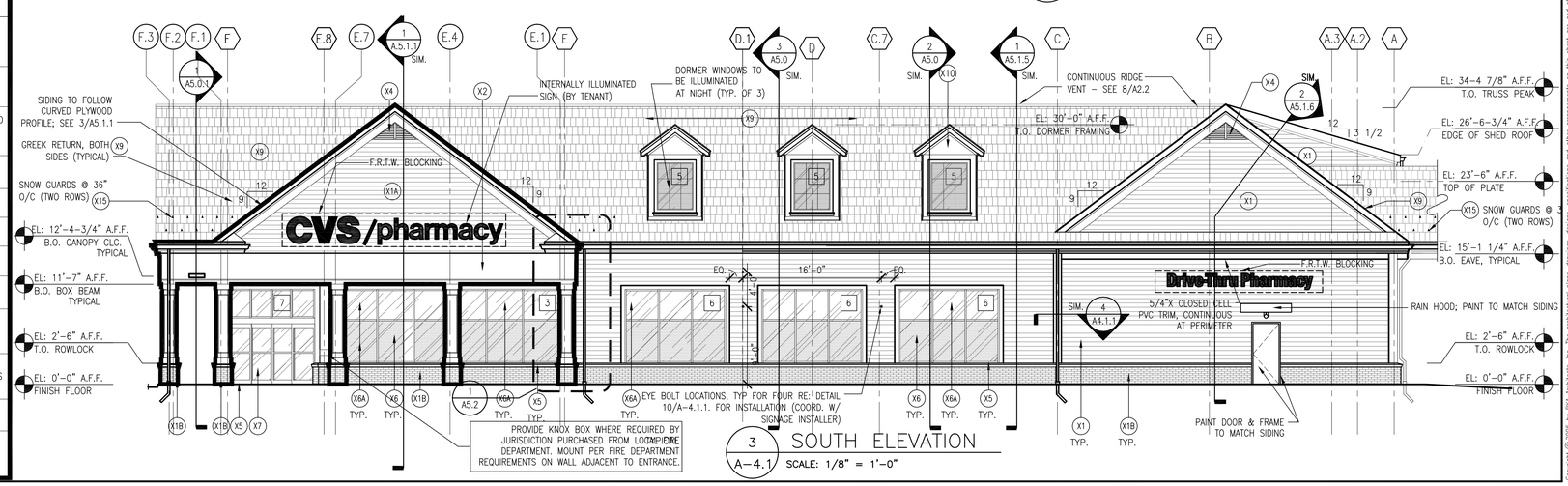

3 SOUTH ELEVATION
A-4.1 SCALE: 1/8" = 1'-0"

EXTERIOR FINISH SCHEDULE

TAG	MATERIAL/MFG.	COLOR/NO.	NOTES
X1	"WEREZALIT" RESIN-BONDED WOOD SIDING PANEL SYSTEM	BENJAMIN MOORE #1600	AMERICANA 6" EXPOSURE, TRADITION (SMOOTH SURFACE); SEE NOTE #4. PROVIDE PAINTED SAMPLE TO ARCHITECT
X1A	"WEREZALIT" RESIN-BONDED WOOD SIDING PANEL SYSTEM	BENJAMIN MOORE 319-79	HERITAGE 6" EXPOSURE, TRADITION (SMOOTH SURFACE); SEE NOTE #4. PROVIDE PAINTED SAMPLE TO ARCHITECT
X1B	EXTERIOR FACE BRICK	CVS RED	MORTAR COLOR – NATURAL GREY
X1C	EXTERIOR CEDAR CLAPBOARD SIDING SYSTEM	PRIME & PAINT TO MATCH EXISTING	EXPOSURE TO MATCH EXISTING
X1D	C.M.U. BLOCK (SPLIT FACED, SINGLE SCORE)	NATURAL GSF 000" (TO MATCH EXISTING)	MANUFACTURED BY GENEST CONCRETE, SANFORD, ME (BUTCH KENEDY: 207-324-3250 X155)
X1E	EXTERIOR FACE BRICK	TO MATCH EXISTING EXTEIROR FACE BRICK	COORDINATE WITH GENEST CONCRETE, SANFORD, ME (BUTCH KENEDY: 207-324-3250 X155)
X1F	WOOD CROWN MOULDING	TO MATCH EXISTING	PROVIDE IN CLOSED CELL PVC IF AVIALABLE
X2	CLOSED CELL PVC TRIM	SMOOTH FACE; PAINT BENJAMIN MOORE 319-79 (TYPICAL AT ALL PVC TRIM)	PROVIDE PAINT SAMPLE TO ARCHITECT; SEE NOTE #4
X3	CLOSED CELL SHEET PVC CLADDING	5/4" ABBUTTING WOOD SIDING; OTHERWISE 1"	PROVIDE PAINT SAMPLE TO ARCHITECT; SEE NOTE #4
X4	FYPON DECORATION	BENJAMIN MOORE 319-79	TRIANGULAR LOUVER FTRLV 60 X 23 BY "FYPON MOULDED MILLWORK", GABLE DECORATION, PROVIDE MAN. WITH ALL NECESSARY DIMENSIONS FOR SIZE
X5	WIND./DOOR STOREFRONT "KAWNEER" TRIFAB II	VALSPAR IND. COATING #391A226, COLONIAL WHITE	#451-T SERIES FLUROPON FINISH Tel. 1-800-366-3698
X6	1" INSULATED FLOAT GLASS	OPAQUE SUBDUDED GREY SPANDREL	STOREFRONT WINDOWS
X6A	1" INSULATED FLOAT GLASS	CLEAR	STOREFRONT WINDOWS
X7	1/4" LAM SAFETY GLASS	CLEAR	DOORS & SIDELIGHTS
X8	PREFINISHED METAL COPING CAP	COLOR TO MATCH ADJACENT VENEER MASONRY	---
X9	FIBERGLASS ASPHALT ARCHITECTURAL ROOF SHINGLE.	PEWTER BLEND G.C. TO SUBMIT SAMPLES	GAF TIMBERLINE 30 YEAR – ARCHITECTURAL SHINGLE OR APPROVED EQUAL
X10	EXTERIOR PAINTED SURFACE BENJAMIN MOORE	ATRIUM WHITE #319-79	PROVIDE PAINT SAMPLE TO ARCHITECT; COLOR TO MATCH FACTORY FINISHED WINDOW FRAME ALL EXTERIOR SURFACES NOT FACTORY PRIMED & PAINTED TO RECIVE X10
X14	EXTERIOR PIPE BOLLARDS BENJAMIN MOORE	SAFETY YELLOW 4208-9400	DEVFLEX WB ACRYLIC, 4208- SERIES, HIGH PERFORMANCE
X15	STAINLESS STEEL SNOW GUARDS	ZALESKI SHOW GUARDS, MODEL #8 (STAINLESS STEEL)	PROVIDE TWO ROWS (STAGGERED), @ 36" O/C

P:\Retail_Proj\209017\CVS #329\Architectural\Sheets\209017_A41.dwg Sep 02, 2009 - 9:14 am RKUHN

BKA Architects, Inc.
Architecture + Interiors
142 Crescent Street
Brockton, MA 02302
tel: 508.583.5603
fax: 508.584.2914
e-mail: bka@bkaarchs.com

CONSULTANT:

SEAL:

CVS/pharmacy

NEW

STORE NUMBER: 329

NORTHGATE PLAZA
91 AUBURN STREET
PORTLAND, MAINE

DEVELOPER:

A & D REALTY, LLC
5 MILITIA DRIVE
LEXINGTON, MA 02421

REVISIONS:

DRAWING BY: RTK
DATE: 8/31/09
JOB NUMBER: 209017
TITLE: EXTERIOR ELEVATIONS
SHEET NUMBER: A-4.1

COMMENTS:
ISSUED FOR CONSTRUCTION

Copyright © 2009 by BKA Architects, Inc. The architectural plans, drawings, designs, specifications and other documents on this sheet are and shall remain the property of BKA Architects, Inc. No part hereof shall be copied, disclosed to others, or used in connection with any work or project, other than the specified project for which they have been prepared and delivered, without the express knowledge and written consent of BKA Architects, Inc.

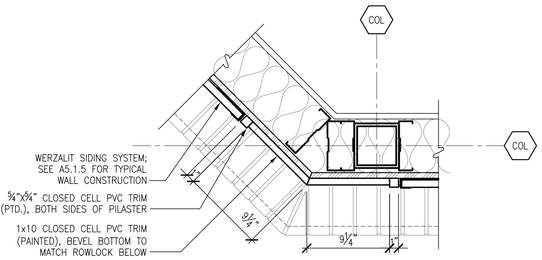

7 A4.1.1 PLAN DETAIL – CORNER TRIM
SCALE: 1 1/2" = 1'-0"

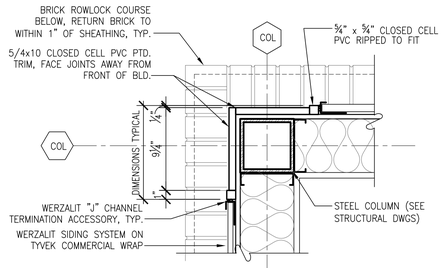

3 A4.1.1 PLAN DETAIL –CORNER PILASTER
SCALE: 1 1/2" = 1'-0"

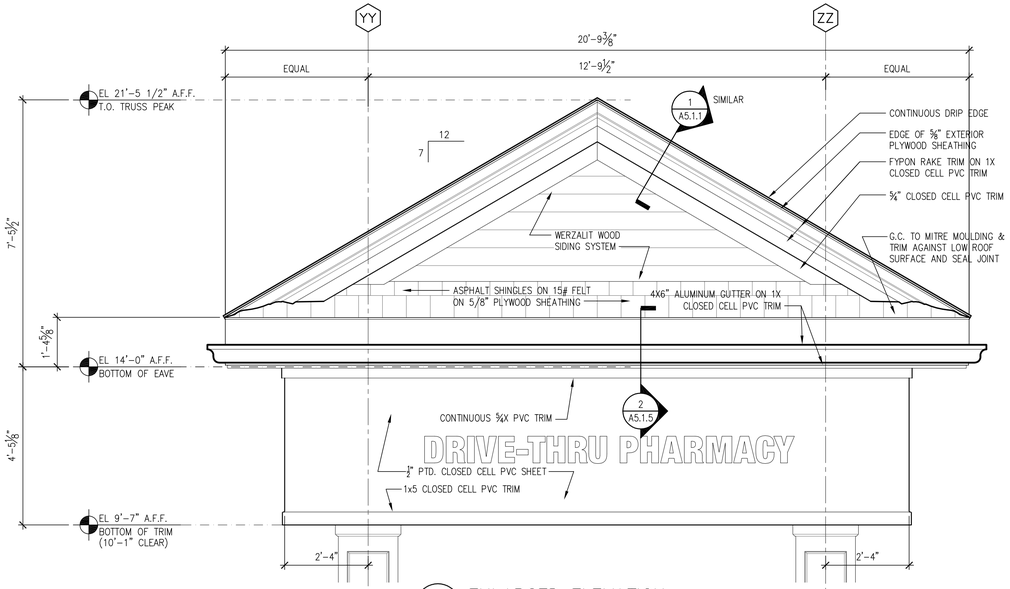

1 A4.1.1 ENLARGED ELEVATION
SCALE: 1/2" = 1'-0"
SEE A4.1 FOR TYPICAL DRIVE THRU SIGNAGE NOTES

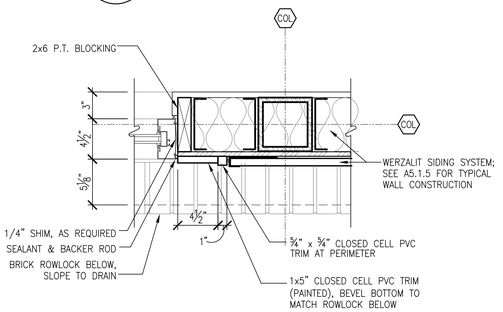

8 A4.1.1 WINDOW TRIM DETAIL
SCALE: 1 1/2" = 1'-0"

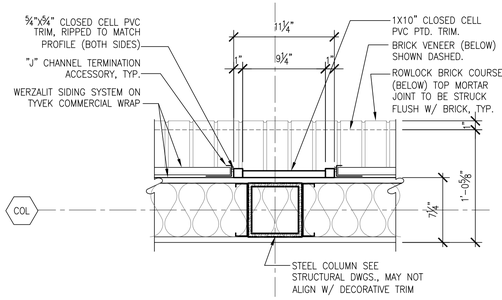

4 A4.1.1 PLAN DETAIL – DECORATIVE TRIM
SCALE: 1 1/2" = 1'-0"

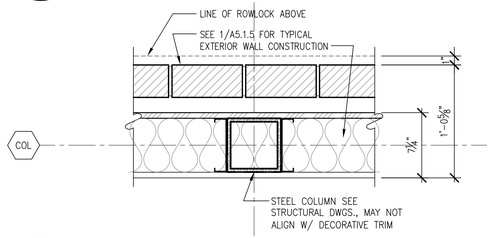

5 A4.1.1 PLAN DETAIL – DECORATIVE TRIM
SCALE: 1 1/2" = 1'-0"

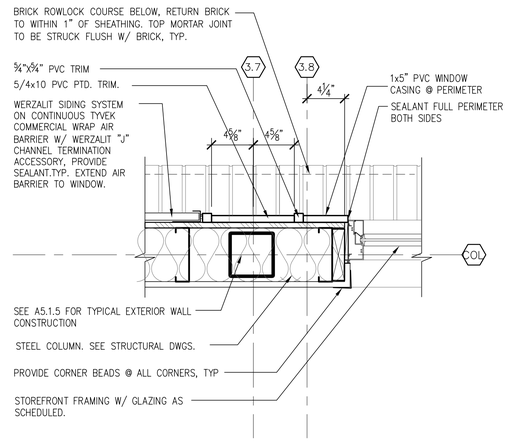

9 A4.1.1 EXTERIOR PILASTER DETAIL SHOWING WINDOW JAMB
SCALE: 1 1/2" = 1'-0"

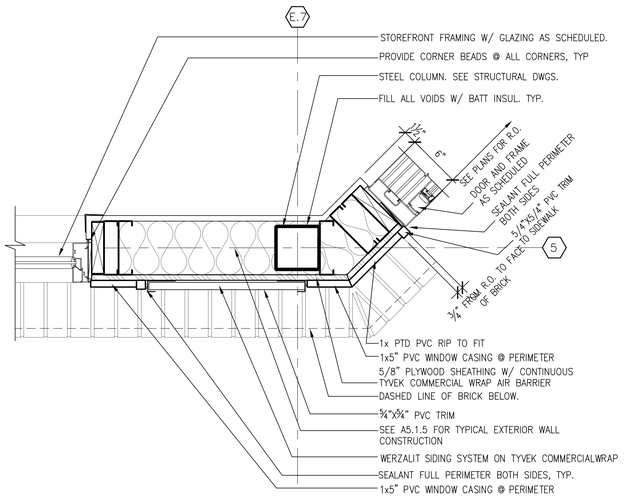

6 A4.1.1 EXTERIOR VESTIBULE JAMB DETAIL @ DOOR AND WINDOW
SCALE: 1 1/2" = 1'-0"

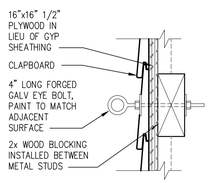

10 A4.1.1 EYE-BOLT DETAIL
SCALE: 3" = 1'-0"

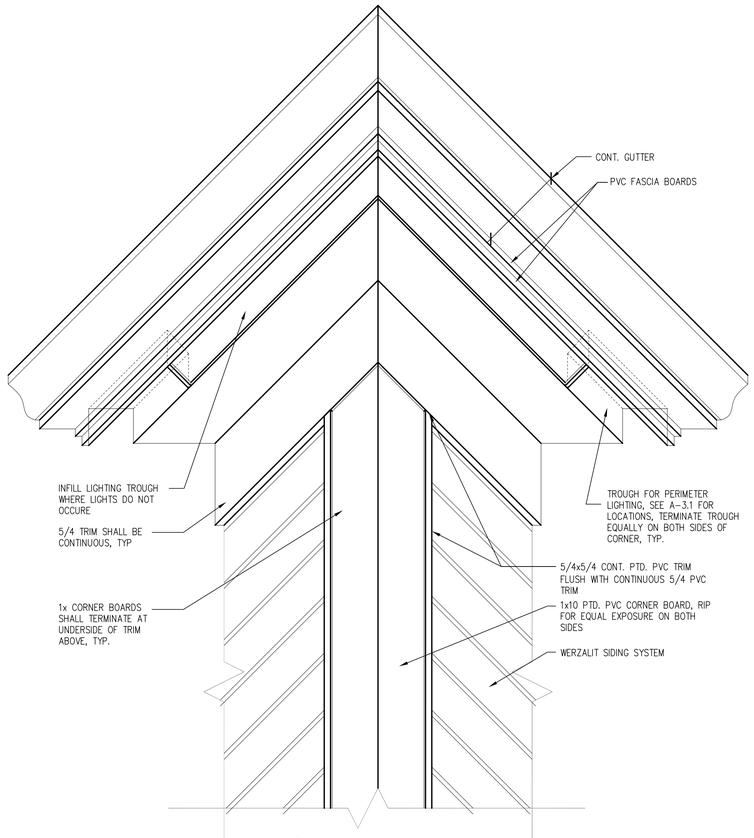

2 A4.1.1 CORNER AXONOMETRIC
SCALE: 1 1/2" = 1'-0"

P:\Retail_Proj\209017\CVS #329\Architectural\Sheets\209017_A411.dwg Sep 02 , 2009 - 9:14 am RKUHN

BKA Architects, Inc.
Architecture + Interiors
142 Crescent Street
Brockton, MA 02302
tel : 508.583.5603
fax : 508.584.2914
e-mail : bka@bkaarchs.com

CONSULTANT:

SEAL:

CVS/pharmacy

NEW

STORE NUMBER: 329

NORTHGATE PLAZA
91 AUBURN STREET
PORTLAND, MAINE

DEVELOPER:

A & D REALTY, LLC
5 MILITIA DRIVE
LEXINGTON, MA 02421

REVISIONS:

DRAWING BY:	RTK
DATE:	8/31/09
JOB NUMBER:	209017

TITLE:
EXTERIOR TRIM DETAILS

SHEET NUMBER:
A-4.1.1

COMMENTS:
ISSUED FOR CONSTRUCTION

Copyright © 2009 by BKA Architects, Inc. The architectural plans, drawings, designs, specifications and other arrangements on this sheet are and shall remain the property of BKA Architects, Inc. No part thereof shall be copied, disclosed to others, or used in connection with any work or project, other than the specified project for which they have been prepared and delivered, without the express knowledge and written consent of BKA Architects, Inc.

NOTE:
W6 APPLY WHERE FIXTURES DO NOT EXIST TO 87" HIGH AFF, COORDINATE WITH F-1.
P1 WILL BE APPLIED TO UNDERSIDE AND BACKSIDE OF VALANCE.
ALL PERIMETER GRAPHICS TO BE HUNG 6" FROM CEILING.

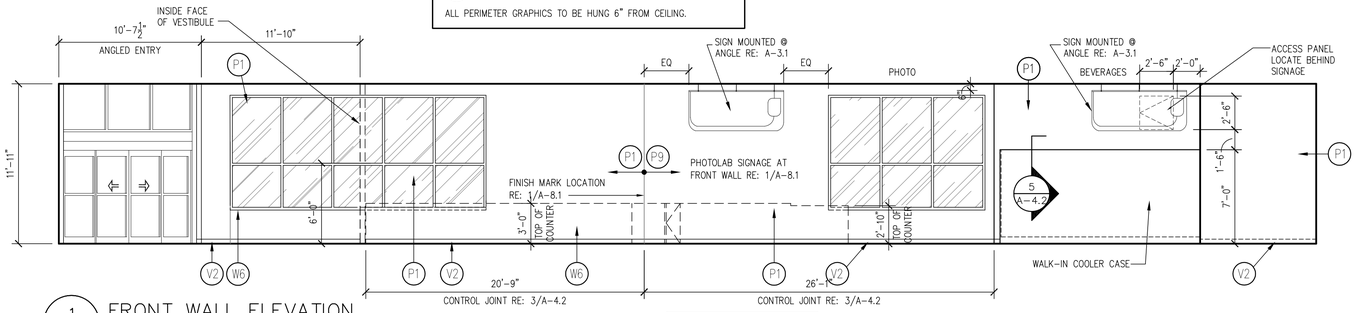

1 A-4.2 FRONT WALL ELEVATION
SCALE: 3/16" = 1'-0"

NOTE:
RE: SHEET A-7.2 FOR FINISH SCHEDULE

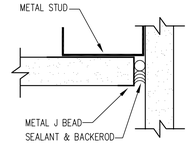

2 A-4.2 GYPSUM BOARD CONTROL JOINT
SCALE: NTS

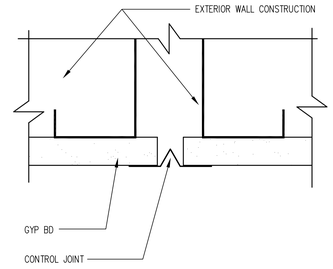

3 A-4.2 GYPSUM BOARD CONTROL JOINT
SCALE: NTS

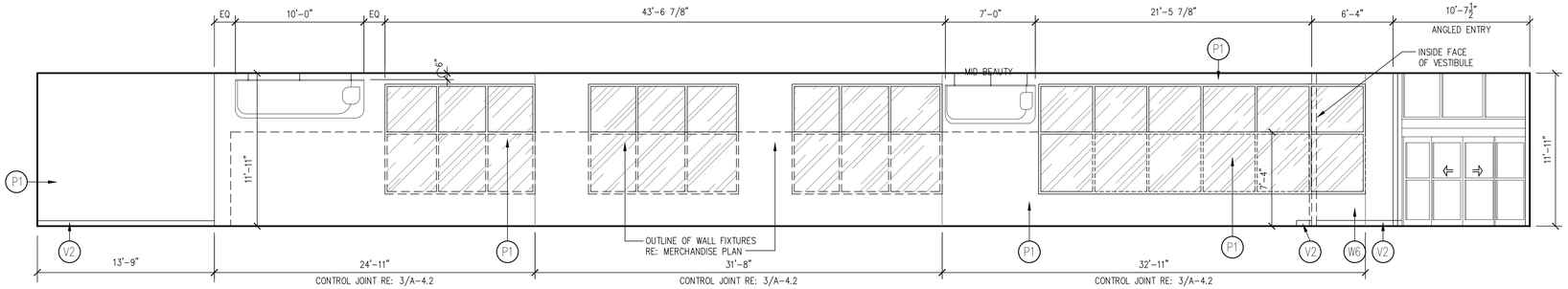

4 A-4.2 LEFT SIDEWALL ELEVATION
SCALE: 3/16" = 1'-0"

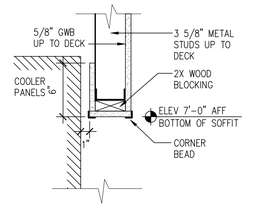

5 A-4.2 WALK-IN COOLER SOFFIT DETAIL
SCALE: 1 1/2" = 1'-0"

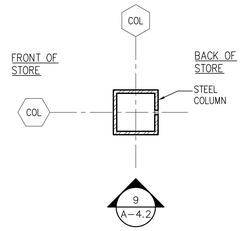

6 A-4.2 INTERIOR COLUMN DETAIL (TYP)
SCALE: 1 1/2" = 1'-0"

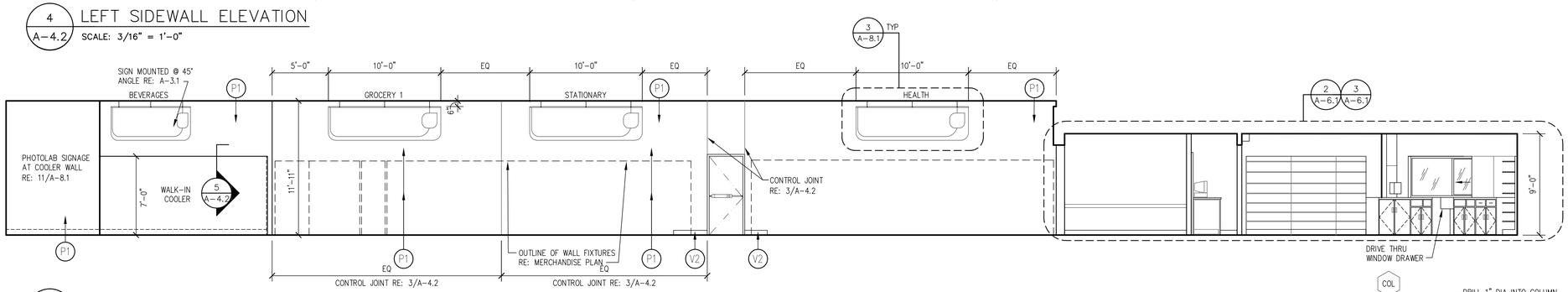

7 A-4.2 RIGHT SIDEWALL ELEVATION
SCALE: 3/16" = 1'-0"

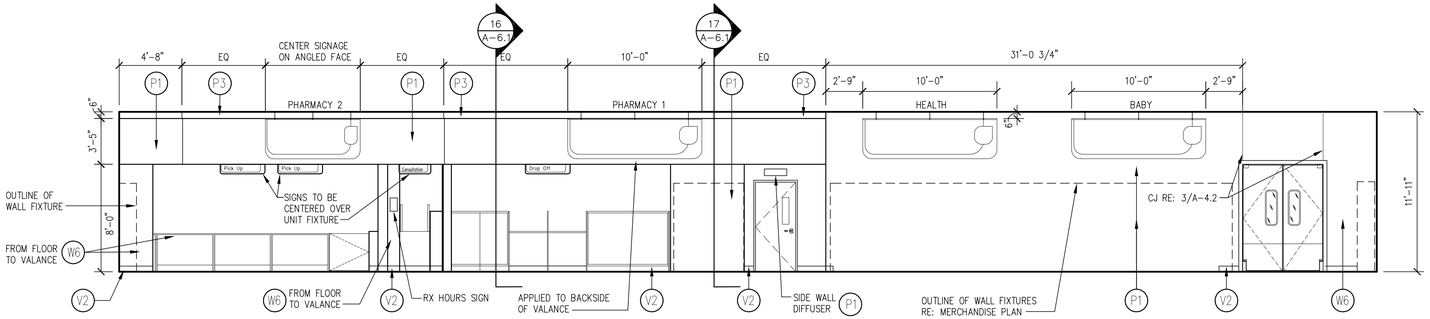

8 A-4.2 BACK WALL ELEVATION
SCALE: 3/16" = 1'-0"

NOTE:
FEED WIRE THRU DRILL HOLES WITH PULL STRING. INSTALL WIRE BUSHINGS @ ALL HOLES.

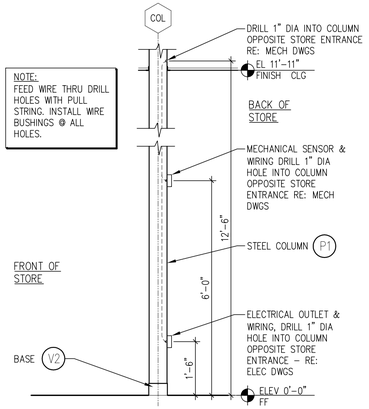

9 A-4.2 INTERIOR COLUMN DETAIL
SCALE: 1/2" = 1' - 0"

BKA Architects, Inc.
Architecture + Interiors
142 Crescent Street
Brockton, MA 02302
tel : 508.583.5603
fax : 508.584.2914
e-mail : bka@bkaarchs.com

CONSULTANT:

SEAL:

CVS/pharmacy

NEW

STORE NUMBER: 329
NORTHGATE PLAZA
91 AUBURN STREET
PORTLAND, MAINE

DEVELOPER:
A & D REALTY, LLC
5 MILITIA DRIVE
LEXINGTON, MA 02421

REVISIONS:

DRAWING BY:	RTK
DATE:	8/31/09
JOB NUMBER:	209017

TITLE:
INTERIOR ELEVATIONS- RETAIL AREA & DETAILS

SHEET NUMBER:
A-4.2

COMMENTS:
ISSUED FOR CONSTRUCTION

Copyright © 2009 by BKA Architects, Inc. The architectural plans, drawings, designs, specifications and other documents, in this sheet are and shall remain the property of BKA Architects, Inc. No part thereof shall be copied, disclosed to others, or used in connection with any work or project, other than the specified project for which they have been prepared and delivered, without the express knowledge and written consent of BKA Architects, Inc.

P:\Retail_Proj\209017\CVS #329\Architectural\Sheets\209017_a42.dwg Sep 02 , 2009 - 9:15 am RKUHN

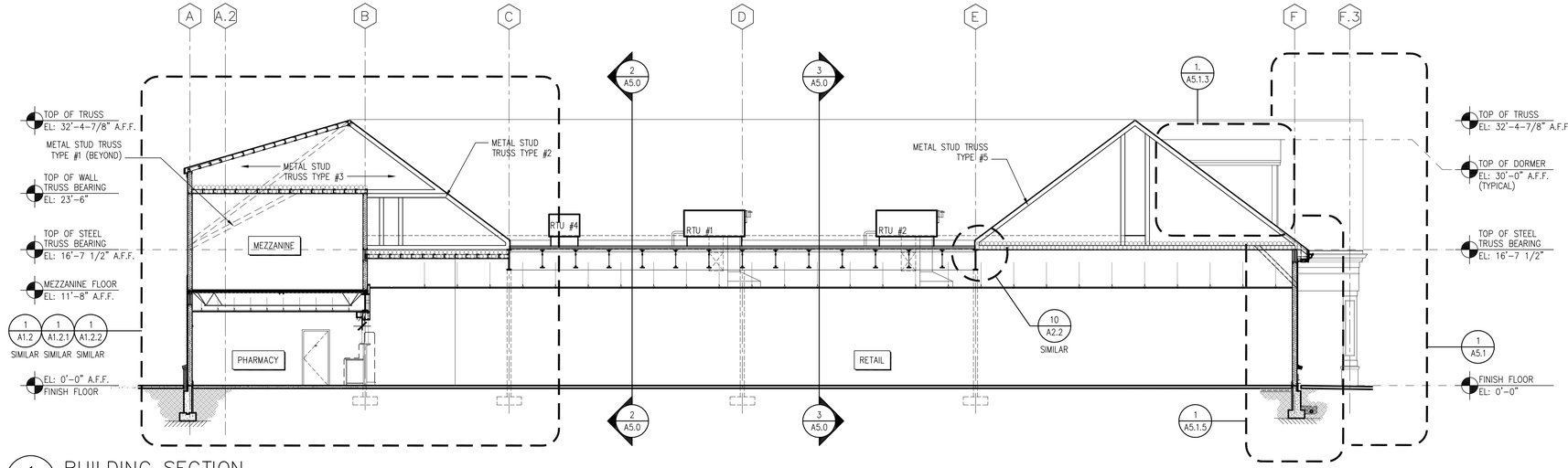

1 A-5.0 BUILDING SECTION
SCALE: 1/8" = 1'-0"

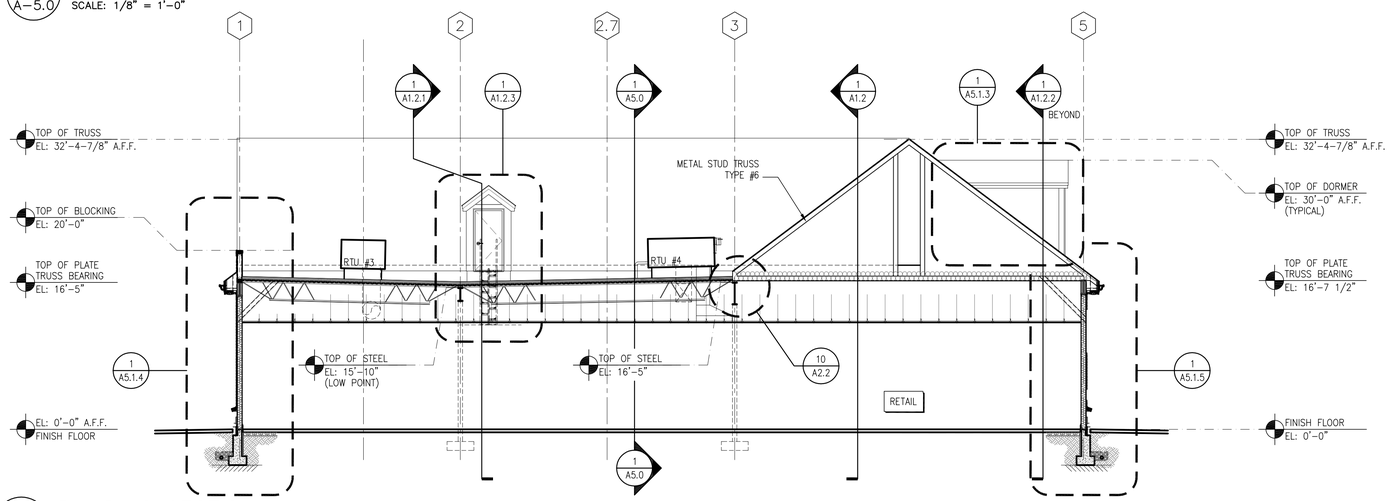

1 A-5.0 BUILDING SECTION
SCALE: 1/8" = 1'-0"

IT IS IMPERATIVE THAT THE CONDITIONED AIR AT THE RETAIL LEVEL NOT MIX WITH THE UNCONDITIONED AIR IN THE ATTIC. G.C. SHALL MAKE SEVERAL VISUAL INSPECTIONS & SEAL ANY BREACHES, AND PROVIDE BATT INSULATION ALONG THE HORIZONTAL & VERTICAL PLANES OF THIS ENVELOPE (I.E.: IN THE ATTIC, AT THE V.R.C.)

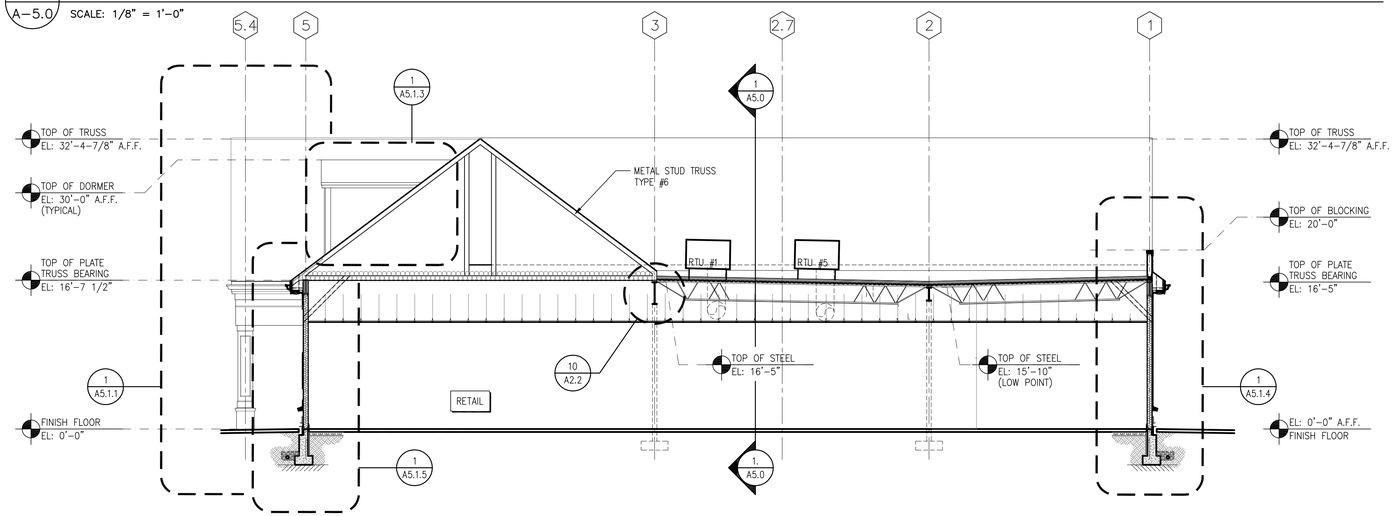

1 A-5.0 BUILDING SECTION
SCALE: 1/8" = 1'-0"

TYPICAL DESIGN CRITERIA
CVS: PORTLAND, ME #324

ALL MATERIALS AS SPECIFIED IN THIS CHART SHALL BE TYPICAL. DISCREPANCIES SHALL BE BROUGHT TO ARCHITECT'S ATTENTION PRIOR TO START OF WORK.

STUD FRAMING	EXTERIOR WALLS	6" (18 GA. MIN – SEE STRUCTURAL DRAWINGS)
	INTERIOR WALLS	SEE PARTITION SCHEDULE
INSULATION	FLAT ROOF	2 LAYERS 2" POLYISOCYANURATE FOR R-25 MIN.
	SLOPED ROOF	ONE LAYER, 12" R-38 BATTS W/ INTEGRAL VAPOR BARRIER
	EXTERIOR WALLS	ONE LAYER 6" R-21 HIGH DENSITY UNFACED BATTS FRICTION FIT ONE LAYER, 3½" HIGH DENSITY R-13 BATTS (UNFACED) AS SHOWN AT PERIMETER BEAMS BOTH SIDES
	INTERIOR WALLS	ONE LAYER, 3½" SOUND ATTENUATING BATTS (UNFACED) AS SHOWN ON THE PARTITION TYPES
	SLAB PERIMETER & FOUNDATION	SLAB EDGE: 1" RIGID INSULATION (R-5) PERIMETER: 2" RIGID INSULATION FROM TOP OF FOOTING TO UNDERSIDE OF SLAB (R-10)
FOUNDATION WATERPROOFING	TREMPROOF 250GC SINGLE COMPONENT, RAPID CURING, FLUID-APPLIED ELASTOMERIC WATERPROOFING MEMBRANE	
EXTERIOR SHEATHING	WALLS	½" DENS-GLASS GOLD EXTERIOR GYPSUM SHEATHING. **DO NOT TAPE SEAMS OF THIS MATERIAL** (SEE "AIR BARRIER SECTION FOR THESE REQUIREMENTS). SUBSTITUTE ⅝" F.R.T.W. EXTERIOR PLYWOOD SHEATHING BEHIND ALL EXTERIOR SIGNAGE LOCATIONS
	ROOF	⅝" F.R.T.W. EXTERIOR PLYWOOD SHEATHING
BRICK VENEER SYSTEM	4" BRICK VENEER W/ BRICK VENEER ANCHORING SYSTEM OVER 2" AIR SPACE ON TYPICAL EXTERIOR WALL CONSTRUCTION.	
	ANCHORING SYSTEM	ANCHOR SPACING: VERTICAL: 16" O.C. MAX. HORIZONTAL: 24" O.C. MAX. "DUR-O-WALL, INC." D/A 210 GALVANIZED ADJUSTABLE WALL ANCHORS WITH 5" WIDE x 5" DEEP 3/16" DIA. GALVANIZED TRIANGLE TIES. ANCHORS SHALL BE ATTACHED TO METAL STUD WALL WITH D/A BO7 10-16x1-1/2 HWH SELF-DRILLING, SELF-TAPPING SCREWS W/ NEOPRENE WASHERS. ANCHORS SHALL COVER A MAXIMUM OF 2 S.F. PER TIE. AN ALTERNATE ANCHOR SHOULD BE OF EQUAL OR BETTER STRENGTH AND QUALITY.
	MORTAR DROPPING COLLECTION SYSTEM	2X10" "MORTAR NET" CAVITY WALL DRAINAGE SYSTEM, MADE FROM RECYCLED POLYESTER OR HIGH DENSITY POLYETHYLENE.
	CELL VENTS	DA1006 CELL VENTS @ 24" O/C (COLOR TO BE CLEAR OR GREY TO MATCH MORTAR). PROVIDE AT BASE & TOP OF MASONRY WALLS ABOVE 25'-0" HIGH. TO EXTEND PAST C.M.U. BACKUP (IF ANY) TO FACE OF DRAINAGE PLANE **WEEP TUBES WITH COTTON WICKS WILL NOT ACCEPTED OR ALLOWED**
	THRU-WALL FLASHING	"DUPONT" THRU-WALL FLASHING ON ACCEPTABLE PRIMER ("3M" HI-STRENGTH 90 OR SM). PROVIDE PREFABRICATED OUTSIDE & INSIDE CORNERS AS REQUIRED. EXTEND FLASHING PAST TOP OF MORTAR NET 8" MINIMUM. INSTALL ATOP MORTAR BEVEL
AIR BARRIER SYSTEM	"DUPONT" TYVEK COMMERCIAL WRAP. LAP JOINTS PER MANUFACTURER'S INSTALLATION INSTRUCTIONS & TAPE WITH TYVEK TAPE. EXTEND PAST TOP OF THRU-WALL FLASHING 4" MIN. & TAPE JOINT WATER-TIGHT **"HOUSEWRAP" WILL NOT BE ACCEPTED OR ALLOWED.**	
	FASTENERS	PROVIDE "DUPONT" TYVEK 1"DIA. WRAP CAPS @ 16" O/C HORIZONTALLY & VERTICALLY. USE MANUFACTURER APPROVED STAPLES & PLASTIC CAPS
	TAPE	"DUPONT" TYVEK TAPE, 3" WIDE.
	FLANGED WINDOWS	HEAD & JAMB FLASHING: 4" "DUPONT" TYVEK STAIGHT-FLASH SILL FLASHING: 9" "DUPONT" TYVEK FLEX-WRAP
	NON-FLANGED WINDOWS	ENTIRE PERIMETER: 4" "DUPONT" TYVEK STAIGHT-FLASH
	TOP OF PERIMETER	ONE LAYER, TYVEK "FLASHING TAPE" (4" X 20mil)
EXTERIOR CLADDING	STEEL 6" WERZALIT SIDING SYSTEM AS SHOWN ON THE EXTERIOR ELEVATIONS	
EXTERIOR TRIM	CLOSED CELL PVC & FYPON MOULDING AS SHOWN ON EXTERIOR ELEVATIONS. ALL CLOSED CELL PVC & FYPON TRIM TO BE MOUNTED ON ⅝" F.R.T.W. EXTERIOR PLYWOOD SHEATHING OR BLOCKING	
INTERIOR GYPSUM SHEATHING	5/8" GYPSUM BOARD AS FOLLOWS: • ALL GYPSUM BOARD BELOW FINISHED CEILING TO BE TAPED & PAINTED (I.E.: ALL EXPOSED GYPSUM BOARD) • ALL GYPSUM BOARD ABOVE FINISHED CEILING TO BE FIRE TAPED (I.E.: ALL UNEXPOSED OR CONCEALED GYPSUM BOARD)	
VAPOR RETARDER	EXTERIOR WALLS	6 MIL. POLYETHYLENE SHEET, BETWEEN INTERIOR GYPSUM SHEATHING & METAL STUDS
	UNDER SLAB	10 MIL. POLYETHYLENE SHEET IN DIRECT CONTACT WITH SLAB. TAPE ALL SEAMS
FOAM SEALANTS	EXTERIOR WALLS	AT WOOD TRUSS TOP PLATE & INTERIOR GYPSUM SHEATHING INTERSECTION, SEAL PERIMETER WITH POLYURETHANE FOAM SEALANT.
	FIRESTOP	HILTI CP-620 FIRE FOAM FOR SMALL TO MEDIUM SIZED OPENINGS & COMPLEX SHAPES (AS REQUIRED)
FIRE RESISTANT TREATED WOOD	ALL WOOD (OTHER THAN P.T. ROOF EDGE BLOCKING) INSIDE A SPACE OF NON-COMBUSTIBLE CONSTRUCTION SHALL BE F.R.T.W. INCLUDING BUT NOT LIMITED TO CATWALKS, SIGN BACKING; WOOD SHIMS, BLOCKING, ETC.	

FYPON SCHEDULE

PART #	SIZE
FTRLV-60X23	FUNCTIONAL LOUVER 60"W X 23"H @ 9:12 PITCH
MLD-628-8	CHAIR RAIL ¾" x ¾"x 8'-0"
MLD-454-12	CROWN 3 7/32x 4 7/32" x 12'-0"

BKA Architects, Inc.
Architecture + Interiors
142 Crescent Street
Brockton, MA 02302
tel : 508.583.5603
fax : 508.584.2914
e-mail : bka@bkaarchs.com

CONSULTANT:

SEAL:

CVS/pharmacy

NEW

STORE NUMBER: 329

NORTHGATE PLAZA
91 AUBURN STREET
PORTLAND, MAINE

DEVELOPER:

A & D REALTY, LLC
5 MILITIA DRIVE
LEXINGTON, MA 02421

REVISIONS:

DRAWING BY: RTK
DATE: 8/31/09
JOB NUMBER: 209017

TITLE:
BUILDING SECTION & DESIGN CRITERIA

SHEET NUMBER:
A-5.0

COMMENTS:
ISSUED FOR CONSTRUCTION

Copyright © 2009 by BKA Architects, Inc. The architectural plans, drawings, specifications and other components, in hard copy and electronic format, are and shall remain the property of BKA Architects, Inc. They are loaned only for use, disclosure to others, or reuse in connection with the work of project, other than the specified project for which they have been prepared and delivered, without the express knowledge and written consent of BKA Architects, Inc.

P:\Retail_Proj\209017\CVS #329\Architectural\Sheets\209017_A50.dwg Sep 02, 2009 - 9:16 am RKUHN

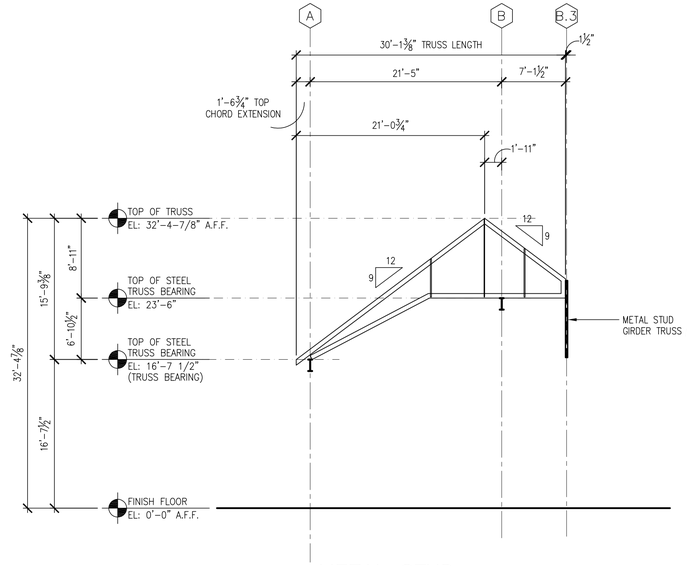

METAL STUD TRUSS TYPE #1

(LOCATION PLAN BELOW IS N.T.S.)

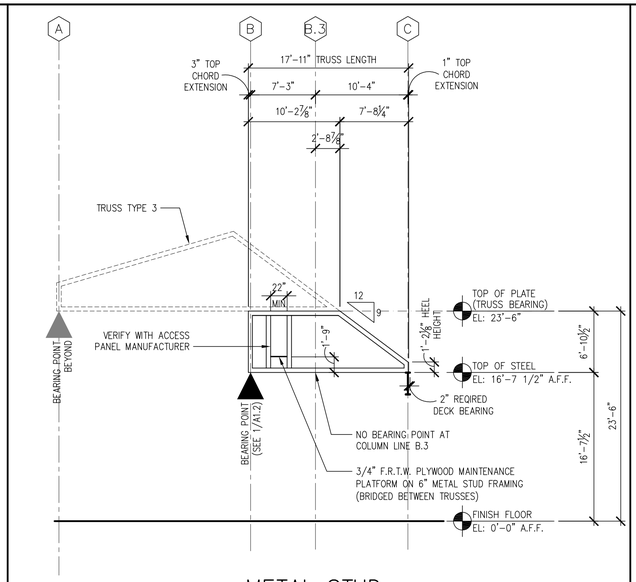

METAL STUD TRUSS TYPE #2

(LOCATION PLAN BELOW IS N.T.S.)

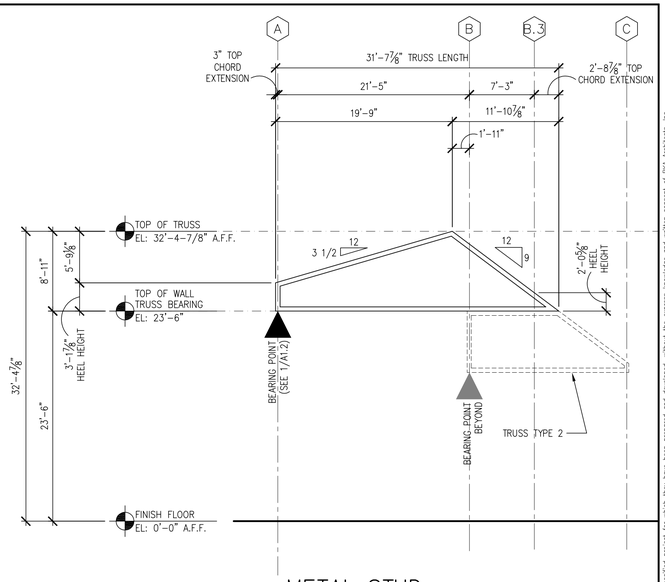

METAL STUD TRUSS TYPE #3

(LOCATION PLAN BELOW IS N.T.S.)

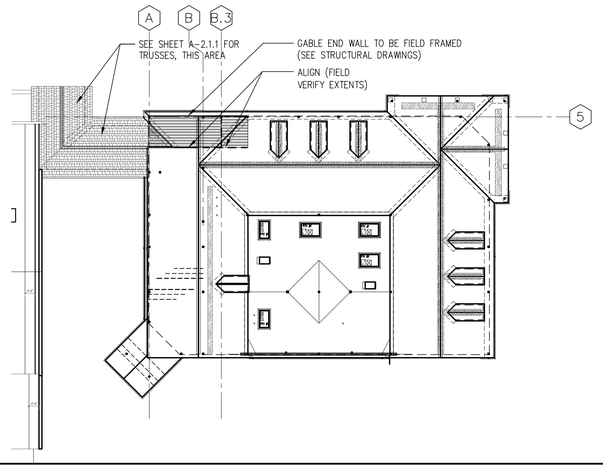

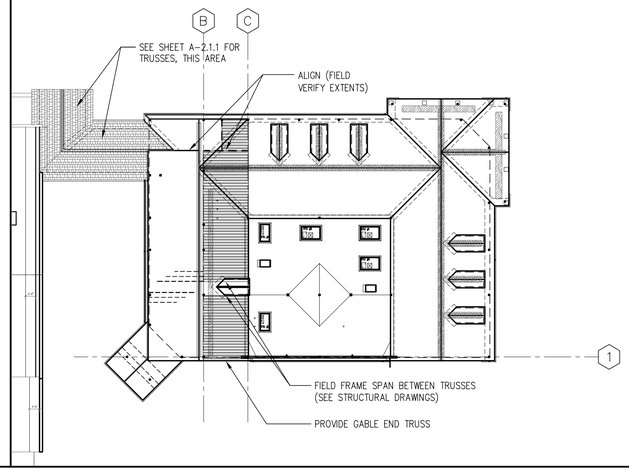

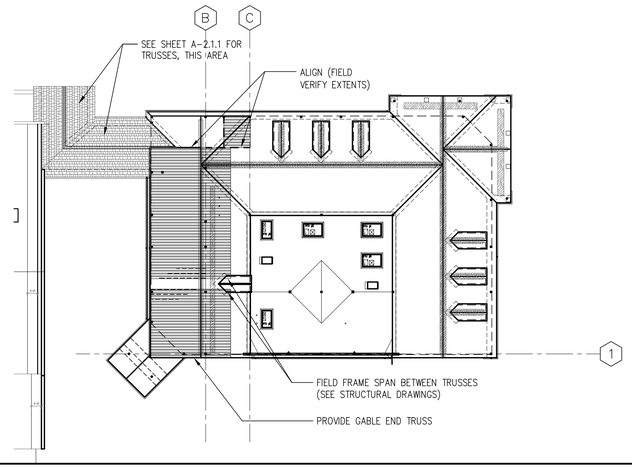

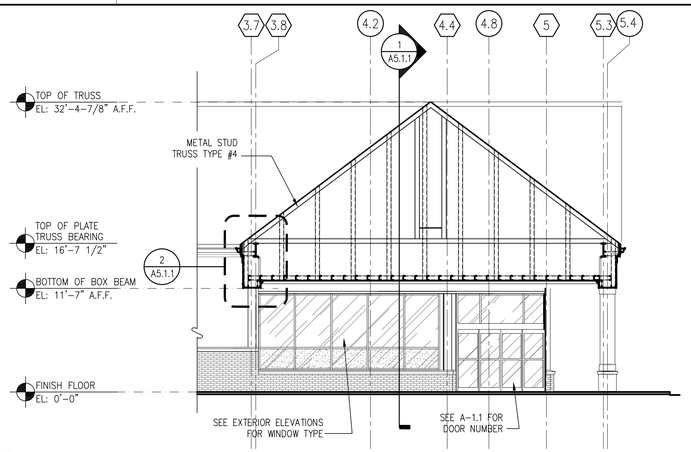

1 A-5.0 BUILDING SECTION

SCALE: 1/8" = 1'-0"

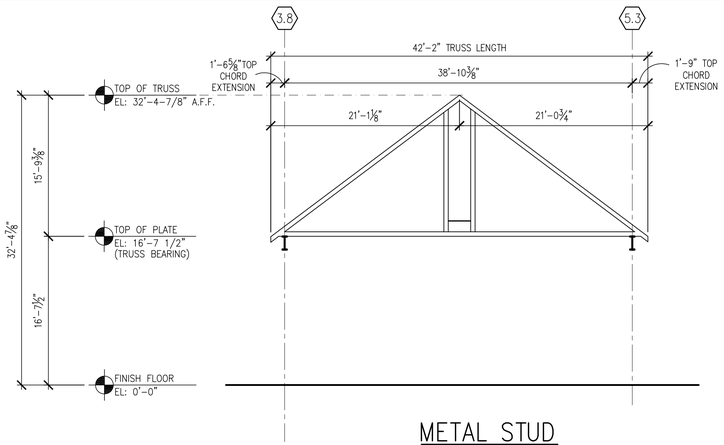

METAL STUD TRUSS TYPE #4

(LOCATION PLAN BELOW IS N.T.S.)

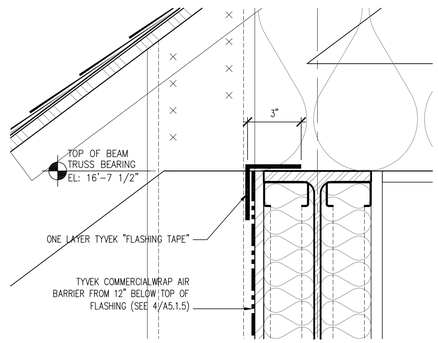

2 A-5.0 AIR BARRIER DETAIL

SCALE: 3" = 1'-0"

BKA Architects, Inc.
Architecture + Interiors

142 Crescent Street
Brockton, MA 02302

tel : 508.583.5603
fax : 508.584.2914
e-mail : bka@bkaarchs.com

CONSULTANT:

SEAL:

CVS/pharmacy

NEW

STORE NUMBER: 329

NORTHGATE PLAZA
91 AUBURN STREET
PORTLAND, MAINE

DEVELOPER:

A & D REALTY, LLC
5 MILITIA DRIVE
LEXINGTON, MA 02421

REVISIONS:

DRAWING BY:	RTK
DATE:	8/31/09
JOB NUMBER:	209017

TITLE:
TRUSS PROFILES
(SHEET ONE)

SHEET NUMBER:
A-5.0.1

COMMENTS:
ISSUED FOR CONSTRUCTION

Copyright © 2009 by BKA Architects, Inc. The architectural plans, drawings, specifications and other components, in hard copy and electronic form, are the property of BKA Architects, Inc. To avoid misuse and/or conflict, disclosure to others, or use in connection with any work or project other than the specified project for which they have been prepared and developed, without the express knowledge or written consent of BKA Architects, Inc.

P:\Retail_Proj\209017\CVS #329\Architectural\Sheets\209017_A50.dwg Sep 02, 2009 - 9:16 am RKUHN

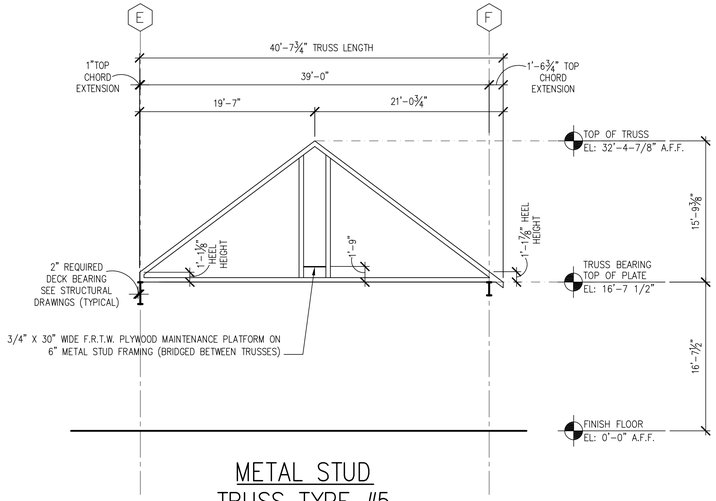

METAL STUD TRUSS TYPE #5

(LOCATION PLAN BELOW IS N.T.S.)

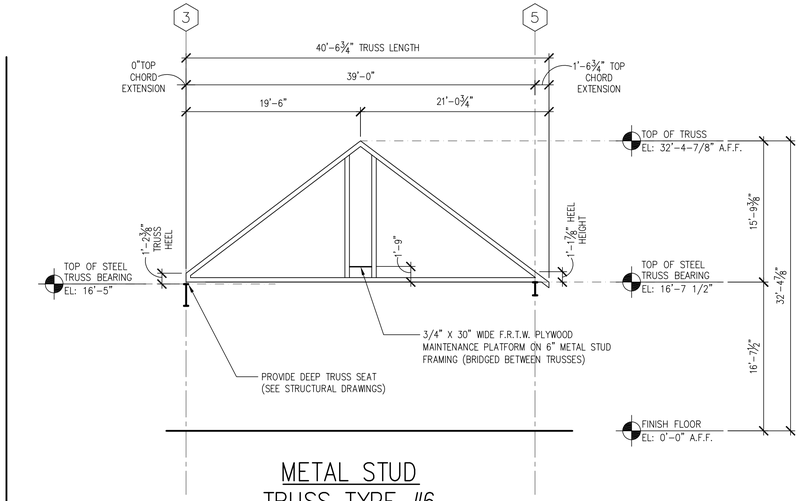

METAL STUD TRUSS TYPE #6

(LOCATION PLAN BELOW IS N.T.S.)

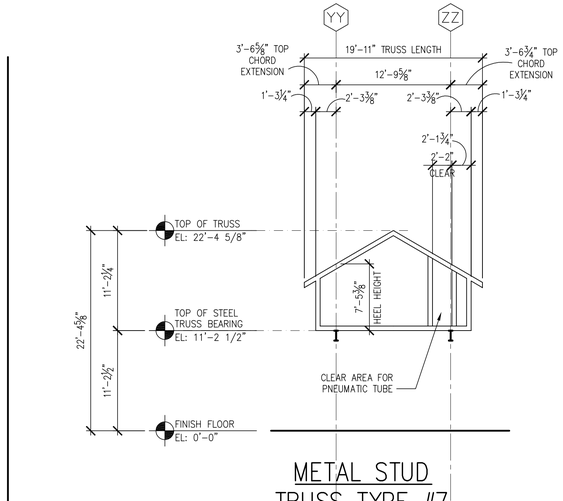

METAL STUD TRUSS TYPE #7

(LOCATION PLAN BELOW IS N.T.S.)

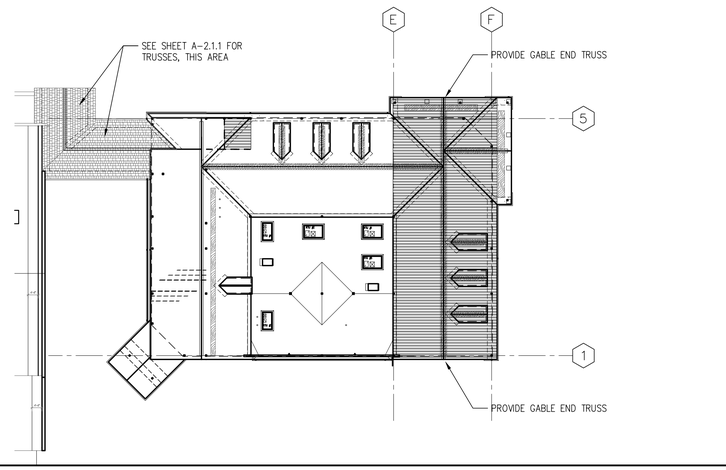

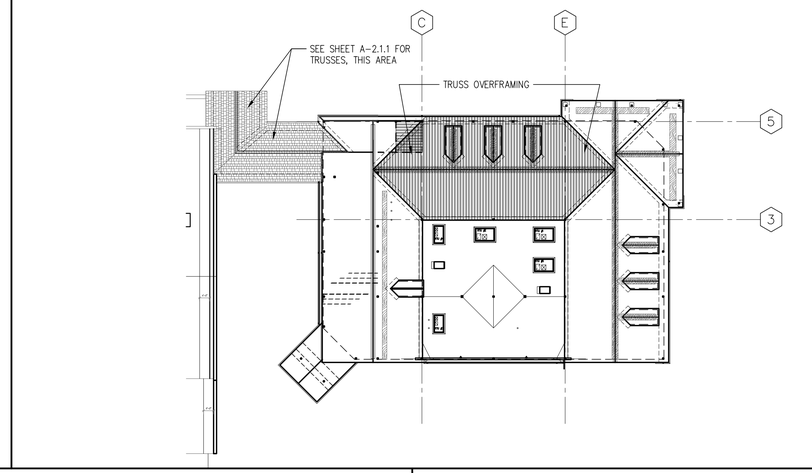

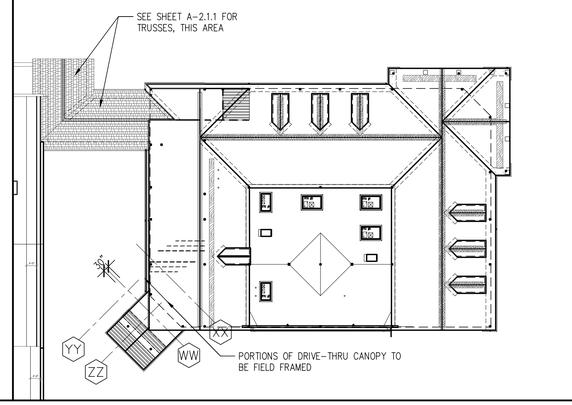

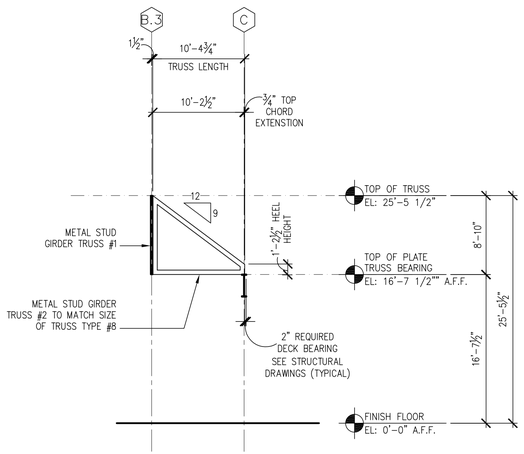

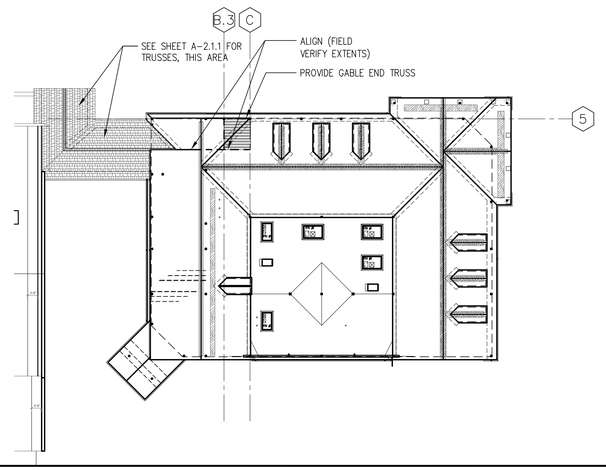

METAL STUD TRUSS TYPE #8

(LOCATION PLAN AT RIGHT IS N.T.S.)

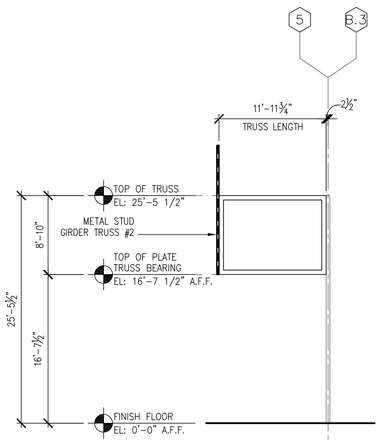

METAL STUD GIRDER TRUSS TYPE #1

(SEE ROOF PLAN FOR LOCAITON)

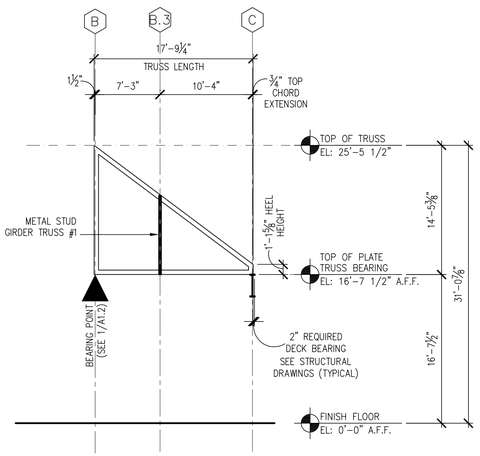

METAL STUD GIRDER TRUSS TYPE #2

(SEE ROOF PLAN FOR LOCAITON)

P:\Retail_Proj\209017\CVS #329\Architectural\Sheets\209017_A50.dwg Sep 02 , 2009 - 9:16 am RKUHN

BKA Architects, Inc.
Architecture + Interiors

142 Crescent Street
Brockton, MA 02302

tel : 508.583.5603
fax : 508.584.2914
e-mail : bka@bkaarchs.com

CONSULTANT:

SEAL:

CVS/ pharmacy

NEW

STORE NUMBER: 329

NORTHGATE PLAZA
91 AUBURN STREET
PORTLAND, MAINE

DEVELOPER:

A & D REALTY, LLC
5 MILITIA DRIVE
LEXINGTON, MA 02421

REVISIONS:

DRAWING BY:	RTK
DATE:	8/31/09
JOB NUMBER:	209017

TITLE:
TRUSS PROFILES (SHEET TWO)

SHEET NUMBER:
A-5.0.2

COMMENTS:
ISSUED FOR CONSTRUCTION

Copyright © 2009 by BKA Architects, Inc. The architectural plans, drawings, designs, specifications, and other components in this sheet are and shall remain the property of BKA Architects, Inc. They were prepared and developed, without the express knowledge and written consent of BKA Architects, Inc. in connection with the work of project, other than the specified project for which they have been prepared and developed.

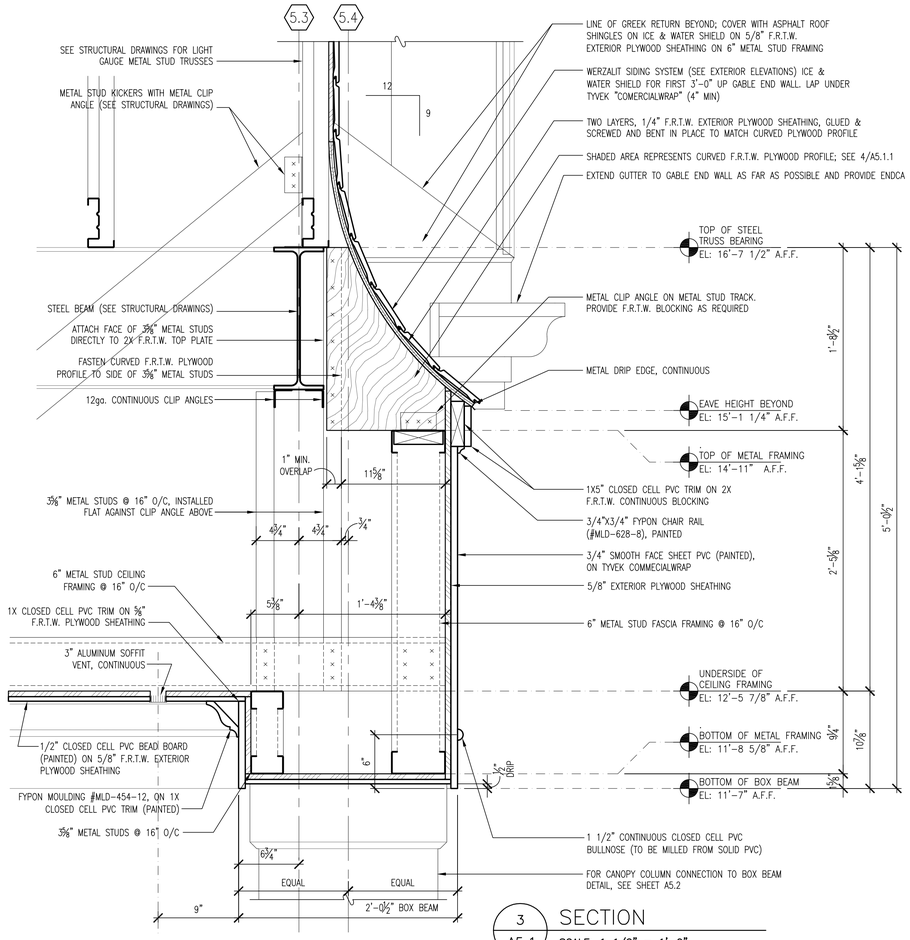

3 A5.1 SECTION
SCALE: 1 1/2" = 1'-0"

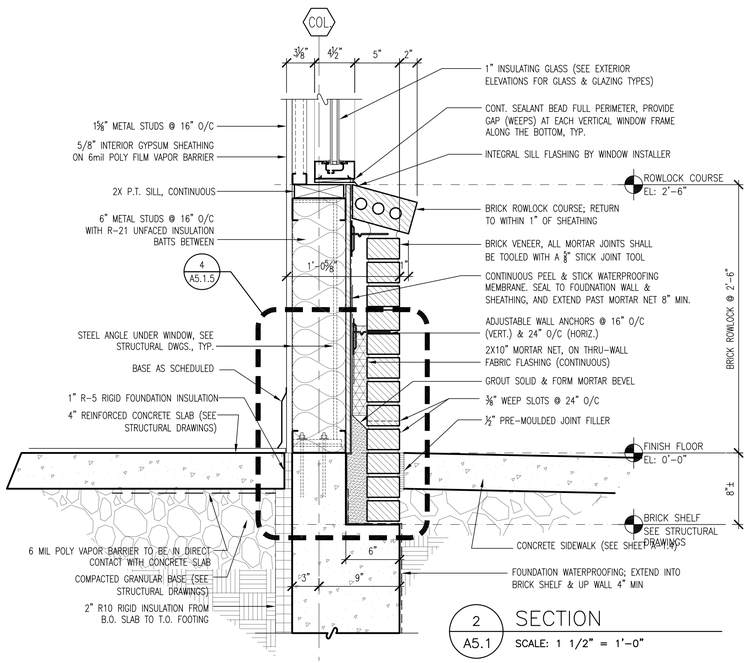

2 A5.1 SECTION
SCALE: 1 1/2" = 1'-0"

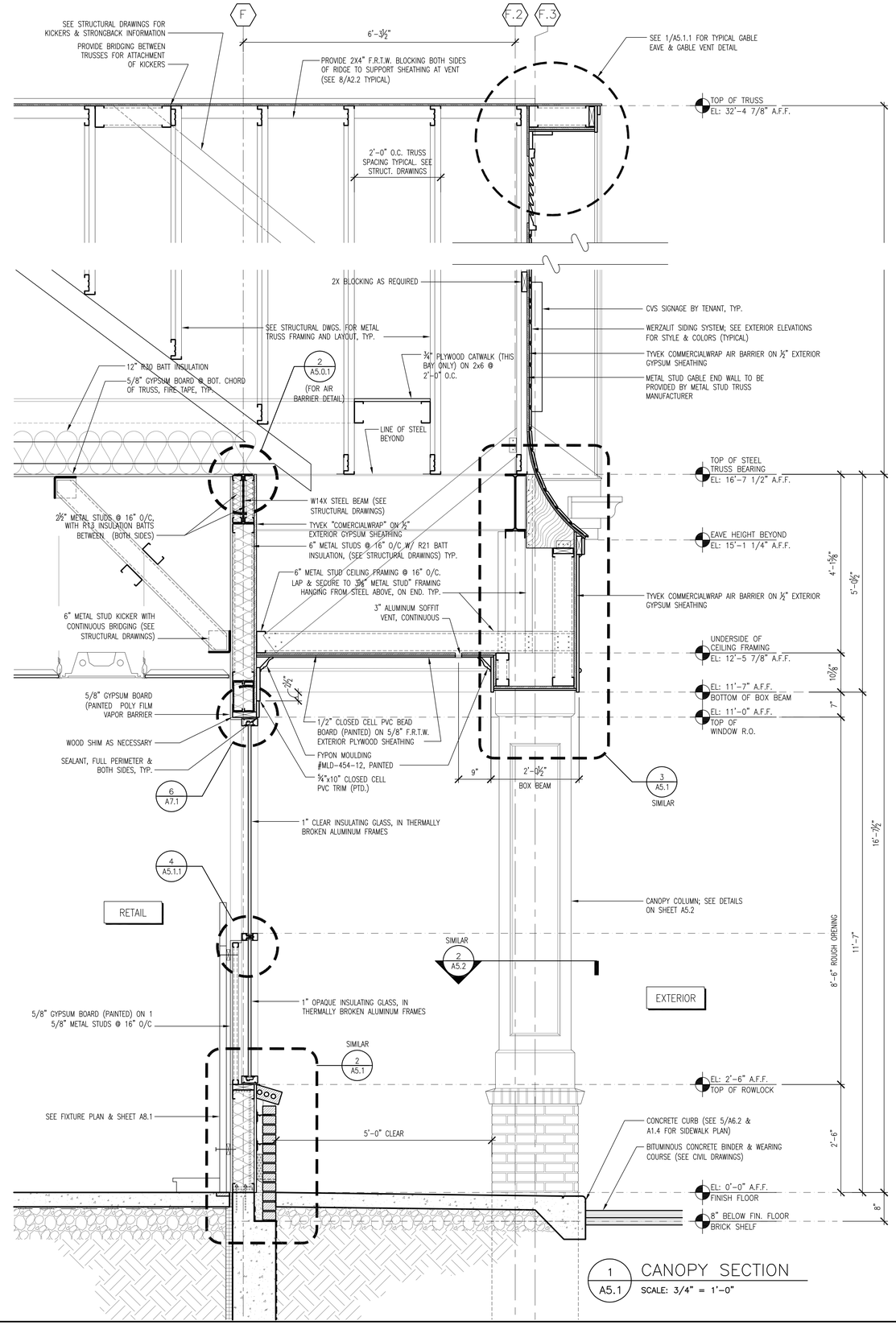

1 A5.1 CANOPY SECTION
SCALE: 3/4" = 1'-0"

P:\Retail_Proj\209017\CVS #329\Architectural\Sheets\209017_A5I& A5II.dwg Sep 02 , 2009 - 9:17 am RKUHN

BKA Architects, Inc.
Architecture + Interiors
142 Crescent Street
Brockton, MA 02302
tel : 508.583.5603
fax : 508.584.2914
e-mail : bka@bkaarchs.com

CONSULTANT:

SEAL:

CVS/pharmacy

NEW

STORE NUMBER: 329

NORTHGATE PLAZA
91 AUBURN STREET
PORTLAND, MAINE

DEVELOPER:

A & D REALTY, LLC
5 MILITIA DRIVE
LEXINGTON, MA 02421

REVISIONS:

DRAWING BY:	RTK
DATE:	8/31/09
JOB NUMBER:	209017

TITLE:
FRONT CANOPY SECTIONS

SHEET NUMBER:
A-5.1

COMMENTS:
ISSUED FOR CONSTRUCTION

Copyright © 2006 by BKA Architects, Inc. The architectural plans, drawings, specifications and other components in this sheet are and shall remain the property of BKA Architects, Inc. No part thereof shall be copied, disclosed to others, or used in connection with any work or project other than the specified project for which they have been prepared and developed, without the express knowledge and written consent of BKA Architects, Inc.

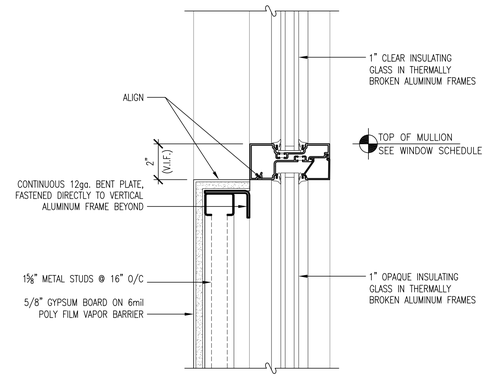

4 A5.1.1 TOP OF WALL DETAIL
SCALE: 3" = 1'-0"

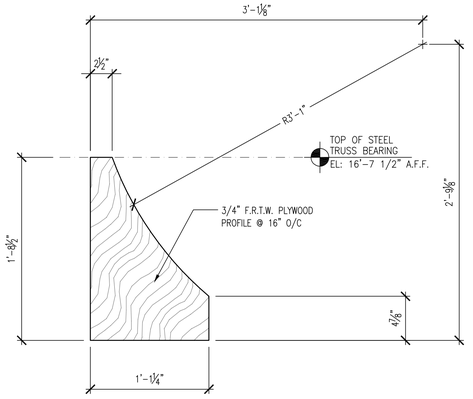

3 A5.1.1 CURVED PLYWOOD PROFILE
SCALE: 1 1/2" = 1'-0"

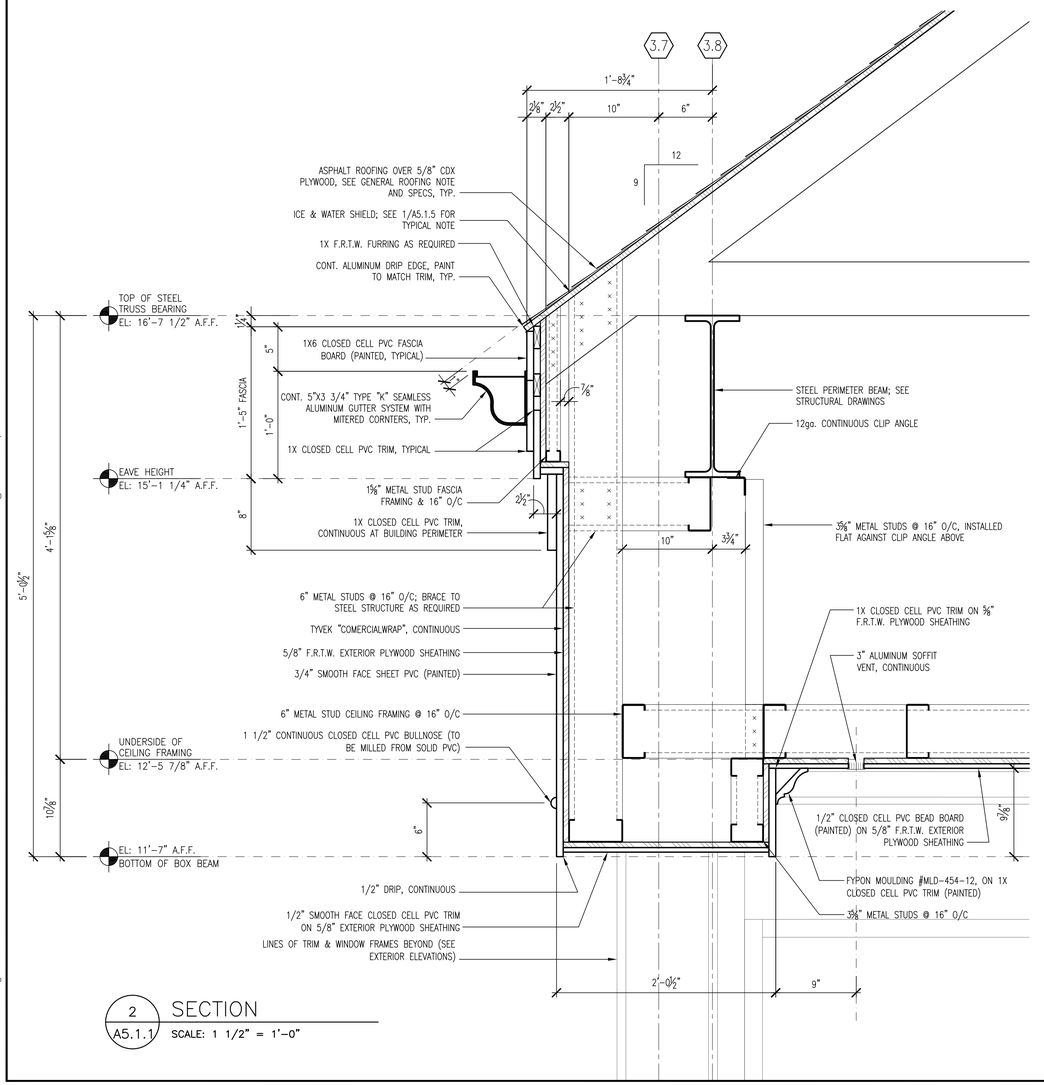

2 A5.1.1 SECTION
SCALE: 1 1/2" = 1'-0"

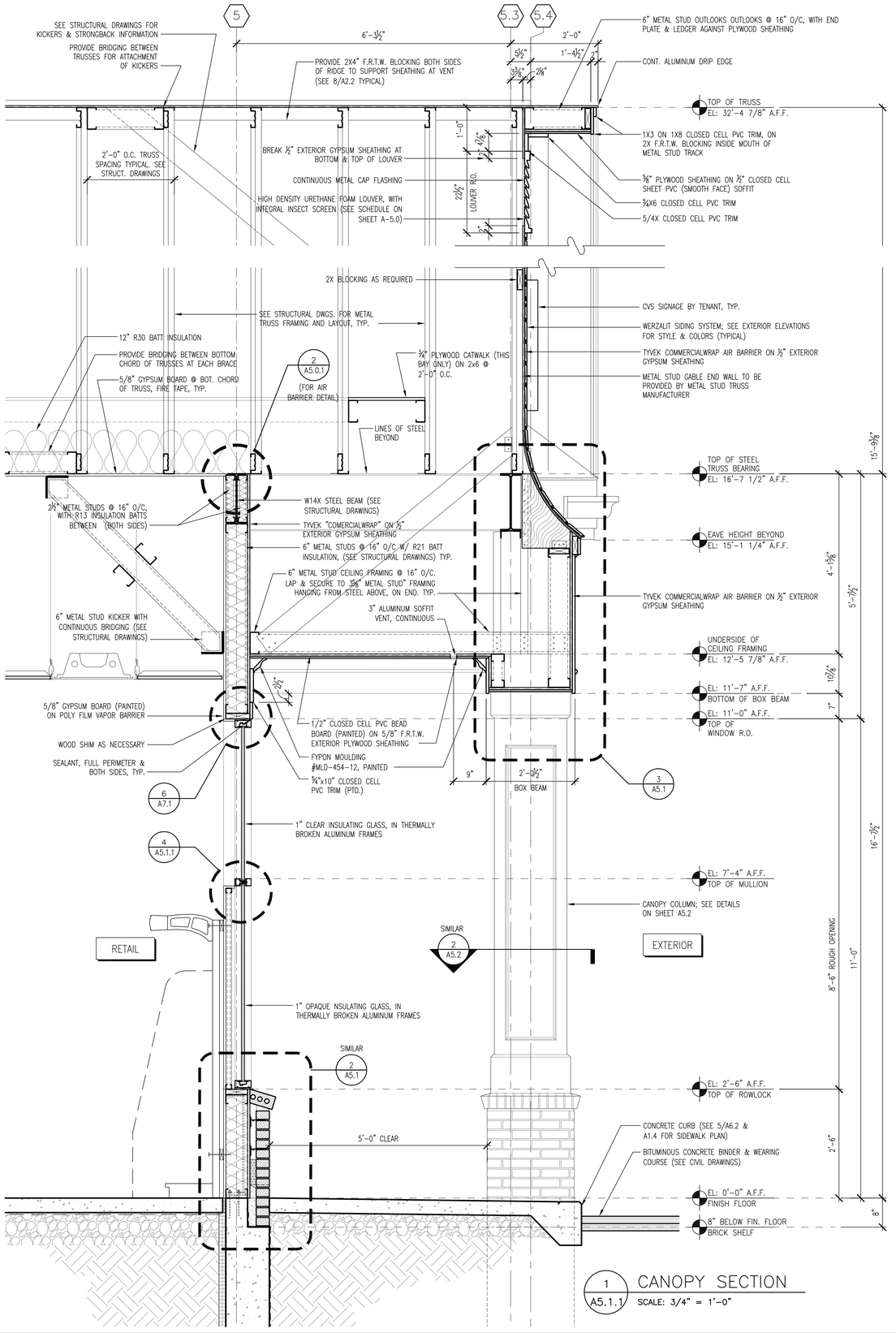

1 A5.1.1 CANOPY SECTION
SCALE: 3/4" = 1'-0"

P:\Retail_Proj\209017\CVS #329\Architectural\Sheets\209017_A51& A511.dwg Sep 02 , 2009 - 9:17 am RKUHN

BKA Architects, Inc.
Architecture + Interiors
142 Crescent Street
Brockton, MA 02302
tel : 508.583.5603
fax : 508.584.2914
e-mail : bka@bkaarchs.com

CONSULTANT:

SEAL:

CVS/pharmacy

NEW

STORE NUMBER: 329

NORTHGATE PLAZA
91 AUBURN STREET
PORTLAND, MAINE

DEVELOPER:

A & D REALTY, LLC
5 MILITIA DRIVE
LEXINGTON, MA 02421

REVISIONS:

DRAWING BY:	RTK
DATE:	8/31/09
JOB NUMBER:	209017

TITLE: CANOPY SECTION

SHEET NUMBER: A5.1.1

COMMENTS: ISSUED FOR CONSTRUCTION

Copyright © 2006 by BKA Architects, Inc. The architectural plans, drawings, designs, specifications and other embodiments of this sheet are and shall remain the property of BKA Architects, Inc. No part thereof shall be copied, disclosed to others, or used in connection with any work or project, other than the specified project for which they have been prepared and delivered, without the express knowledge and written consent of BKA Architects, Inc.

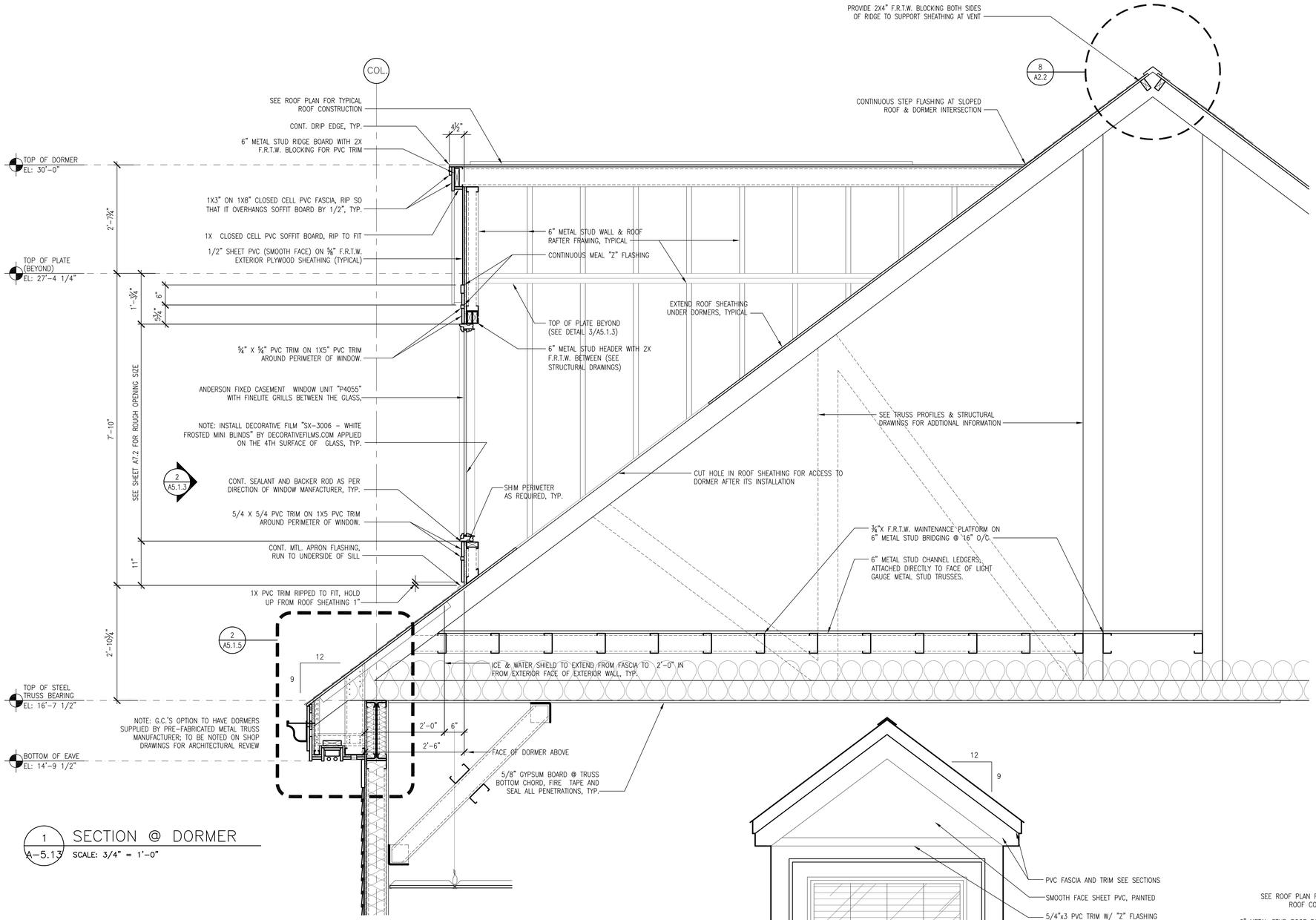

1 A-5.1.3 SECTION @ DORMER
SCALE: 3/4" = 1'-0"

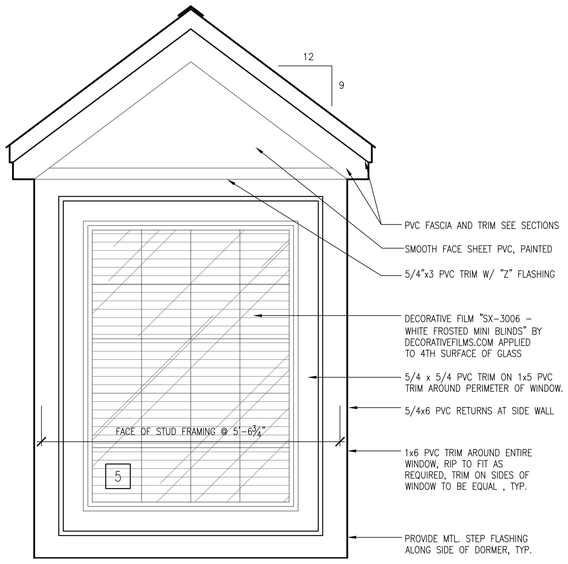

2 A-5.1.3 DORMER ELEVATION
SCALE: 3/4" = 1'-0"

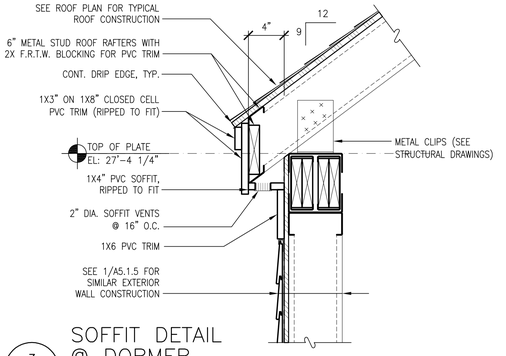

3 A-5.1.3 SOFFIT DETAIL @ DORMER
SCALE: 1 1/2" = 1'-0"

BKA Architects, Inc.
Architecture + Interiors
142 Crescent Street
Brockton, MA 02302
tel : 508.583.5603
fax : 508.584.2914
e-mail : bka@bkaarchs.com

CONSULTANT:

SEAL:

CVS/pharmacy

NEW

STORE NUMBER: 329

NORTHGATE PLAZA
91 AUBURN STREET
PORTLAND, MAINE

DEVELOPER:

A & D REALTY, LLC
5 MILITIA DRIVE
LEXINGTON, MA 02421

REVISIONS:

DRAWING BY:	RTK
DATE:	8/31/09
JOB NUMBER:	209017

TITLE: DORMER ELEVATION, SECTION & DETAILS

SHEET NUMBER: A-5.1.3

COMMENTS: ISSUED FOR CONSTRUCTION

Copyright © 2006 by BKA Architects, Inc. The architectural plans, drawings, designs, specifications and other assignments on this sheet are and shall remain the property of BKA Architects, Inc. No part thereof shall be copied, disclosed to others, or used in connection with any work or project, other than the specified project for which they have been prepared and developed, without the express knowledge and written consent of BKA Architects, Inc.

P:\Retail_Proj\209017\CVS #329\Architectural\Sheets\209017_A513.dwg Sep 02 , 2009 - 9:18 am RKUHN

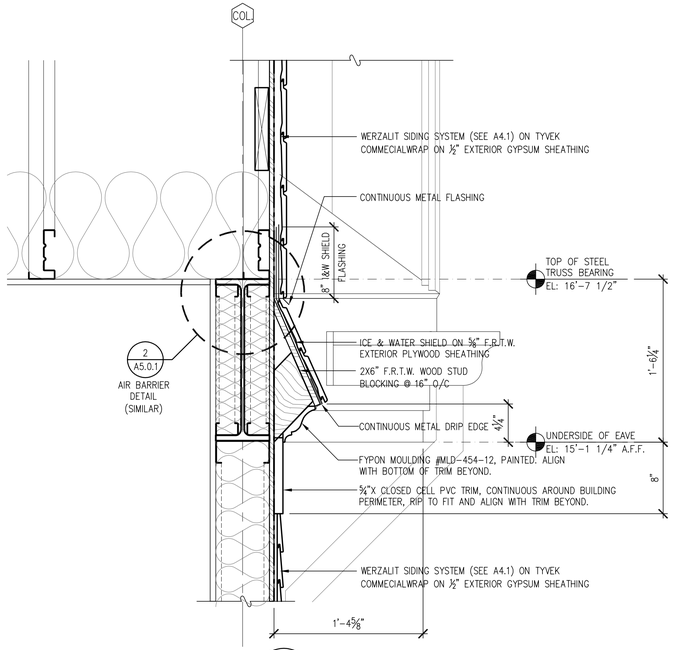

4 A5.1.4 DETAIL
SCALE: 1 1/2" = 1'-0"

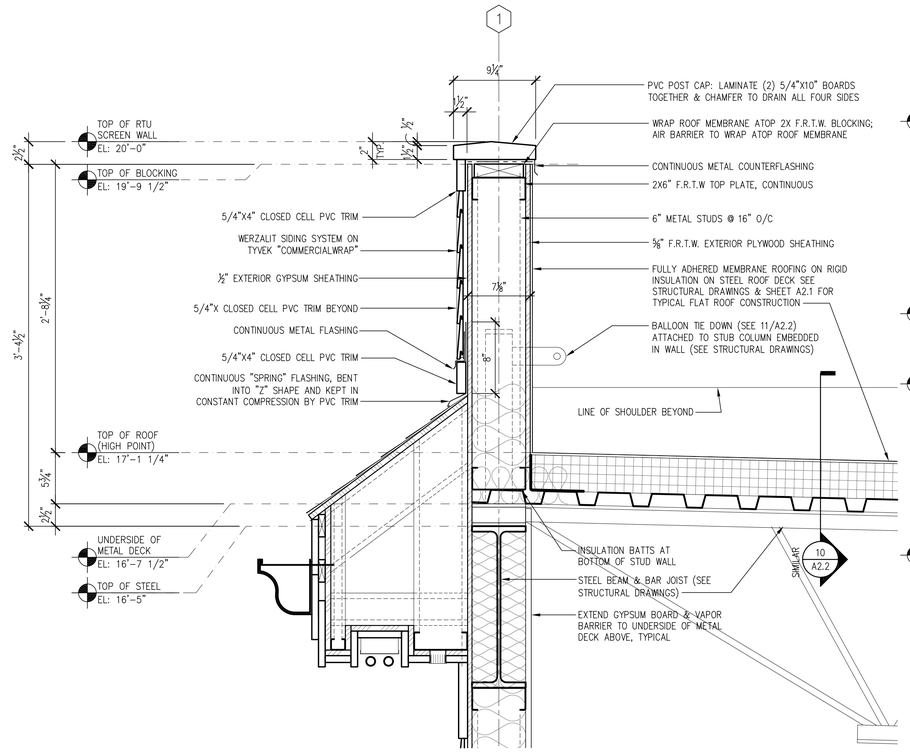

2 A5.1.4 R.T.U. SCREEN DETAIL
SCALE: 1 1/2" = 1'-0"

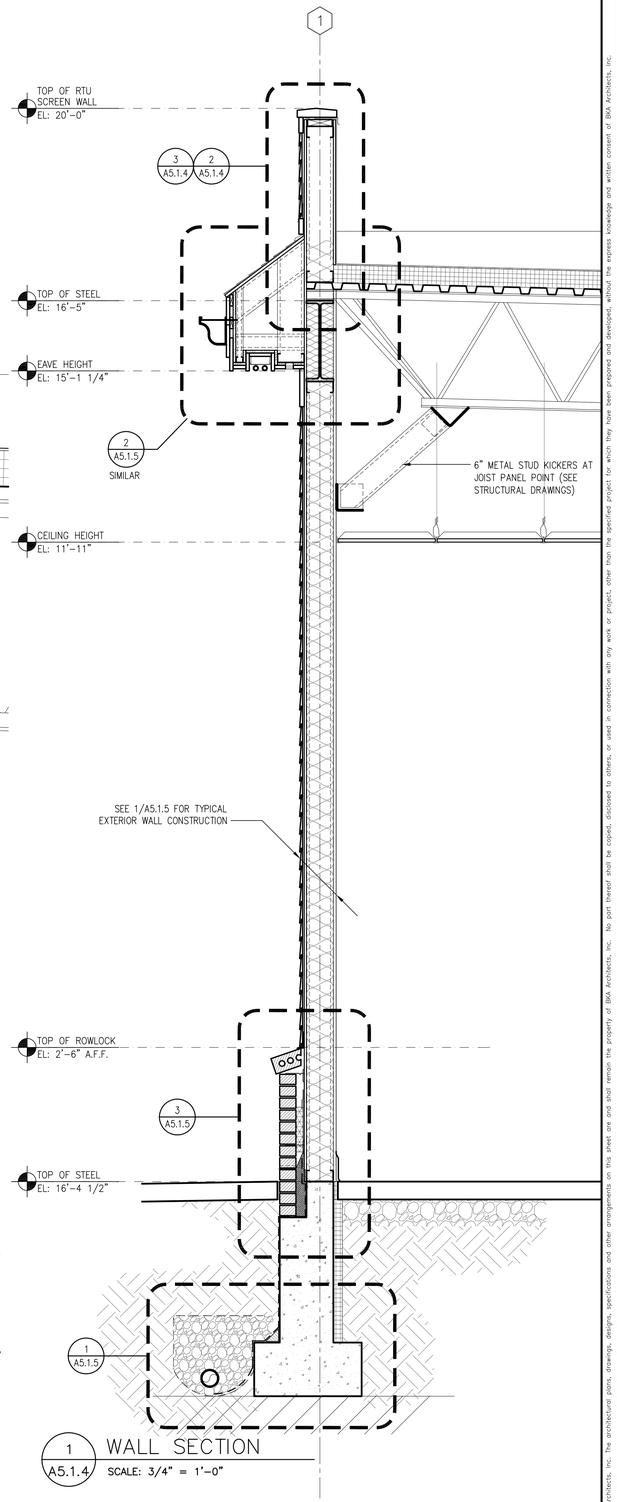

1 A5.1.4 WALL SECTION
SCALE: 3/4" = 1'-0"

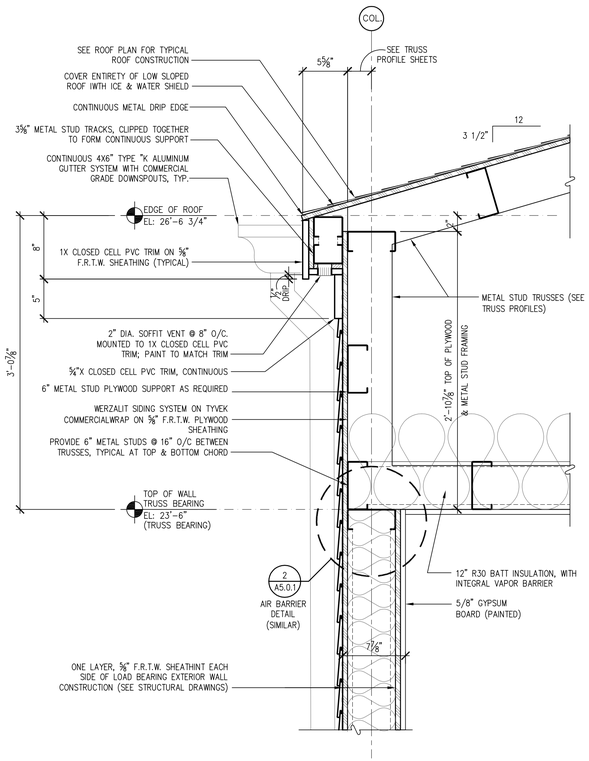

5 A5.1.4 DETAIL
SCALE: 1 1/2" = 1'-0"

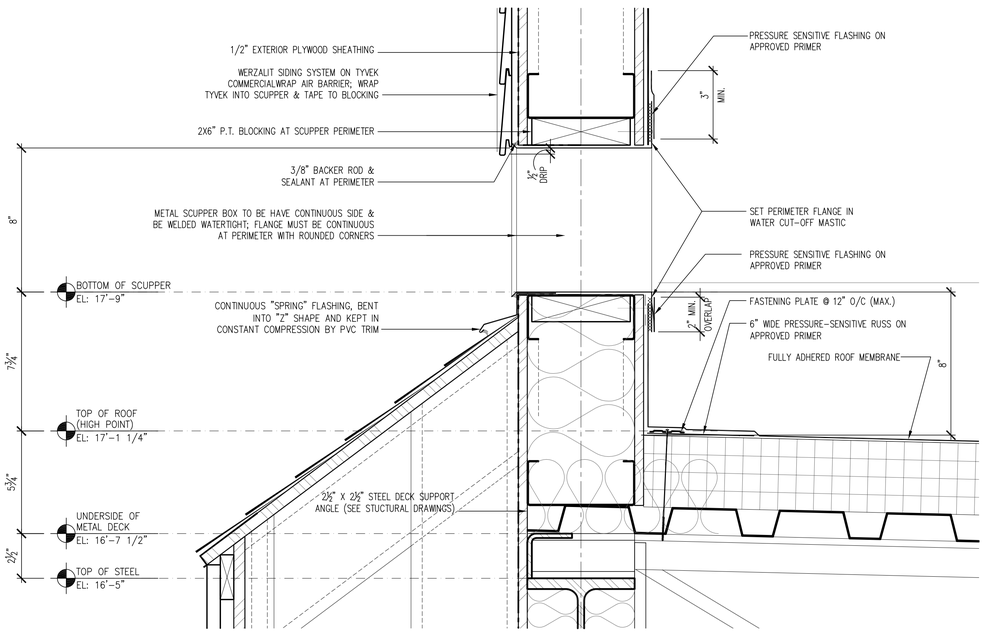

3 A5.1.4 SCUPPER DETAIL
SCALE: 1 1/2" = 1'-0"

BKA Architects, Inc.
Architecture + Interiors
142 Crescent Street
Brockton, MA 02302
tel : 508.583.5603
fax : 508.584.2914
e-mail : bka@bkaarchs.com

CONSULTANT:

SEAL:

CVS/pharmacy

NEW

STORE NUMBER: 329

NORTHGATE PLAZA
91 AUBURN STREET
PORTLAND, MAINE

DEVELOPER:

A & D REALTY, LLC
5 MILITIA DRIVE
LEXINGTON, MA 02421

REVISIONS:

DRAWING BY:	RTK
DATE:	8/31/09
JOB NUMBER:	209017

TITLE: WALL SECTION

SHEET NUMBER: A-5.1.4

COMMENTS: ISSUED FOR CONSTRUCTION

Copyright © 2009 by BKA Architects, Inc. The architectural plans, drawings, specifications and other arrangements on this sheet are and shall remain the property of BKA Architects, Inc. No part thereof shall be copied, disclosed to others, or used in connection with any work or project, other than the specified project for which they have been prepared and delivered, without the express knowledge and written consent of BKA Architects, Inc.

P:\Retail_Proj\209017\CVS #329\Architectural\Sheets\209017_A514.dwg Sep 02 , 2009 - 9:19 am RKUHN

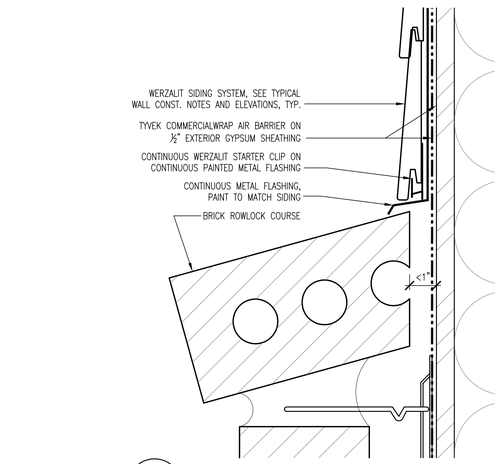

5 A5.1.5 FLASHING DETAIL
SCALE: 3" = 1'-0"

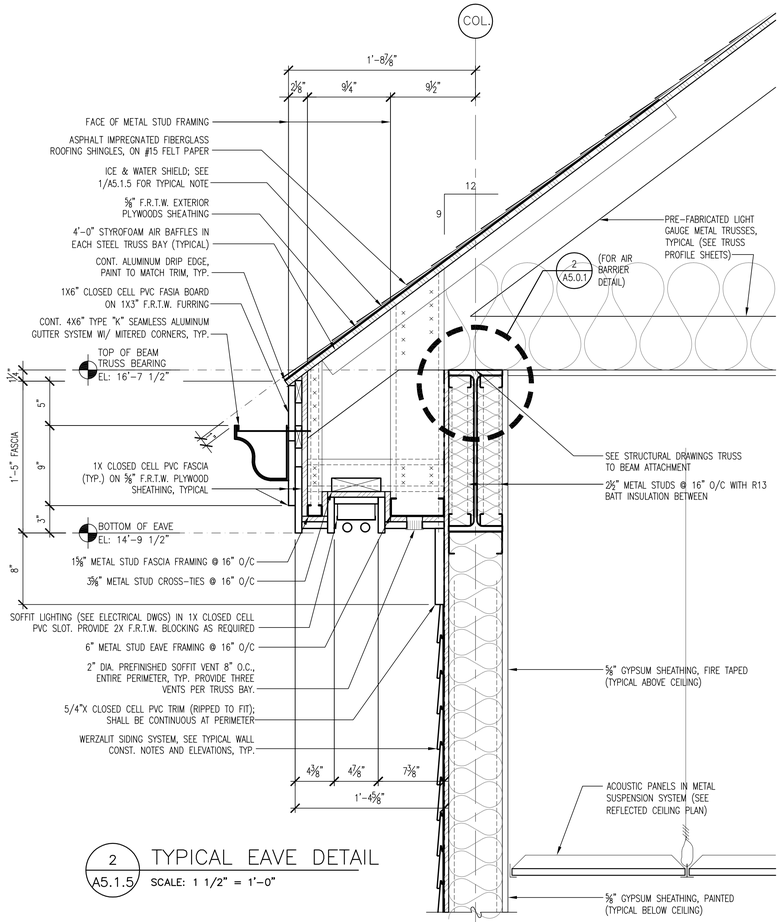

2 A5.1.5 TYPICAL EAVE DETAIL
SCALE: 1 1/2" = 1'-0"

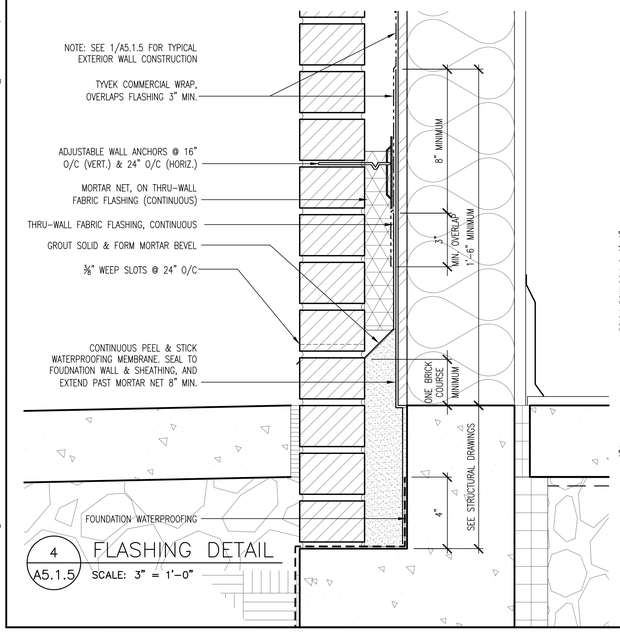

4 A5.1.5 FLASHING DETAIL
SCALE: 3" = 1'-0"

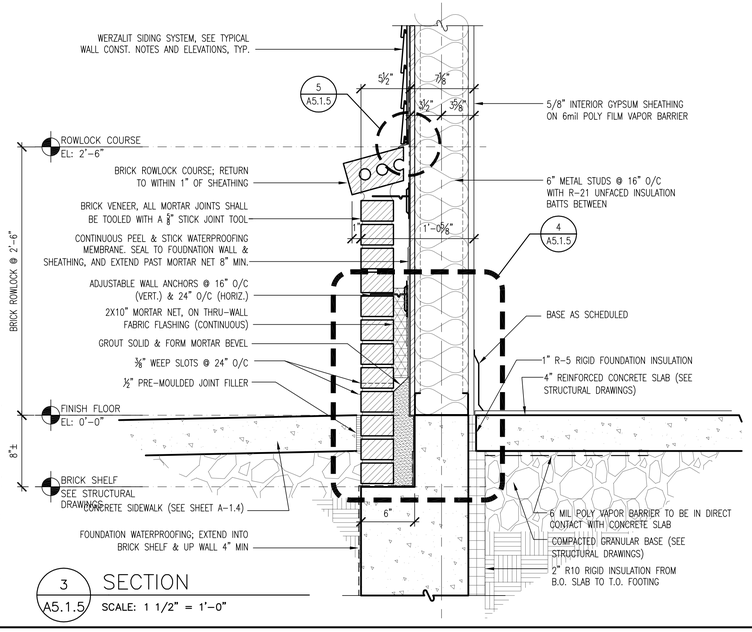

3 A5.1.5 SECTION
SCALE: 1 1/2" = 1'-0"

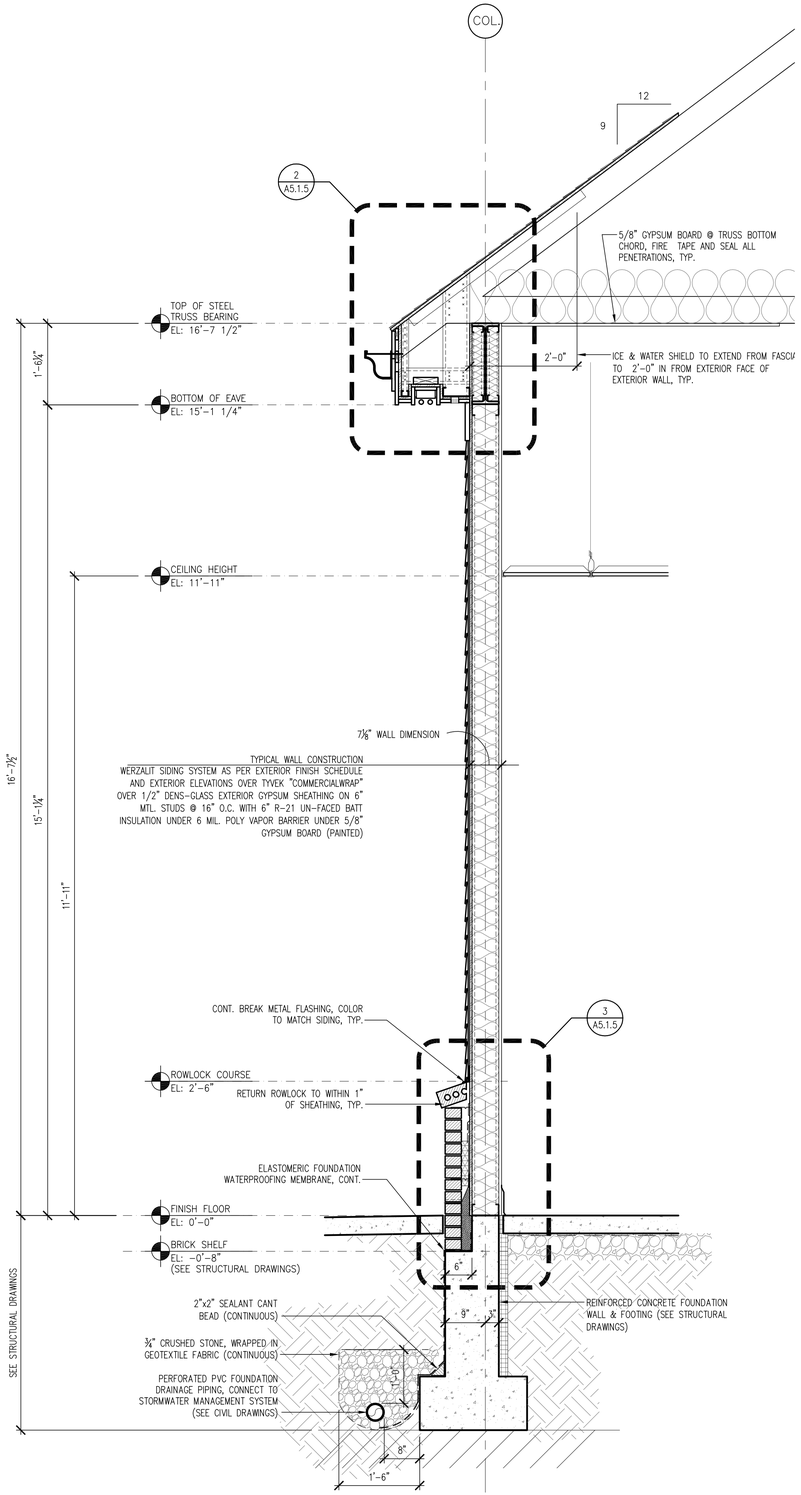

1 A-5.1.5 TYPICAL WALL SECTION
SCALE: 3/4" = 1'-0"

BKA Architects, Inc.
Architecture + Interiors
142 Crescent Street
Brockton, MA 02302
tel : 508.583.5603
fax : 508.584.2914
e-mail : bka@bkaarchs.com

CONSULTANT:

SEAL:

CVS/pharmacy

NEW

STORE NUMBER: 329

NORTHGATE PLAZA
91 AUBURN STREET
PORTLAND, MAINE

DEVELOPER:

A & D REALTY, LLC
5 MILITIA DRIVE
LEXINGTON, MA 02421

REVISIONS:

DRAWING BY:	RTK
DATE:	8/31/09
JOB NUMBER:	209017

TITLE:
TYPICAL WALL SECTION & DETAILS

SHEET NUMBER:
A-5.1.5

COMMENTS:
ISSUED FOR CONSTRUCTION

Copyright © 2009 by BKA Architects, Inc. The architectural plans, drawings, diagrams, specifications and other arrangements on this sheet are and shall remain the property of BKA Architects, Inc. No part thereof shall be copied, disclosed to others, or used in connection with any work or project, other than the specified project for which they have been prepared and delivered, without the express knowledge and written consent of BKA Architects, Inc.

P:\Retail_Proj\209017\CVS #329\Architectural\Sheets\209017_A515.dwg Sep 02 , 2009 - 9:19 am RKUHN

P:\Retail_Proj\209017\CVS #329\Architectural\Sheets\209017_A516.dwg Sep 02, 2009 - 9:20 am RKUHN

Copyright ©2006 by BKA Architects, Inc. The architectural plans, drawings, designs, specifications and other components on this sheet are and shall remain the property of BKA Architects, Inc. No part thereof shall be copied, disclosed to others, or used in connection with any work or project other than the specified project for which they have been prepared and developed without the express knowledge and written consent of BKA Architects, Inc.

COMMENTS:
ISSUED FOR CONSTRUCTION

SHEET NUMBER:
A-5.1.6

TITLE:
WALL SECTIONS

JOB NUMBER:	209017
DATE:	8/31/09
DRAWING BY:	RTK

REVISIONS:

DEVELOPER:
A & D REALTY, LLC
5 MILLTIA DRIVE
LEXINGTON, MA 02421

CVS/pharmacy
NEW
STORE NUMBER: 329
NORTHGATE PLAZA
91 AUBURN STREET
PORTLAND, MAINE

SEAL:

CONSULTANT:

BKA Architects, Inc.
Architecture + Interiors
142 Crescent Street
Brockton, MA 02302
tel : 508.583.5603
fax : 508.584.2914
e-mail : bka@bkaarchs.com

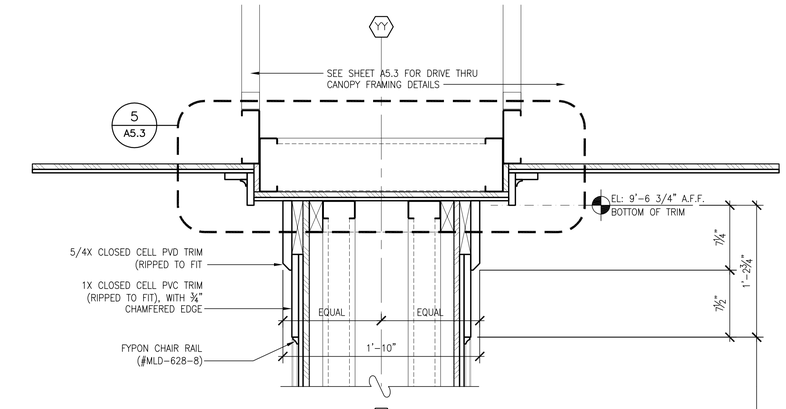

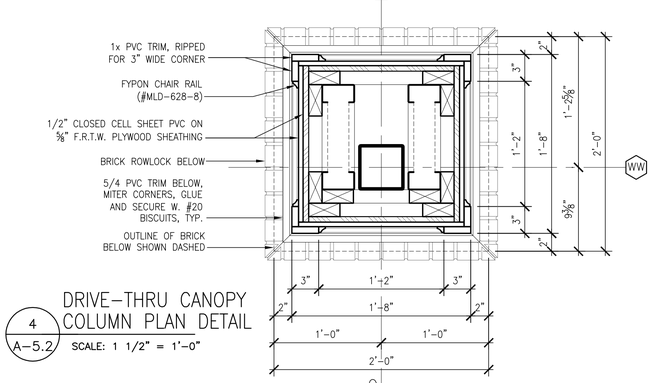

4 A-5.2 DRIVE-THRU CANOPY COLUMN PLAN DETAIL

SCALE: 1 1/2" = 1'-0"

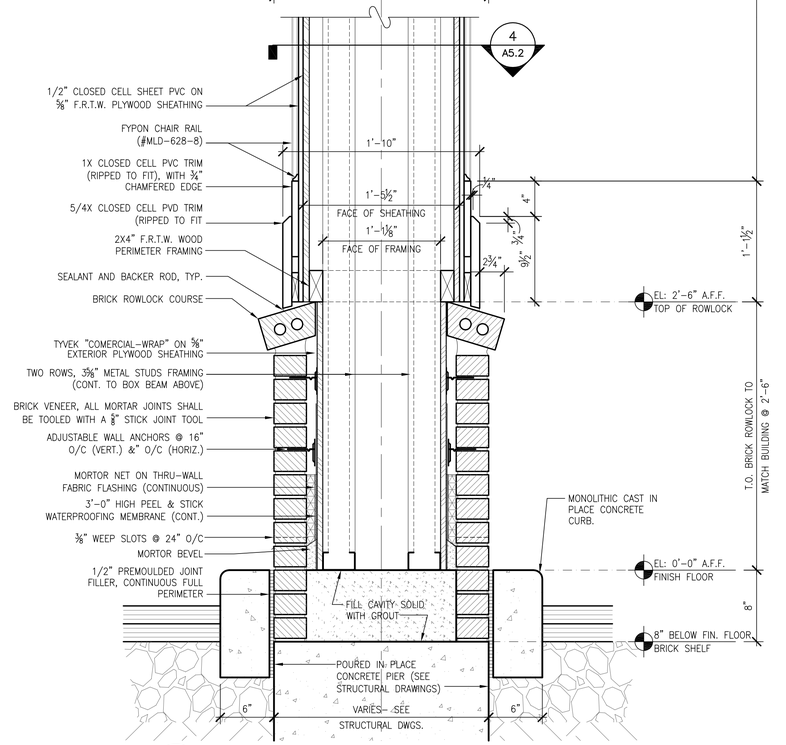

3 A-5.2 DRIVE-THRU COLUMN SECTION

SCALE: 1 1/2" = 1'-0"

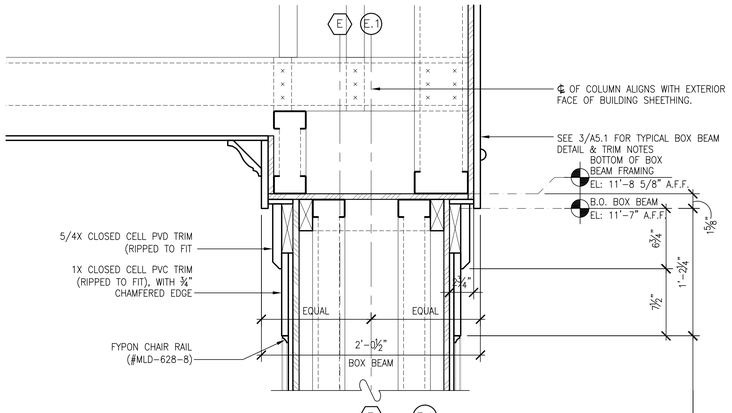

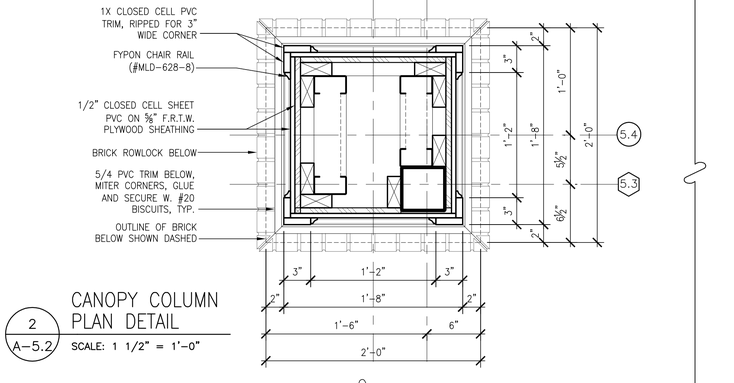

2 A-5.2 CANOPY COLUMN PLAN DETAIL

SCALE: 1 1/2" = 1'-0"

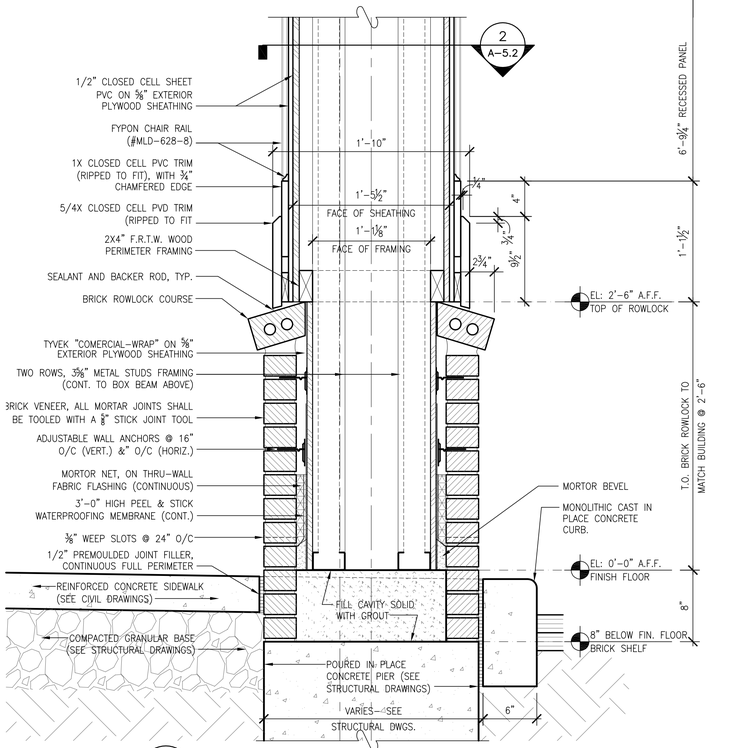

1 A-5.2 CANOPY COLUMN SECTION

SCALE: 1 1/2" = 1'-0"

BKA Architects, Inc.
Architecture + Interiors

142 Crescent Street
Brockton, MA 02302

tel : 508.583.5603
fax : 508.584.2914
e-mail : bka@bkaarchs.com

CONSULTANT:

SEAL:

CVS/pharmacy

NEW

STORE NUMBER: 329

NORTHGATE PLAZA
91 AUBURN STREET
PORTLAND, MAINE

DEVELOPER:

A & D REALTY, LLC
5 MILITIA DRIVE
LEXINGTON, MA 02421

REVISIONS:

DRAWING BY:	RTK
DATE:	8/31/09
JOB NUMBER:	209017

TITLE: COLUMN SECTIONS AND DETAILS

SHEET NUMBER: A-5.2

COMMENTS:
ISSUED FOR CONSTRUCTION

Copyright © 2009 by BKA Architects, Inc. The architectural plans, drawings, sketches, specifications and other arrangements on this sheet are and shall remain the property of BKA Architects, Inc. No part thereof shall be copied, disclosed to others, or used in connection with any work or project, other than the specified project for which they have been prepared and delivered, without the express knowledge and written consent of BKA Architects, Inc.

P:\Retail_Proj\209017\CVS #329\Architectural\Sheets\209017_A52.dwg Sep 02 , 2009 - 9:20 am RKUHN

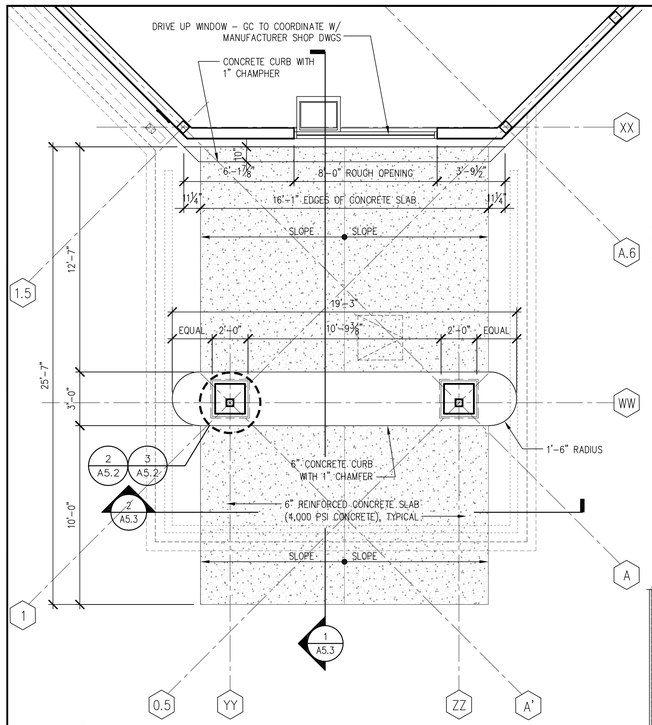

3 A5.3 ENLARGED DRIVE-THRU PLAN
SCALE: 1/2" = 1'-0"

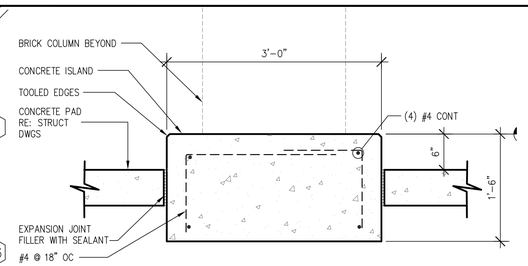

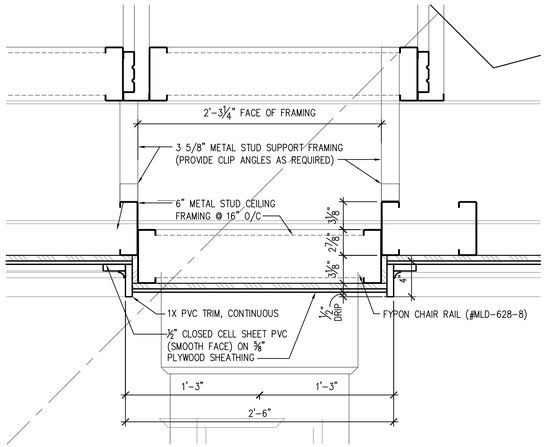

5 A5.3 PILASTER DETAIL
SCALE: 1 1/2" = 1'-0"

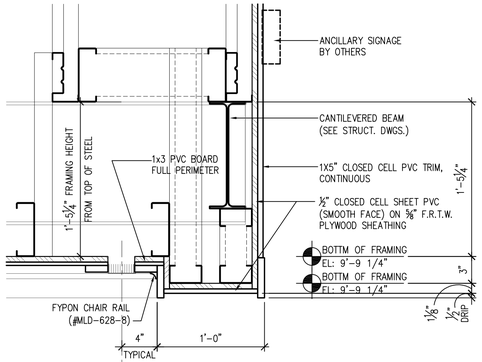

6 A5.3 PILASTER DETAIL
SCALE: 1 1/2" = 1'-0"

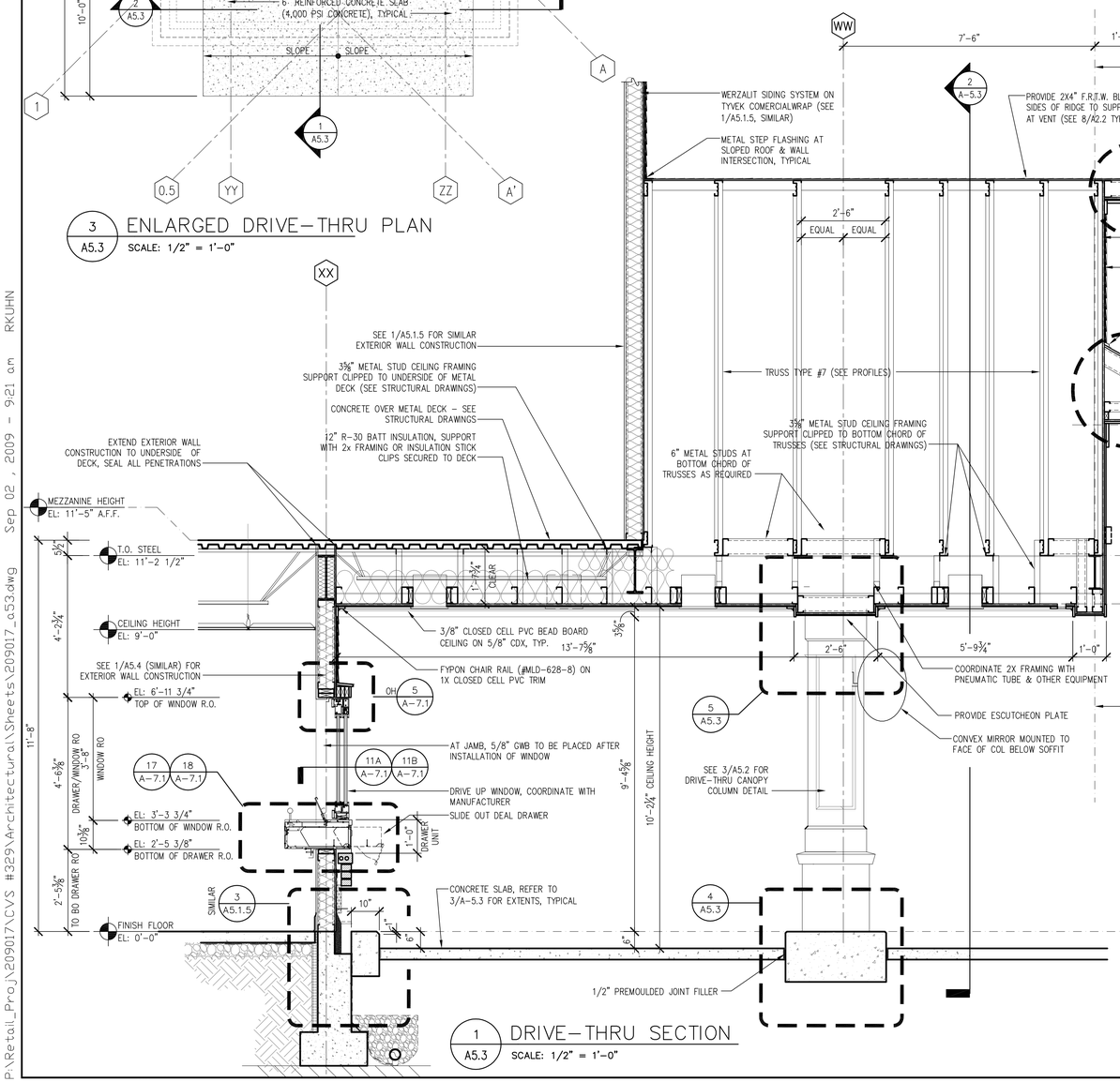

1 A5.3 DRIVE-THRU SECTION
SCALE: 1/2" = 1'-0"

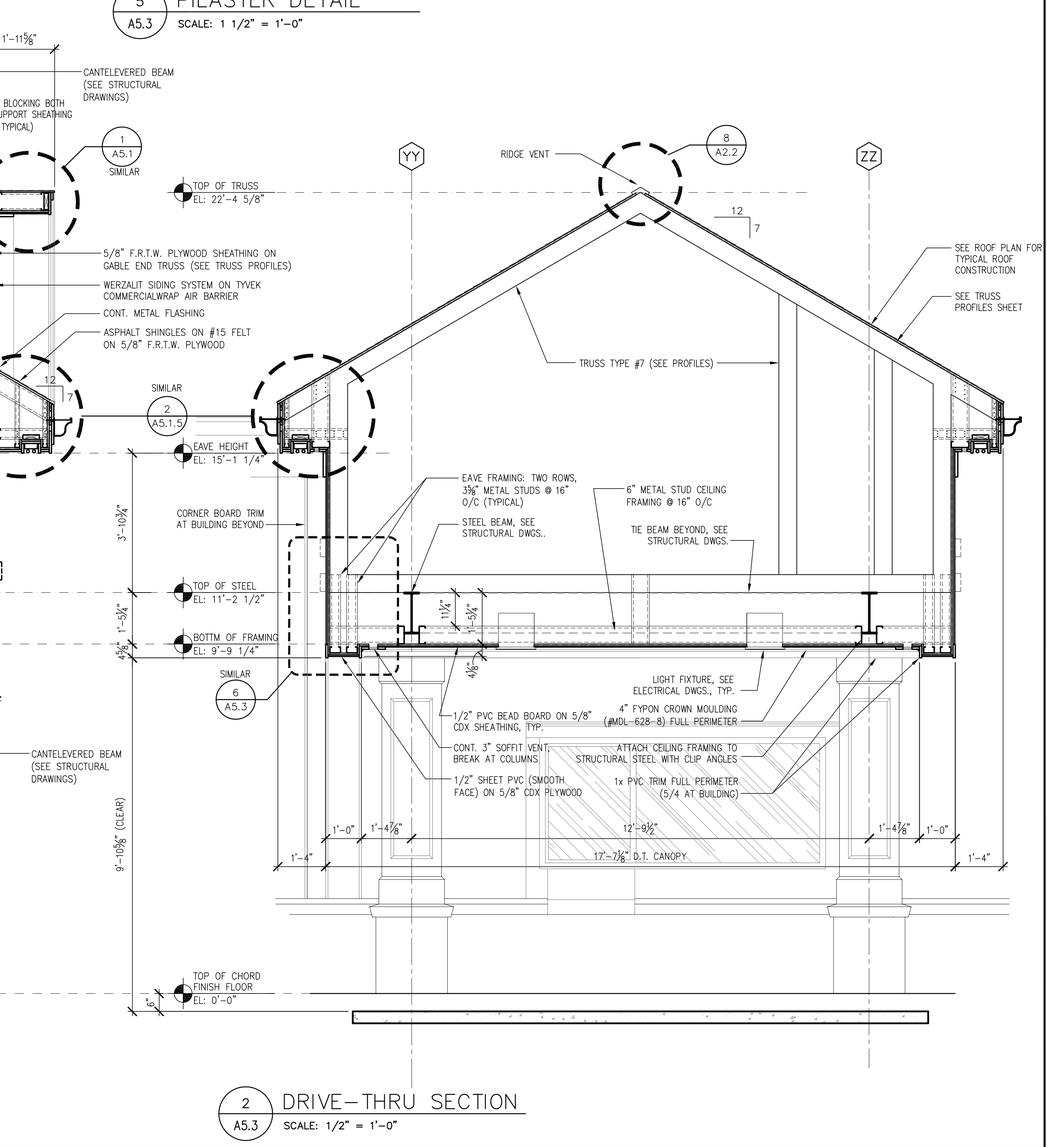

2 A5.3 DRIVE-THRU SECTION
SCALE: 1/2" = 1'-0"

P:\Retail_Proj\209017\CVS #329\Architectural\Sheets\209017_a53.dwg Sep 02 , 2009 - 9:21 am RKUHN

BKA Architects, Inc.
Architecture + Interiors
142 Crescent Street
Brockton, MA 02302
tel : 508.583.5603
fax : 508.584.2914
e-mail : bka@bkaarchs.com

CONSULTANT:

SEAL:

CVS/pharmacy

NEW

STORE NUMBER: 329

NORTHGATE PLAZA
91 AUBURN STREET
PORTLAND, MAINE

DEVELOPER:

A & D REALTY, LLC
5 MILITIA DRIVE
LEXINGTON, MA 02421

REVISIONS:

DRAWING BY:	RTK
DATE:	8/31/09
JOB NUMBER:	209017

TITLE: DRIVE-THRU PLAN, SECTIONS, & DETAILS

SHEET NUMBER: A-5.3

COMMENTS:
ISSUED FOR CONSTRUCTION

Copyright © 2006 by BKA Architects, Inc. The architectural plans, drawings, designs, specifications and other arrangements on this sheet are and shall remain the property of BKA Architects, Inc. No part thereof shall be copied, disclosed to others, or used in connection with any work or project, other than the specified project for which they have been prepared and delivered, without the express knowledge and written consent of BKA Architects, Inc.

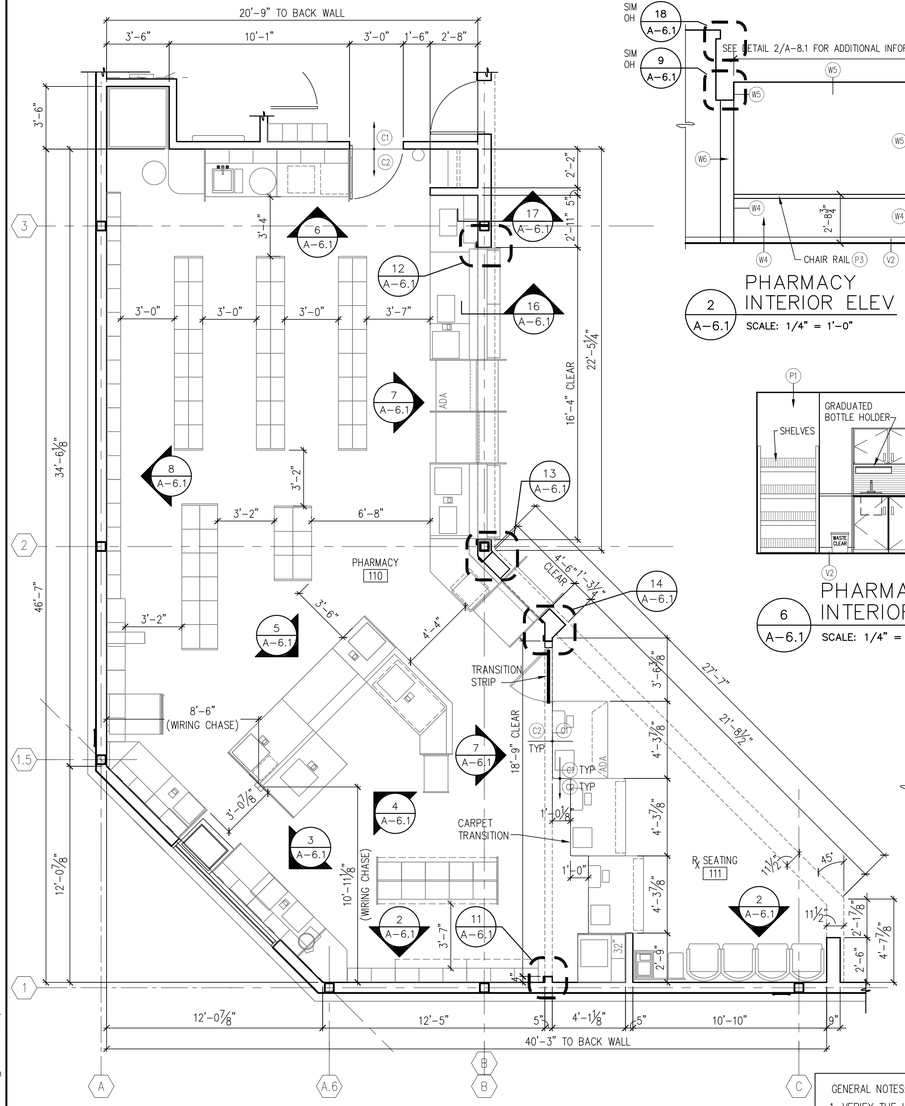

1 A-6.1 PHARMACY PLAN
SCALE: 1/4" = 1'-0"

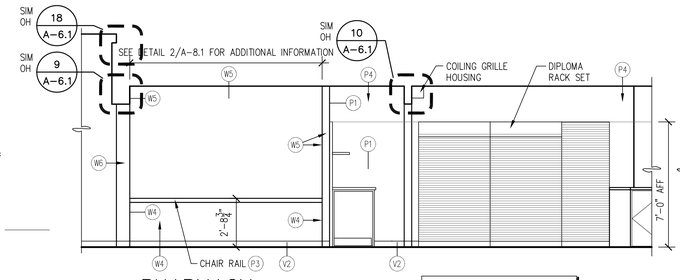

2 A-6.1 PHARMACY INTERIOR ELEV
SCALE: 1/4" = 1'-0"

POWER REQUIREMENTS FOR WALL PANELS COORDINATE WITH SHEET E-1.4

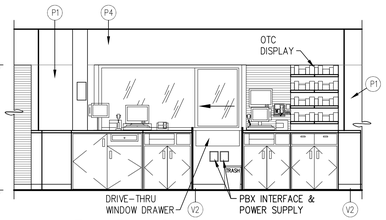

3 A-6.1 PHARMACY INTERIOR ELEV
SCALE: 1/4" = 1'-0"

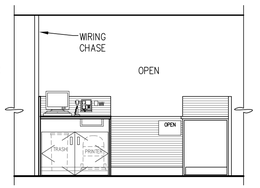

4 A-6.1 PHARMACY INTERIOR ELEV
SCALE: 1/4" = 1'-0"

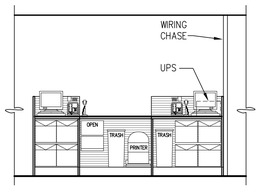

5 A-6.1 PHARMACY INTERIOR ELEV
SCALE: 1/4" = 1'-0"

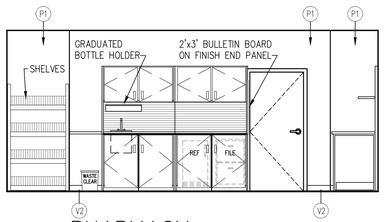

6 A-6.1 PHARMACY INTERIOR ELEV
SCALE: 1/4" = 1'-0"

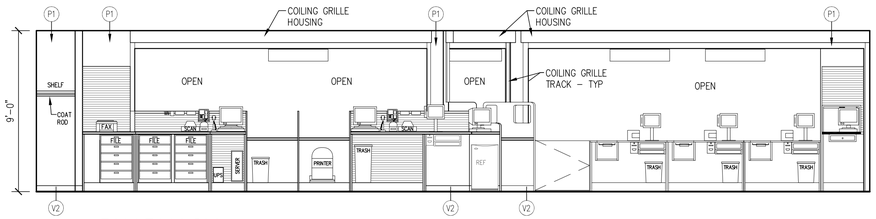

7 A-6.1 PHARMACY INTERIOR ELEV
SCALE: 1/4" = 1'-0"

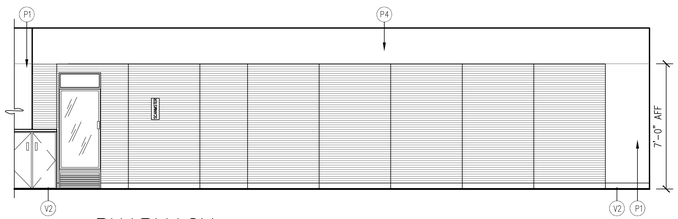

8 A-6.1 PHARMACY INTERIOR ELEV
SCALE: 1/4" = 1'-0"

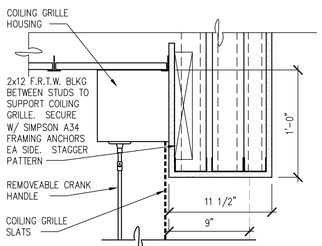

9 A-6.1 HEAD DETAIL
SCALE: 1 1/2" = 1'-0"

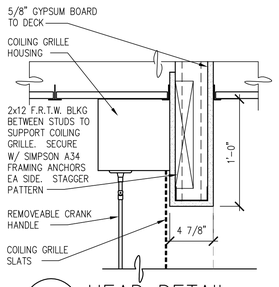

10 A-6.1 HEAD DETAIL
SCALE: 1 1/2" = 1'-0"

GENERAL NOTES:
1. VERIFY THE UNDERCABINET LOCATIONS W/ DWG F-1
2. REFER TO DETAIL 1/A-1.1 FOR PARTITION TYPES.

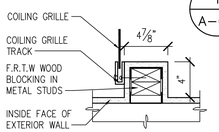

11 A-6.1 COILING GRILLE JAMB DETAIL
SCALE: 1 1/2" = 1'-0"

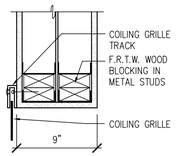

12 A-6.1 COILING GRILLE JAMB DETAIL
SCALE: 1 1/2" = 1'-0"

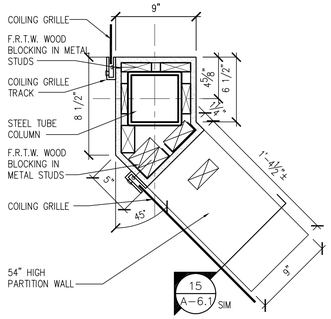

13 A-6.1 COILING GRILLE JAMB DETAIL
SCALE: 1 1/2" = 1'-0"

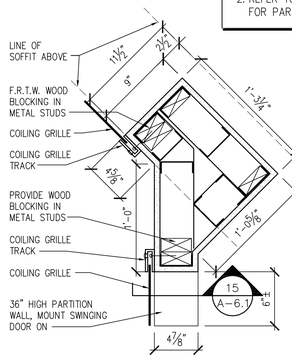

14 A-6.1 COILING GRILLE JAMB DETAIL
SCALE: 1 1/2" = 1'-0"

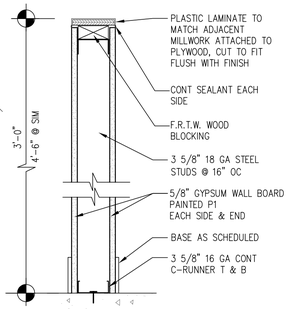

15 A-6.1 PARTITION DETAIL
SCALE: 1 1/2" = 1'-0"

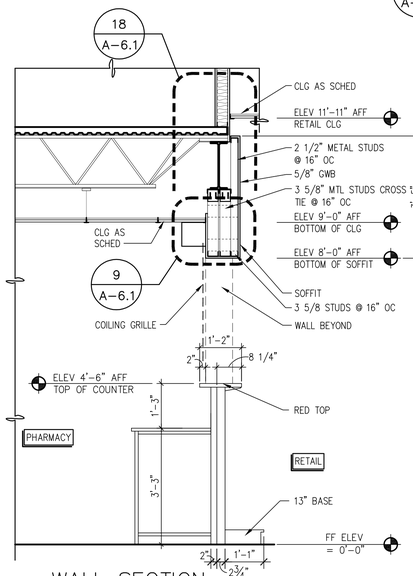

16 A-6.1 WALL SECTION AT Rx WORKBENCH
SCALE: 1/2" = 1'-0" DROP OFF COUNTER SIMILAR

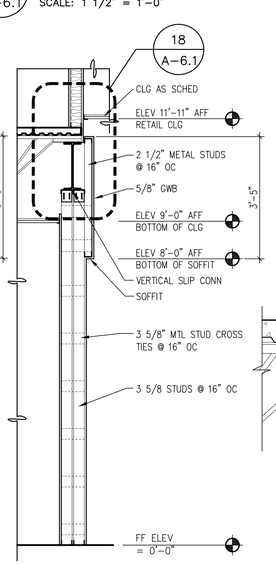

17 A-6.1 WALL SECTION
SCALE: 1/2" = 1'-0"

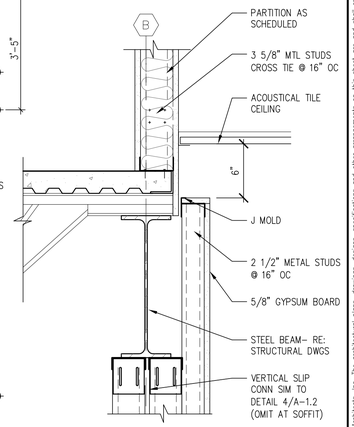

18 A-6.1 DETAIL
SCALE: 1 1/2" = 1'-0"

BKA Architects, Inc.
Architecture + Interiors
142 Crescent Street
Brockton, MA 02302
tel : 508.583.5603
fax : 508.584.2914
e-mail : bka@bkaarchs.com

CONSULTANT:

SEAL:

CVS/pharmacy

NEW

STORE NUMBER: 329

NORTHGATE PLAZA
91 AUBURN STREET
PORTLAND, MAINE

DEVELOPER:

A & D REALTY, LLC
5 MILITIA DRIVE
LEXINGTON, MA 02421

REVISIONS:

DRAWING BY: RTK
DATE: 8/31/09
JOB NUMBER: 209017
TITLE: PHARMACY PLAN, SECTIONS, & ELEVATIONS
SHEET NUMBER: A–6.1

COMMENTS:
ISSUED FOR CONSTRUCTION

Copyright © 2009 by BKA Architects, Inc. The architectural plans, drawings, designs, specifications and other arrangements on this sheet are and shall remain the property of BKA Architects, Inc. No part thereof shall be copied, disclosed to others, or used in connection with any work or project, other than the specified project for which they have been prepared and delivered, without the express knowledge and written consent of BKA Architects, Inc.

P:\Retail_Proj\209017\CVS #329\Architectural\Sheets\209017_A61.dwg Sep 02 , 2009 - 9:22 am RKUHN

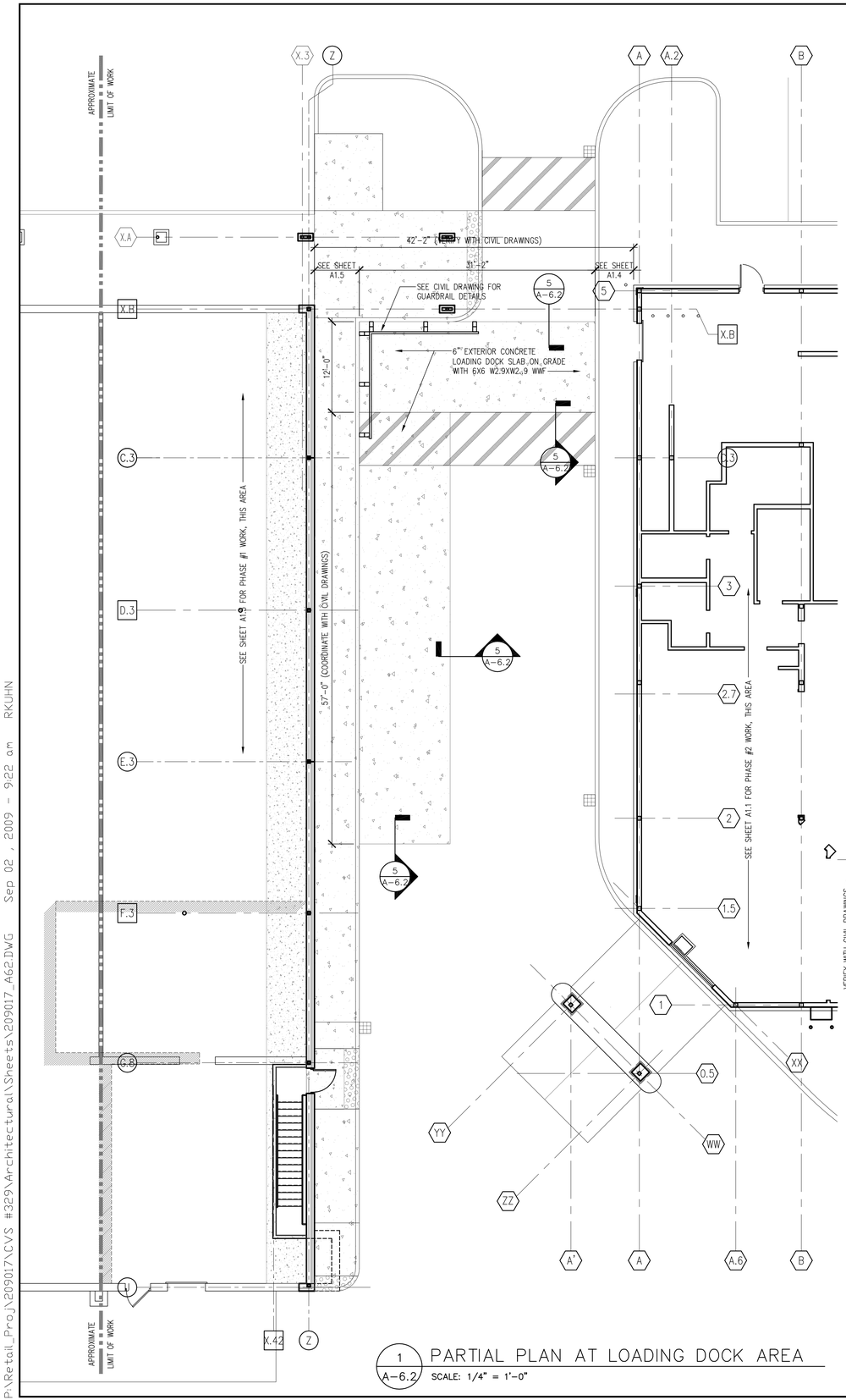

1 A-6.2 PARTIAL PLAN AT LOADING DOCK AREA
SCALE: 1/4" = 1'-0"

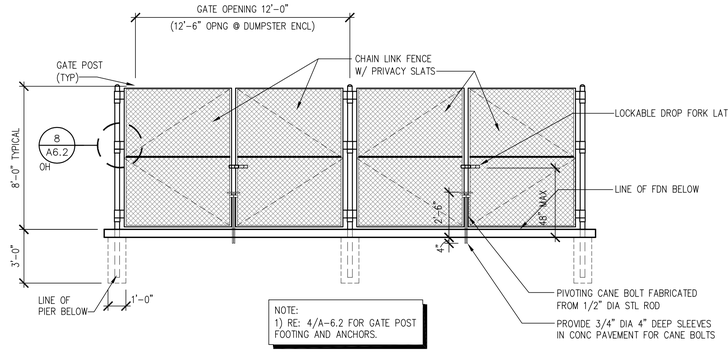

2 A-6.2 COMPACTOR / DUMPSTER ELEVATION
SCALE: 1/4" = 1'-0"

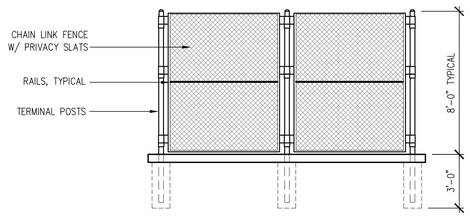

3 A-6.2 COMPACTOR / DUMPSTER ELEVATION
SCALE: 1/4" = 1'-0"

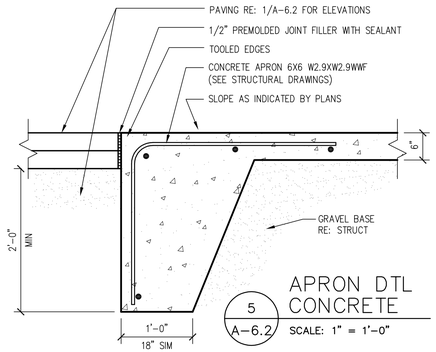

5 A-6.2 APRON DTL CONCRETE
SCALE: 1" = 1'-0"

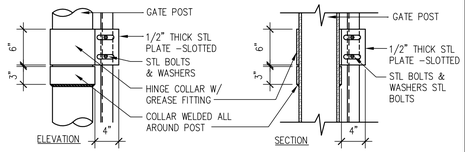

NOTE:
SECTIONS & DETAILS ALSO APPLY TO DUMPSTER ENCLOSURE, RE: SITE PLAN FOR DUMPSTER LOCATION

8 A-6.2 GATE HINGE DETAIL
SCALE: 1" = 1'-0"

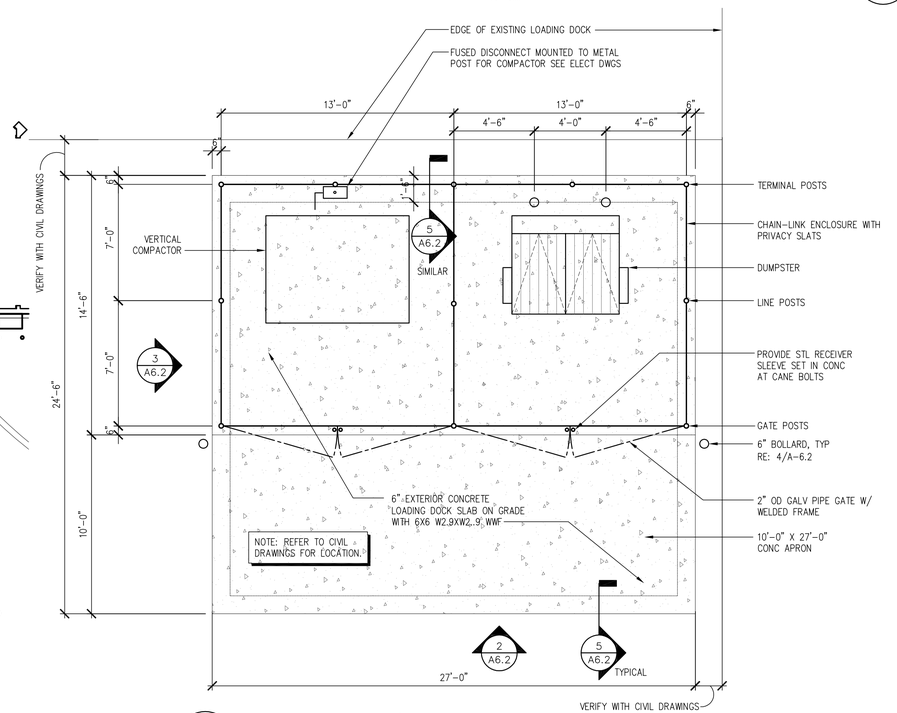

9 A-6.2 COMPACTOR / DUMPSTER PLAN
SCALE: 1/4" = 1'-0"

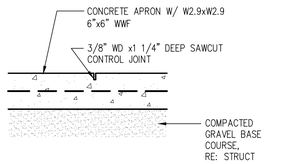

7 A-6.2 CONTROL JOINT DETAIL
SCALE: 1" = 1'-0"

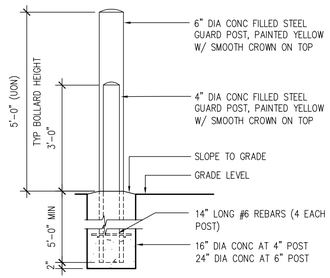

4 A-6.2 BOLLARD DETAIL
SCALE: 1/2" = 1'-0"

BKA Architects, Inc.
Architecture + Interiors
142 Crescent Street
Brockton, MA 02302
tel : 508.583.5603
fax : 508.584.2914
e-mail : bka@bkaarchs.com

CONSULTANT:

SEAL:

CVS/ pharmacy

NEW

STORE NUMBER: 329

NORTHGATE PLAZA
91 AUBURN STREET
PORTLAND, MAINE

DEVELOPER:

A & D REALTY, LLC
5 MILITIA DRIVE
LEXINGTON, MA 02421

REVISIONS:

DRAWING BY:	RTK
DATE:	8/31/09
JOB NUMBER:	209017

TITLE:
ENLARGED PLANS & DETAILS

SHEET NUMBER:
A-6.2

COMMENTS:
ISSUED FOR CONSTRUCTION

Copyright © 2006 by BKA Architects, Inc. The architectural plans (drawings, designs, specifications and other documents) on this sheet are and shall remain the property of BKA Architects, Inc. No part thereof shall be copied, disclosed to others, or used in connection with any work or project, other than the specified project for which they have been prepared and delivered, without the express knowledge and written consent of BKA Architects, Inc.

P:\Retail_Proj\209017\CVS #329\Architectural\Sheets\209017_A62.DWG Sep 02 , 2009 - 9:22 am RKUHN

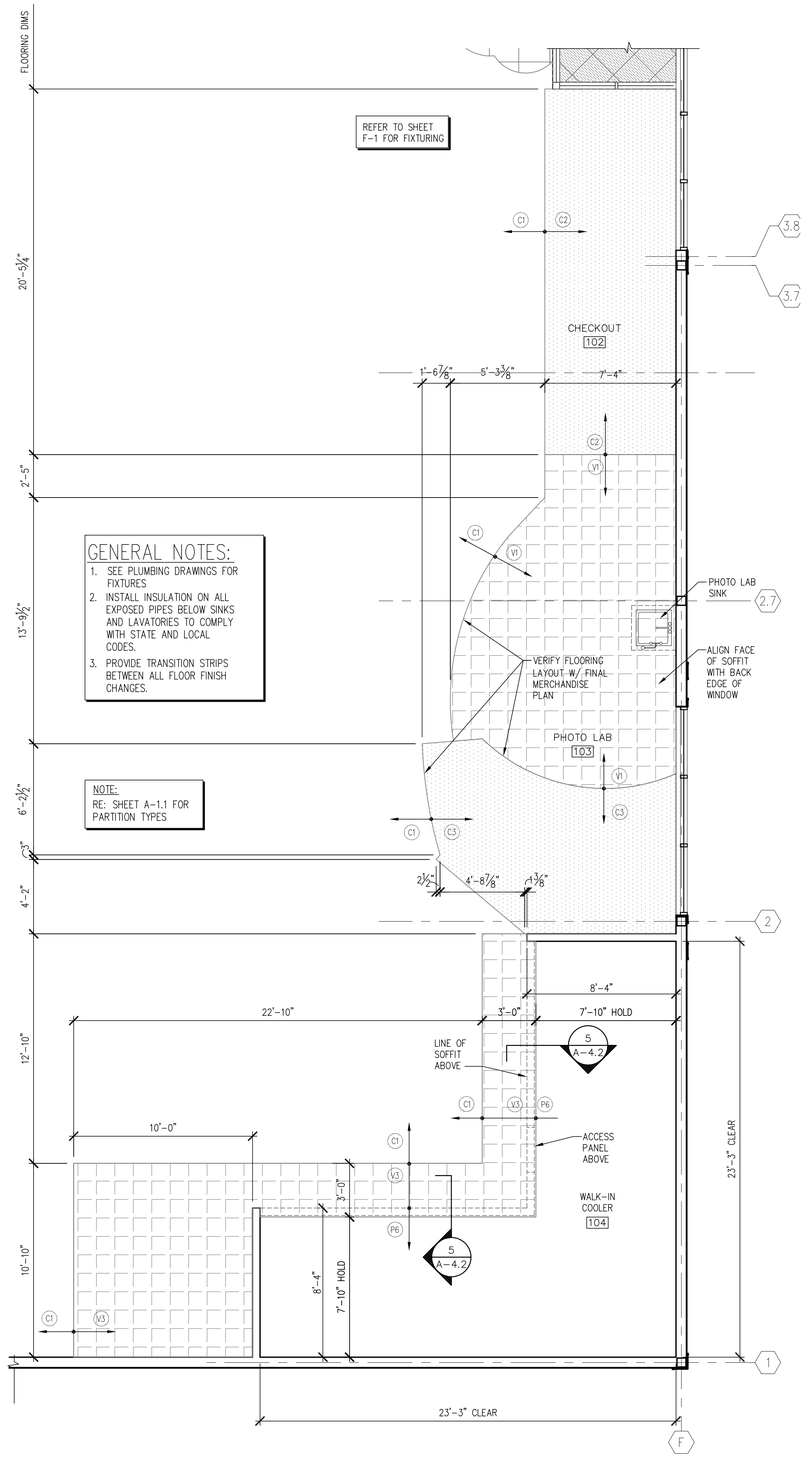

GENERAL NOTES:

1. SEE PLUMBING DRAWINGS FOR FIXTURES
2. INSTALL INSULATION ON ALL EXPOSED PIPES BELOW SINKS AND LAVATORIES TO COMPLY WITH STATE AND LOCAL CODES.
3. PROVIDE TRANSITION STRIPS BETWEEN ALL FLOOR FINISH CHANGES.

NOTE:
RE: SHEET A-1.1 FOR PARTITION TYPES

1 / A-6.3 CHECKOUT AND PHOTO LAB
SCALE: 1/4" = 1'-0"

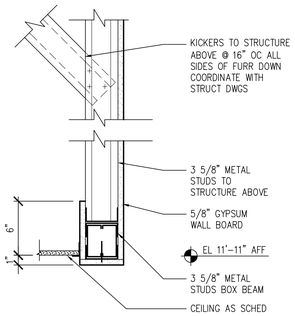

2 / A-6.3 DETAIL AT VESTIBULE
SCALE: 1 1/2" = 1'-0"

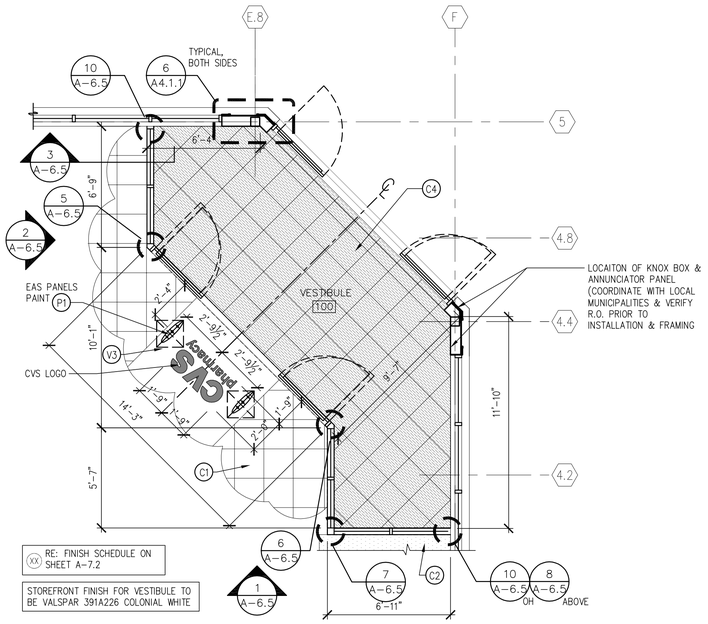

3 / A-6.3 ENLARGED VESTIBULE
SCALE: 1/4" = 1'-0"

BKA Architects, Inc.
Architecture + Interiors

142 Crescent Street
Brockton, MA 02302

tel : 508.583.5603
fax : 508.584.2914
e-mail : bka@bkaarchs.com

CONSULTANT:

SEAL:

CVS/pharmacy

NEW

STORE NUMBER: 329

NORTHGATE PLAZA
91 AUBURN STREET
PORTLAND, MAINE

DEVELOPER:

A & D REALTY, LLC
5 MILITIA DRIVE
LEXINGTON, MA 02421

REVISIONS:

DRAWING BY:	RTK
DATE:	8/31/09
JOB NUMBER:	209017

TITLE:
ENLARGED PLANS, DETAILS, & ELEVATIONS

SHEET NUMBER:
A-6.3

COMMENTS:
ISSUED FOR CONSTRUCTION

Copyright © 2006 by BKA Architects, Inc. The architectural plans, drawings, designs, specifications and other documents on this sheet are and shall remain the property of BKA Architects, Inc. No part hereof shall be copied, disclosed to others, or used in connection with any work of project, other than the specified project for which they have been prepared and delivered, without the express knowledge and written consent of BKA Architects, Inc.

P:\Retail_Proj\209017\CVS #329\Architectural\Sheets\209017_A63.dwg Sep 02, 2009 - 9:23 am RKUHN

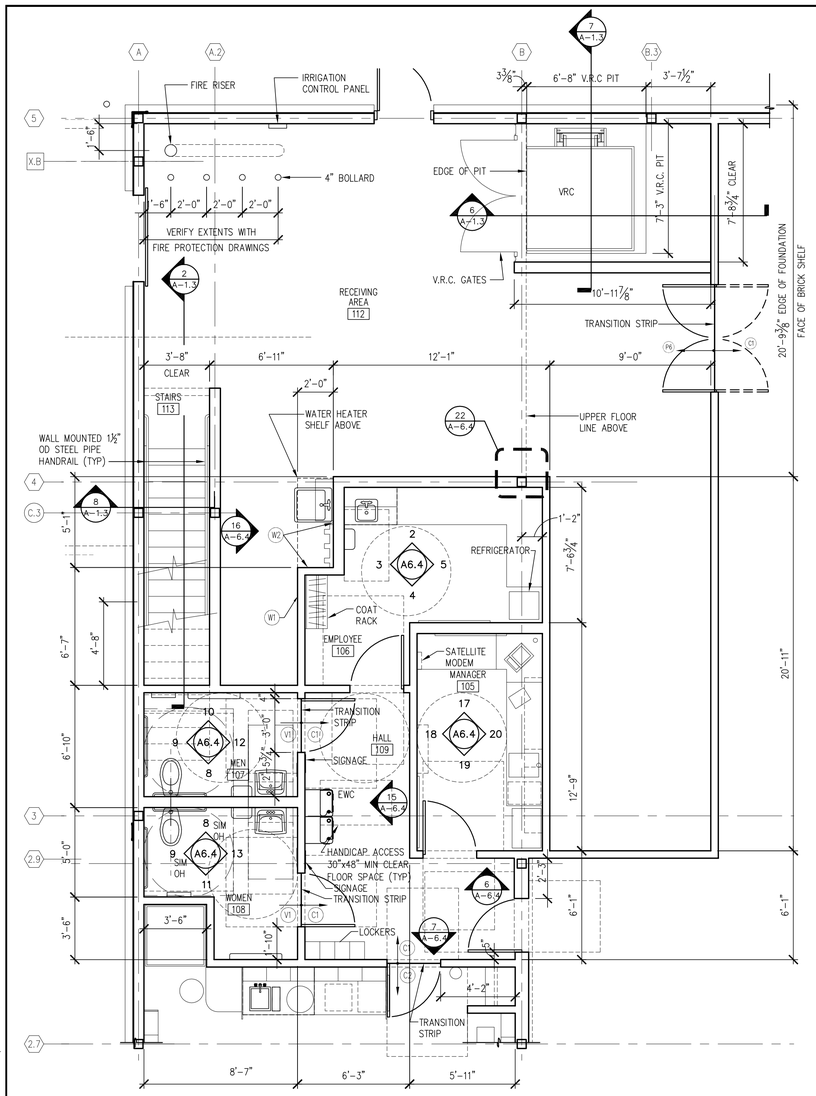

1 A-6.4 RESTROOMS AND EMPLOYEE PLAN
SCALE: 1/4" = 1'-0"

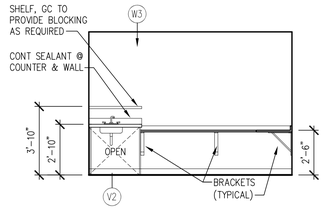

2 A-6.4 EMPLOYEE ELEV
SCALE: 1/4" = 1'-0"

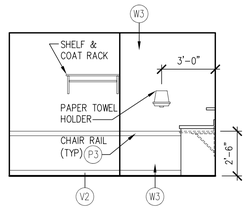

3 A-6.4 EMPLOYEE ELEV
SCALE: 1/4" = 1'-0"

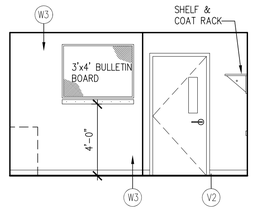

4 A-6.4 EMPLOYEE ELEV
SCALE: 1/4" = 1'-0"

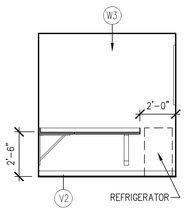

5 A-6.4 EMPLOYEE ELEV
SCALE: 1/4" = 1'-0"

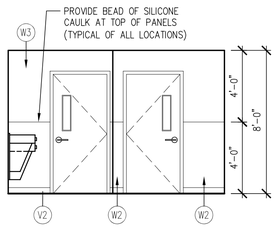

6 A-6.4 HALL ELEVATION
SCALE: 1/4" = 1'-0"

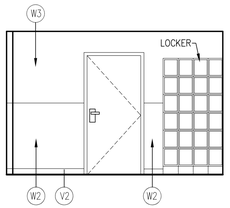

7 A-6.4 HALL ELEVATION
SCALE: 1/4" = 1'-0"

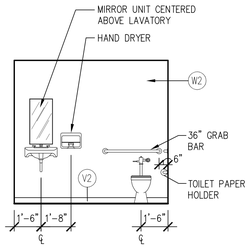

8 A-6.4 TOILET ELEVATION
SCALE: 1/4" = 1'-0"

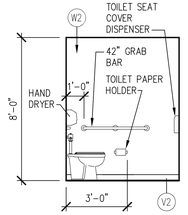

9 A-6.4 TOILET ELEVATION
SCALE: 1/4" = 1'-0"

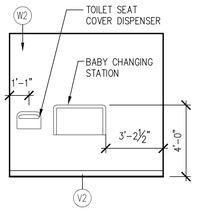

10 A-6.4 TOILET ELEVATION
SCALE: 1/4" = 1'-0"

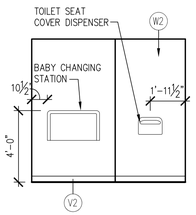

11 A-6.4 TOILET ELEVATION
SCALE: 1/4" = 1'-0"

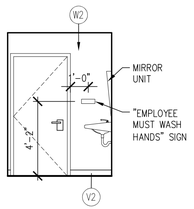

12 A-6.4 TOILET ELEVATION
SCALE: 1/4" = 1'-0"

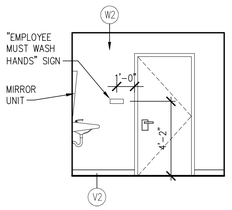

13 A-6.4 TOILET ELEVATION
SCALE: 1/4" = 1'-0"

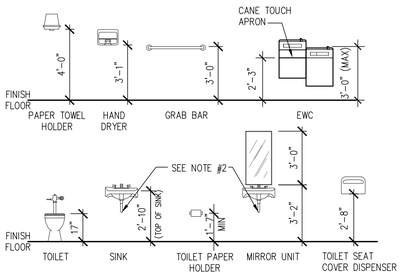

14 A-6.4 ACCESS. MOUNTING HEIGHTS
SCALE: 1/4" = 1'-0" NOTE: VERIFY HEIGHT WITH LOCAL CODES

NOTE:
RE: SHEET A-1.1 FOR PARTITION TYPES

GENERAL NOTES:

1. SEE PLUMBING DRAWINGS FOR FIXTURES
2. INSTALL INSULATION ON ALL EXPOSED PIPES BELOW SINKS AND LAVATORIES TO COMPLY WITH STATE AND LOCAL CODES.
3. SEE 14/A-6.4 FOR MOUNTING HEIGHTS OF ALL TOILET ROOM ACCESSORIES

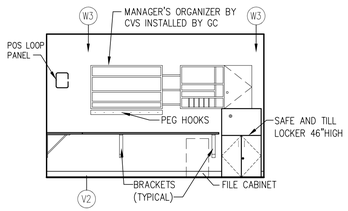

20 A-6.4 MANAGER'S OFFICE ELEV
SCALE: 1/4" = 1'-0"

21 A-6.4 NOT USED
--

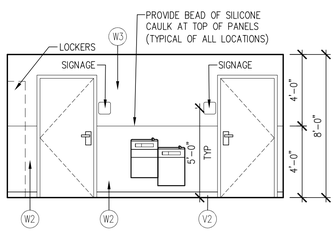

15 A-6.4 HALL ELEVATION
SCALE: 1/4" = 1'-0"

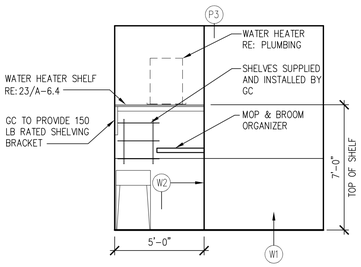

16 A-6.4 UTILITY SINK ELEV
SCALE: 1/4" = 1'-0"

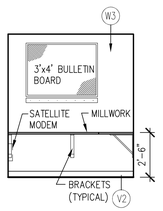

17 A-6.4 MANAGER'S OFFICE ELEV
SCALE: 1/4" = 1'-0"

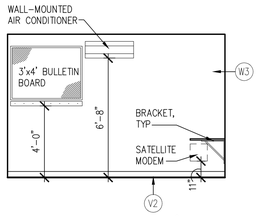

18 A-6.4 MANAGER'S OFFICE ELEV
SCALE: 1/4" = 1'-0"

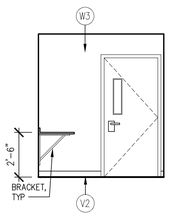

19 A-6.4 MANAGER'S OFFICE ELEV
SCALE: 1/4" = 1'-0"

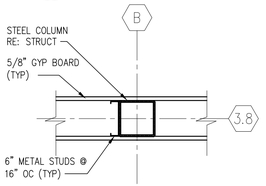

22 A-6.4 COLUMN WRAP
SCALE: 1" = 1'-0"

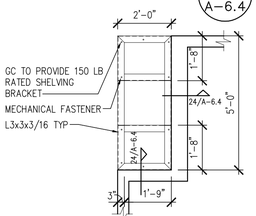

23 A-6.4 SHELF FRAMING
SCALE: 3/8" = 1'-0"

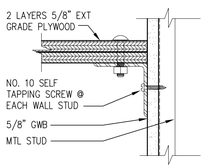

24 A-6.4 DETAIL
SCALE: 3" = 1'-0"

BKA Architects, Inc.
Architecture + Interiors
142 Crescent Street
Brockton, MA 02302
tel : 508.583.5603
fax : 508.584.2914
e-mail : bka@bkaarchs.com

CONSULTANT:

SEAL:

CVS/pharmacy

NEW

STORE NUMBER: 329

NORTHGATE PLAZA
91 AUBURN STREET
PORTLAND, MAINE

DEVELOPER:

A & D REALTY, LLC
5 MILITIA DRIVE
LEXINGTON, MA 02421

REVISIONS:

DRAWING BY:	RTK
DATE:	8/31/09
JOB NUMBER:	209017

TITLE:
ENLARGED PLANS, DETAILS, & ELEVATIONS

SHEET NUMBER:
A-6.4

COMMENTS:
ISSUED FOR CONSTRUCTION

Copyright © 2009 by BKA Architects, Inc. The architectural plans, drawings, designs, specifications and other arrangements on this sheet are and shall remain the property of BKA Architects, Inc. No part thereof shall be copied, disclosed to others, or used in connection with any work or project, other than the specified project for which they have been prepared and delivered, without the express knowledge and written consent of BKA Architects, Inc.

P:\Retail_Proj\209017\CVS #329\Architectural\Sheets\209017_A64.dwg Sep 02 , 2009 - 9:24 am RKUHN

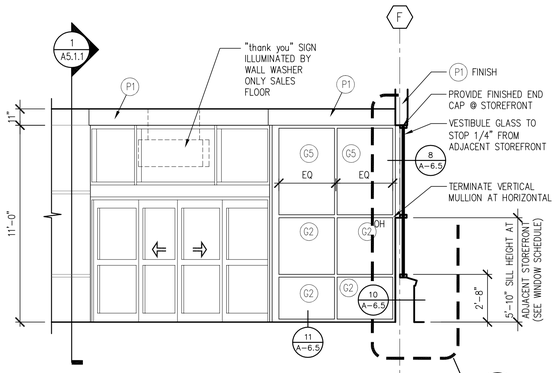

1 A-6.5 VESTIBULE ELEVATION
SCALE: 1/4" = 1'-0"

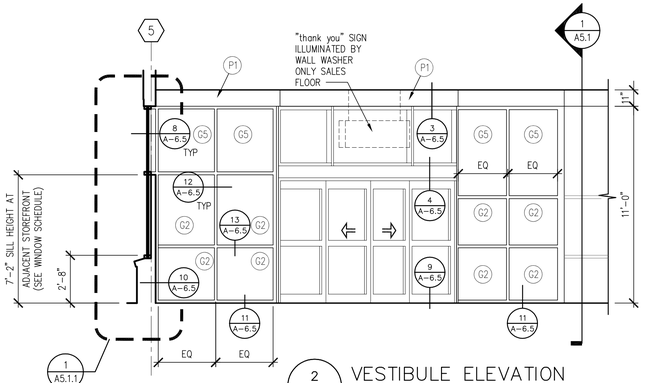

2 A-6.5 VESTIBULE ELEVATION
SCALE: 1/4" = 1'-0"

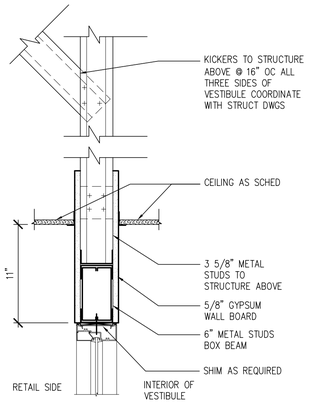

3 A-6.5 VESTIBULE HEAD DETAIL
SCALE: 1 1/2" = 1'-0"

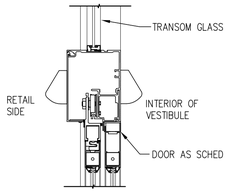

4 A-6.5 VESTIBULE DOOR HEADER
SCALE: 1 1/2" = 1'-0"

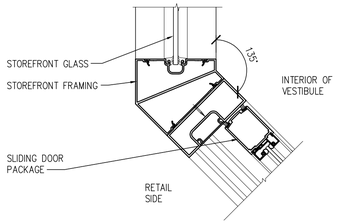

5 A-6.5 VESTIBULE CORNER DETAIL
SCALE: 3" = 1'-0"

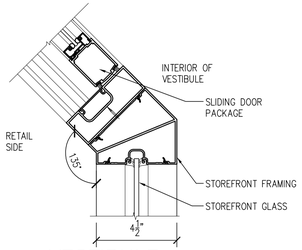

6 A-6.5 VESTIBULE CORNER DETAIL
SCALE: 3" = 1'-0"

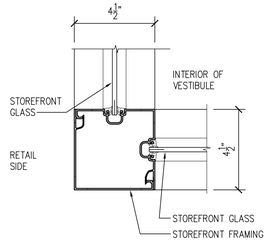

7 A-6.5 VESTIBULE CORNER DETAIL
SCALE: 3" = 1'-0"

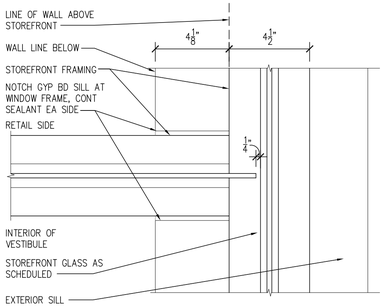

8 A-6.5 VESTIBULE JAMB DETAIL
SCALE: 3" = 1'-0"

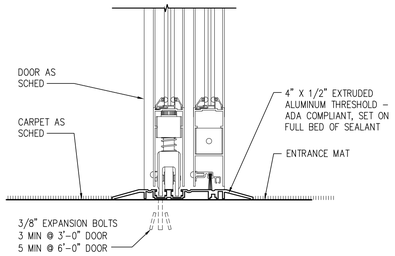

9 A-6.5 THRESH DETAIL
SCALE: 3" = 1'-0"

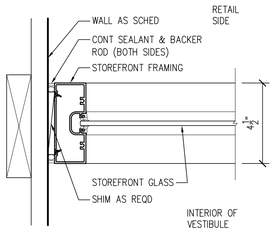

10 A-6.5 VESTIBULE JAMB DETAIL
SCALE: 3" = 1'-0"

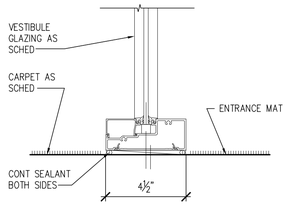

11 A-6.5 SILL DETAIL
SCALE: 3" = 1'-0"

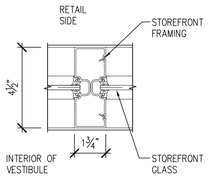

12 A-6.5 VESTIBULE VERTICAL MULLION
SCALE: 3" = 1'-0"

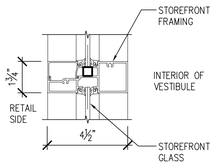

13 A-6.5 VESTIBULE HORIZONTAL MULLION
SCALE: 3" = 1'-0"

BKA Architects, Inc.
Architecture + Interiors
142 Crescent Street
Brockton, MA 02302
tel : 508.583.5603
fax : 508.584.2914
e-mail : bka@bkaarchs.com

CONSULTANT:

SEAL:

CVS/pharmacy

NEW

STORE NUMBER: 329

NORTHGATE PLAZA
91 AUBURN STREET
PORTLAND, MAINE

DEVELOPER:

A & D REALTY, LLC
5 MILITIA DRIVE
LEXINGTON, MA 02421

REVISIONS:

DRAWING BY:	RTK
DATE:	8/31/09
JOB NUMBER:	209017

TITLE:
VESTIBULE ELEVATIONS & DETAILS

SHEET NUMBER:
A-6.5

COMMENTS:
ISSUED FOR CONSTRUCTION

Copyright © 2009 by BKA Architects, Inc. The architectural plans, drawings, designs, specifications and other arrangements on this sheet are and shall remain the property of BKA Architects, Inc. No part thereof shall be copied, disclosed to others, or used in connection with any work or project, other than the specified project for which they have been prepared and delivered, without the express knowledge and written consent of BKA Architects, Inc.

P:\Retail_Proj\209017\CVS #329\Architectural\Sheets\209017_a65.dwg Sep 02 , 2009 - 9:24 am RKUHN

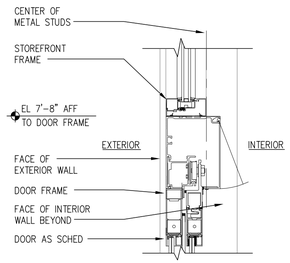

1 A-7.1 EXTERIOR VESTIBULE HEAD DETAIL
SCALE: 1 1/2" = 1'-0"

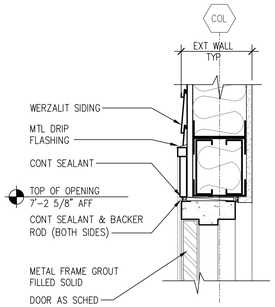

2 A-7.1 HEAD DETAIL
SCALE: 1 1/2" = 1'-0"

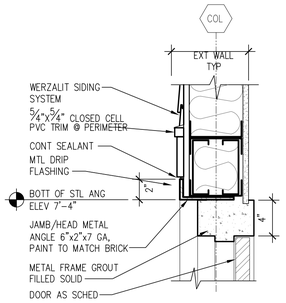

3 A-7.1 HEAD DETAIL
SCALE: 1 1/2" = 1'-0"

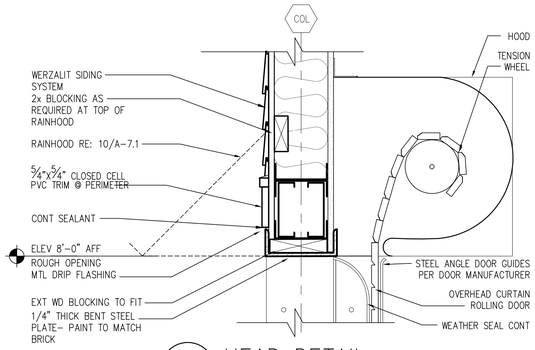

4 A-7.1 HEAD DETAIL
SCALE: 1 1/2" = 1'-0"

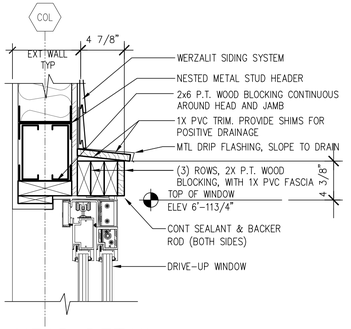

5 A-7.1 HEAD DETAIL @ DRIVE-THRU
SCALE: 1 1/2" = 1'-0"

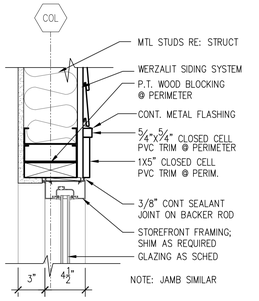

6 A-7.1 WINDOW HEAD & TYPICAL PVC TRIM DETAIL
SCALE: 1 1/2" = 1'-0"

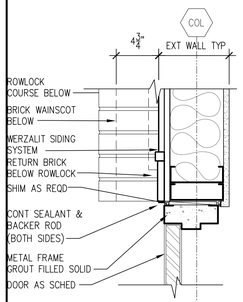

8 A-7.1 JAMB DETAIL
SCALE: 1 1/2" = 1'-0"

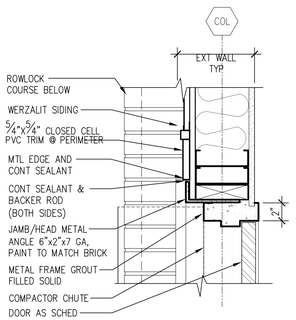

9 A-7.1 JAMB DETAIL
SCALE: 1 1/2" = 1'-0"

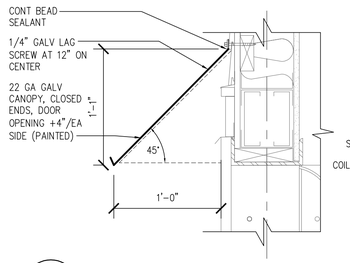

10 A-7.1 CANOPY SECTION
SCALE: 1 1/2" = 1'-0"
FOR ADDITIONAL INFORMATION FOR HEAD DETAIL RE: 4/A-7.1

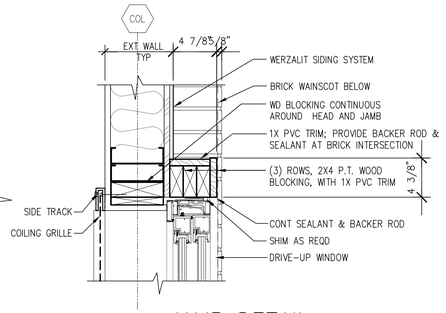

11A A-7.1 JAMB DETAIL @ DRIVE-THRU
SCALE: 1 1/2" = 1'-0"

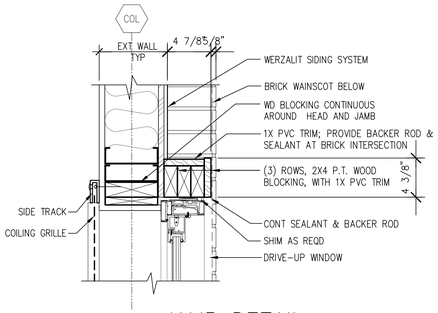

11B A-7.1 JAMB DETAIL @ DRIVE-THRU
SCALE: 1 1/2" = 1'-0"

7 A-7.1 NOT USED
SCALE: 1 1/2" = 1'-0"

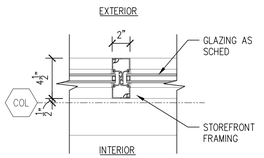

12 A-7.1 MULLION DETAIL
SCALE: 1 1/2" = 1'-0"

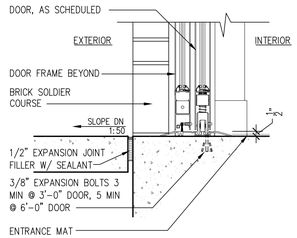

13 A-7.1 EXTERIOR VESTIBULE THRESH DETAIL
SCALE: 1 1/2" = 1'-0"

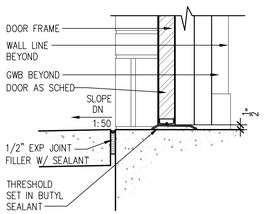

14 A-7.1 THRESH DETAIL
SCALE: 1 1/2" = 1'-0"

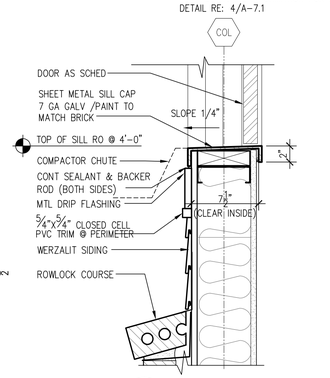

15 A-7.1 SILL DETAIL
SCALE: 1 1/2" = 1'-0"

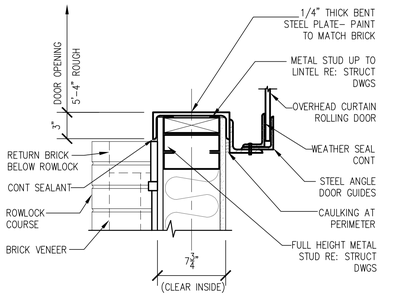

16 A-7.1 JAMB DETAIL
SCALE: 1 1/2" = 1'-0"

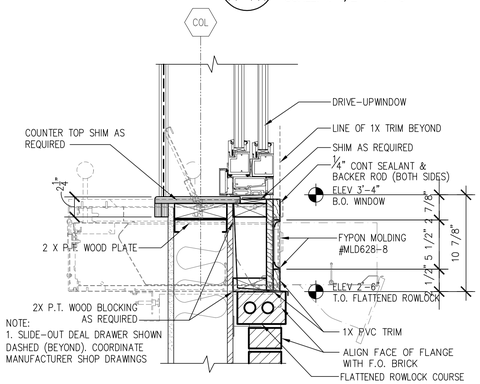

17 A-7.1 SILL DETAIL
SCALE: 1 1/2" = 1'-0"

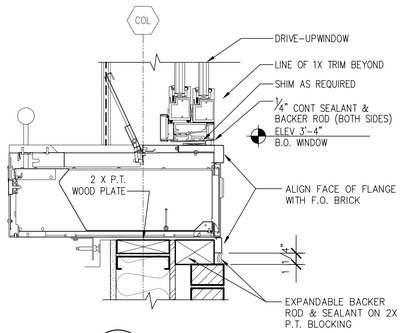

18 A-7.1 SILL DETAIL
SCALE: 1 1/2" = 1'-0"

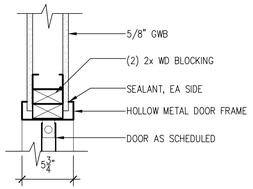

19 A-7.1 JAMB/ HEAD SIM
SCALE: 1 1/2" = 1'-0"

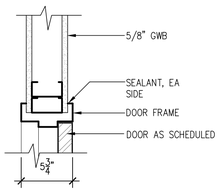

TYPICAL HOLLOW METAL DOOR IN GWB CONSTRUCTION

20 A-7.1 JAMB/ HEAD SIM
SCALE: 1 1/2" = 1'-0"

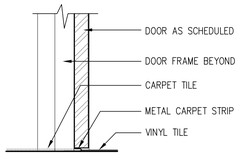

21 A-7.1 THRESH DETAIL
SCALE: 1 1/2" = 1'-0"

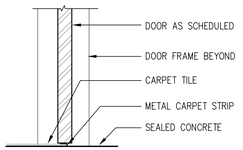

22 A-7.1 THRESH DETAIL
SCALE: 1 1/2" = 1'-0"

GENERAL SHEET NOTES:
1. IN ORDER TO MAINTAIN AIR BARRIER, ALL ROUGH OPENING HEAD, JAMBS & SILLS TO BE WRAPPED IN TYVEK COMMERCIAL WRAP, AND PEEL & STICK MEMBRANE. SEE AIR BARRIER NOTES IN "DESIGN CRITERIA CHART" (SHEET A5.0)

BKA Architects, Inc.
Architecture + Interiors
142 Crescent Street
Brockton, MA 02302
tel : 508.583.5603
fax : 508.584.2914
e-mail : bka@bkaarchs.com

CONSULTANT:

SEAL:

CVS/ pharmacy

NEW

STORE NUMBER: 329

NORTHGATE PLAZA
91 AUBURN STREET
PORTLAND, MAINE

DEVELOPER:

A & D REALTY, LLC
5 MILITIA DRIVE
LEXINGTON, MA 02421

REVISIONS:

DRAWING BY: RTK
DATE: 8/31/09
JOB NUMBER: 209017
TITLE: DOOR & WINDOW DETAILS
SHEET NUMBER: A-7.1
COMMENTS: ISSUED FOR CONSTRUCTION

Copyright © 2008 by BKA Architects, Inc. The architectural plans, drawings, designs, specifications and other improvements on this sheet are and shall remain the property of BKA Architects, Inc. No part thereof shall be copied, disclosed to others, or used in connection with any work or project, other than the specified project for which they have been prepared and delivered, without the express knowledge and written consent of BKA Architects, Inc.

P:\Retail_Proj\209017\CVS #329\Architectural\Sheets\209017_a7i.dwg Sep 02, 2009 - 9:24 am RKUHN

INTERIOR FINISH SCHEDULE

TAG	MATERIAL / DESCRIPTION	MFR.	STYLE/ CAT. NO.	COLOR	NOTES
ACOUSTICAL					
A1	CEILING TILE	ARMSTRONG	769	WHITE	2 x 4 PANELS
CARPET					
C1	CARPET TILES	INTERFACE	FLOR 60300	#603055 GREY	REFER TO "CARPET TILE" SPEC
C2	CUSHION BACKED CARPET TILE	INTERFACE	ENTROPY 14648	#7233 DEEP BLUE	REFER TO "CARPET TILE" SPEC
C3	HARD BACKED CARPET TILE	INTERFACE	ENTROPY 14648	#7233 DEEP BLUE	REFER TO "CARPET TILE" SPEC
C4	RIBBED ENTRANCE TILES	INTERFACE	DECO-RIB 62301	#602371 ANTHRACITE	REFER TO "CARPET TILE" SPEC
GLAZING					
G1	1" INSUL GLASS			CLEAR	
G2	1/4" LAMINATED GLASS			CLEAR	
G3	1/4" ONE WAY MIRROR	PILKINGTON	MIRROPANE E.P.		GLASS IN DOORS TO BE TEMPERED
G4	BULLET RESISTIVE GLASS			CLEAR	
G5	1/4" FLOAT GLASS			CLEAR	GLASS IN DOORS TO BE TEMPERED
G6	1" INSUL SPANDREL GLASS	VIRACON		V903 SUBDUED GRAY	
PAINTS / SEALANTS					
P1	PAINT	BENJAMIN MOORE	876	ATRIUM WHITE (AKA ALABASTER)	ECOSPEC 374, 2 COATS, PAINT ABOVE 60" AFF ALSO USED FOR EAS PEDESTALS.
P2	PAINT	BENJAMIN MOORE	2124-30	DEEP SILVER	PAINT HANDRAIL AND STAIRS, STAIRS TO HAVE SAND FINISH.
P3	PAINT	BENJAMIN MOORE	2137-60	GRAY OWL	ECOSPEC 374, 2 COATS, WALL/TRIM PAINT.
P4	PAINT	BENJAMIN MOORE	2059-60	SPLASH	ECOSPEC 374, 2 COATS, WALL/TRIM PAINT.
P5	POLYURETHANE	BENJAMIN MOORE	BENWOOD C435	CLEAR	2 COATS
P6	CONCRETE SEALER	THE EUCLID CHEMICAL CO.	EUCO DIAMOND HARD	CLEAR	2 COATS
P7	GRAFFITI PROTECTION COAT	RANDOLPH	"ARMAGLAZE" #9000	CLEAR	NOT IN CONTRACT
P8	PRIMER	NU-BRITE/MURALC	8400/CLEAR		
P9	PAINT	BENJAMIN MOORE	1669	SARATOGA SPRINGS	ECOSPEC 374, 2 COATS, WALL/TRIM PAINT.
VINYL					
V1	VINYL TILE	ARMSTRONG	51915	CHARCOAL	
V2	VINYL BASE	BURKEMERCER	4GL COVE	204 GREY	
V3	VINYL TILE	CENTIVA	C-1167	LIGHT GRANITE	REFER TO "RESILIENT TILE FLOORING" SPEC
V4	VINYL BASE	BURKEMERCER	4GL COVE	663 SKY GREY	PHOTO LAB MILLWORK
WALL COVERING					
W1	1/2" F.R.T.W. PLYWOOD			UNPAINTED	
W2	WATERPROOF WALL PANEL	MARLITE	P-100	WHITE	
W3	WALL COVERING	WOLF GORDON	WG-4098351	FAIRVIEW	
W4	WALL COVERING	WOLF GORDON	WG-870526		INSTALL STRIPES RUNNING VERTICAL
W5	WALL COVERING	WOLF GORDON	WG-958612		
W6	WALL COVERING	WOLF GORDON	WG-4094001	WHITE STIPPE	87" HIGH AFF WHERE NO FIXTURES ARE PLACED. COORDINATE EXTENT OF WALL COVERING WITH UPDATED MERCHANDISE PLAN.

DOOR AND FRAME SCHEDULE

TAG	TYPE	DOOR SIZE WD	DOOR SIZE HGT	DOOR SIZE THK	DOOR MATL	GLAZING	LOUVER WD	LOUVER HGT	FRAME MATL	FRAME DETAIL HEAD	FRAME DETAIL JAMB	FRAME DETAIL SILL	FIRE RATING LABEL	HARDWARE SET NO.	NOTES
1	A	14'-0"	7'-8"	—	AL.	G2			AL.	1/A-7.1	7/A-7.1	13/A-7.1	—	HWS-01	12. 14.
2	B	3'-0"	7'-0"	1 3/4"	INS. H.M.				H.M.	2/A-7.1	8/A-7.1	14/A-7.1	—	HWS-02	1.
3	G	3'-2"	3'-0"	1 3/4"	INS. H.M.				H.M.	3/A-7.1	9/A-7.1	15/A-7.1	—	HWS-03	2.
4	B	3'-0"	7'-0"	1 3/4"	INS. H.M.				H.M.	2/A-7.1	8/A-7.1	14/A-7.1	—	HWS-02	2.
5	D	5'-4"	8'-0"	3/4"	—				MTL.	4/A-7.1	10/A-7.1	—	—	HWS-04	13.
6	C	3'-0"	6'-8"	1 3/4"	WD.	G2			H.M.	20/A-7.1	20/A-7.1	—	—	HWS-08	4. 6. 9.
7	C	3'-0"	6'-8"	1 3/4"	WD.	G3			H.M.	20/A-7.1	20/A-7.1	—	—	HWS-05	4. 6. 9.
8	C	3'-0"	6'-8"	1 3/4"	WD.	G5			H.M.	20/A-7.1	20/A-7.1	—	—	HWS-06	4. 6. 9.
9	B	3'-0"	6'-8"	1 3/4"	WD.				H.M.	20/A-7.1	20/A-7.1	21/A-7.1		HWS-07	4. 6.
10	B	3'-0"	6'-8"	1 3/4"	WD.				H.M.	20/A-7.1	20/A-7.1	21/A-7.1	—	HWS-07	4. 6.
11	B	3'-0"	6'-8"	1 3/4"	H.M.				H.M.	20/A-7.1	20/A-7.1	—	—	HWS-05	6. 8.
12	E	16'-11"	3'-6"	—	—					9/A-6.1	12&13/A-6.1	—	—	HWS-09	3. 7.
13	E	5'-1"	3'-6"	—	—					9/A-6.1	13&14/A-6.1	—	—	HWS-09	3. 7.
14	E	19'-4"	8'-0"	—	—					10/A-6.1	11&14/A-6.1	—	—	HWS-09	3. 7.
15	F	6'-0"	8'-0"	3/4"	S.C.				H.M.	19/A-7.1	19/A-7.1	22/A-7.1	—	HWS-09	5. 7. 10. 11.
16	H	14'-0"	7'-8"	—	AL.	G2			AL.	4/A-6.5	5&6/A-6.5	9/A-6.5	—	HWS-01	12. 15. 16.
20	B	3'-0"	6'-8"	1 3/4"	INS. H.M.				H.M.				—	SEE NOTE 17	16

REMARKS

1. PAINT PUSH SIDE DOOR & FRAME P2
2. PAINT PUSH SIDE DOOR & FRAME P3
3. MOTORIZED
4. PAINT PUSH/ PULL SIDE DOOR P4 & FRAME P2
5. TRAFFIC DOOR – PAIR OF DOORS
6. DOOR TO HAVE 1" UNDERCUT
7. FACTORY FINISH
8. PAINT PUSH/ PULL SIDE DOOR & FRAME P3
9. 6"x24" VISION PANEL, PAINT WINDOW FRAME P2
10. PAINT DOOR FRAME P2
11. DOOR TO BE PROVIDED WITH 9"x30" VISION PANEL BY MFR
12. A READILY VISIBLE DURABLE SIGN TO BE POSTED ON THE EGRESS SIDE ON OR ADJACENT TO THE DOOR STATING : "THIS DOOR TO REMAIN UNLOCKED WHEN BUILDING IS OCCUPIED." THE SIGN SHALL BE IN LETTERS 1" HIGH ON CONTRASTING BACKGROUND.
13. PAINT INTERIOR P2
14. DOOR FINISH TO BE CARNIVAL RED – VALSPAR SL4A139
15. DOOR TO BE SUPPLIED WITH TRANSOM WINDOW G5, TOP OF TRANSOM TO ALIGN W/ TOP OF STOREFRONT
16. DOOR FINISH TO BE COLONIAL WHITE – VALSPAR 391A226
17. PROVODE WEATHER SEALS, 1.5 PR BUTTS NRP, THRESHOLD AND OFFICE LEAVER LOCK SET.

DOOR TYPE

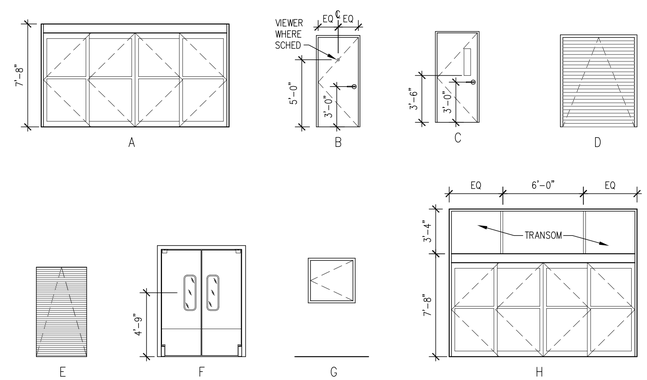

ROOM FINISH SCHEDULE

	ROOM NAME	WALLS – RE: NOTE 1: 1	2	3	4	FLR	BASE	CEIL	CEIL. HGT.	REMARKS
100	VESTIBULE	W6 P1	W6 P1	—	—	C4	V2	**	VARIES	** A1 AND GWB RE: SECTION 1/A-5.1 FOR CEILING HEIGHTS
101	RETAIL AREA *	W5 P1	W5 P1	W5 P1	W5 P1	C1	V2	A1	11'-11"	V3 RE: SHEET A-1.1
102	CHECKOUT *	W6 P1	—	—	—	C2	V2	A1	11'-11"	C2 RE: SHEETS F-1 AND A-6.3; RE: NOTE #4 BELOW
103	PHOTO LAB *	P9	—	—	P9	V4 C3	V2	A1	11'-11"	V4 ON MILLWORK ONLY
104	WALK-IN COOLER	—	—	—	—	P6	—	—	OPEN	
105	MANAGER OFFICE *	W3	W3	W3	W3	C1	V2	A1	8'-0"	
106	EMPLOYEE *	W3	W3	W3	W3	C1	V2	GWB	8'-0"	PAINT GWB CEILING P1
107	MEN *	W2	W2	W2	W2	V1	V2	GWB	8'-0"	PAINT GWB CEILING P1
108	WOMEN *	W2	W2	W2	W2	V1	V2	GWB	8'-0"	PAINT GWB CEILING P1
109	HALL *	W2 W3	W2 W3	W2 W3	W2 W3	C1	V2	GWB	8'-0"	PAINT GWB CEILING P1
110	PHARMACY *	P1	P1	P1 P4	P1 P4	C2	V2	A1	9'-0"	
111	RX SEATING *	W4 W5	W5	W4 W5	W4 W5	C3	V2	A1	9'-0"	
112	RECEIVING AREA *	W1 P3	W1 P3	W1 P3	W1 P3	P6	—	—	OPEN	ALL GWB WALLS TO RECEIVE W1 TO 4'-0" AFF DO NOT PAINT W1
113	STAIR	W1 P3	P3	W1 P3	P3	P2	—	—	OPEN	ALL GWB WALLS TO RECEIVE W1 TO 4'-0" AFF DO NOT PAINT W1
200	UPPER FLOOR	W1 P3	W1 P3	W1 P3	W1 P3	P6	—	—	OPEN	ALL GWB WALLS TO RECEIVE W1 TO 4'-0" AFF DO NOT PAINT W1

* REFER TO INTERIOR ELEVATIONS SHEETS A-4.2, A-6.1, A-6.3, A-6.4 AND A-6.5

FINISH NOTES:

1. WALLS ARE NUMBERED STARTING WITH THE FRONT WALL AS #1, AND THEN ROTATE COUNTER-CLOCKWISE.
2. ALL COLUMNS TO BE PAINTED P1 FROM FINISH FLOOR TO CEILING. RE: 9/A-4.2
3. APPLY P9 PRIOR TO ALL VINYL INSTALLATION.
4. APPLY W6 WHEN NO FIXTURES ARE PRESENT, TO 87" AFF RE: FIXTURE PLAN.

BKA Architects, Inc.
Architecture + Interiors

142 Crescent Street
Brockton, MA 02302

tel : 508.583.5603
fax : 508.584.2914
e-mail : bka@bkaarchs.com

CONSULTANT:

SEAL:

CVS/ pharmacy

NEW

STORE NUMBER: 329

NORTHGATE PLAZA
91 AUBURN STREET
PORTLAND, MAINE

DEVELOPER:

A & D REALTY, LLC
5 MILITIA DRIVE
LEXINGTON, MA 02421

REVISIONS:

DRAWING BY: RTK
DATE: 8/31/09
JOB NUMBER: 209017
TITLE:

SCHEDULES & DETAILS

SHEET NUMBER:

A-7.2

COMMENTS:
ISSUED FOR CONSTRUCTION

Copyright © 2006 by BKA Architects, Inc. The architectural plan, drawing, specifications and other arrangements on this sheet are and shall remain the property of BKA Architects, Inc. No part thereof shall be copied, disclosed to others, or used in connection with any work or project, other than the specified project for which they have been prepared and delivered, without the express knowledge and written consent of BKA Architects, Inc.

P:\Retail_Proj\209017\CVS #329\Architectural\Sheets\209017_a72.dwg Sep 02, 2009 - 9:25 am RKUHN

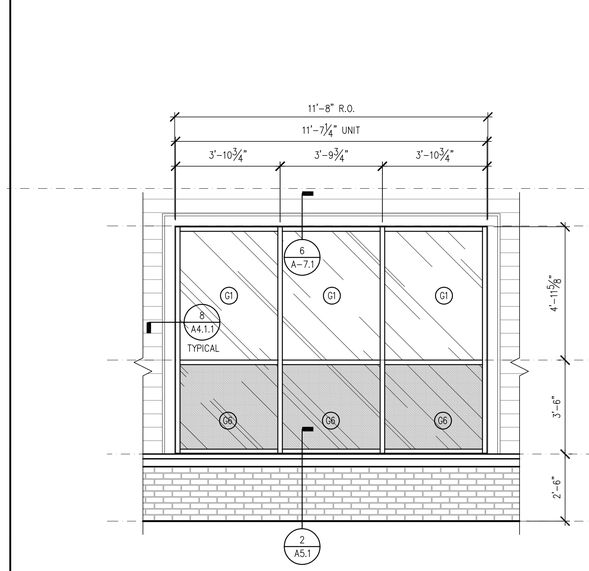

1 WINDOW TYPE
3/8"=1'-0"

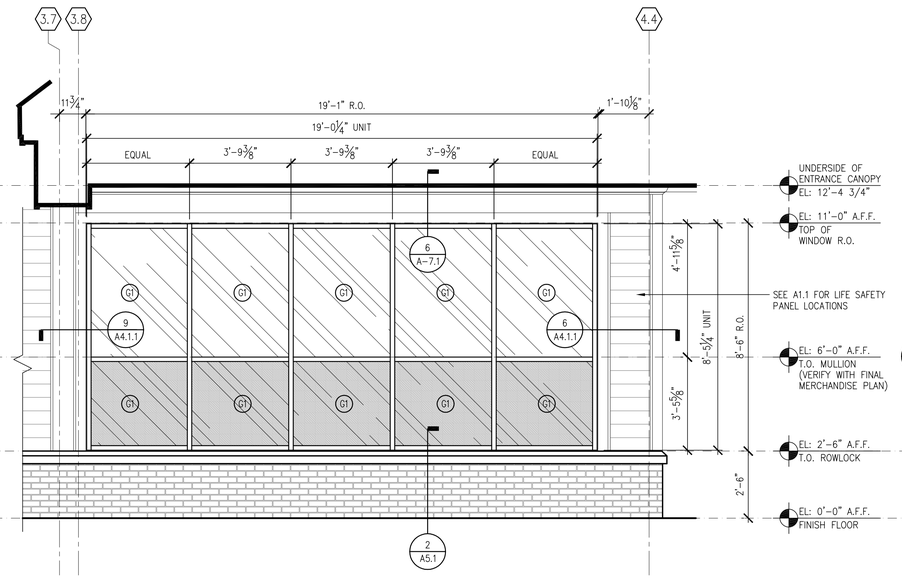

2 WINDOW TYPE
3/8"=1'-0"

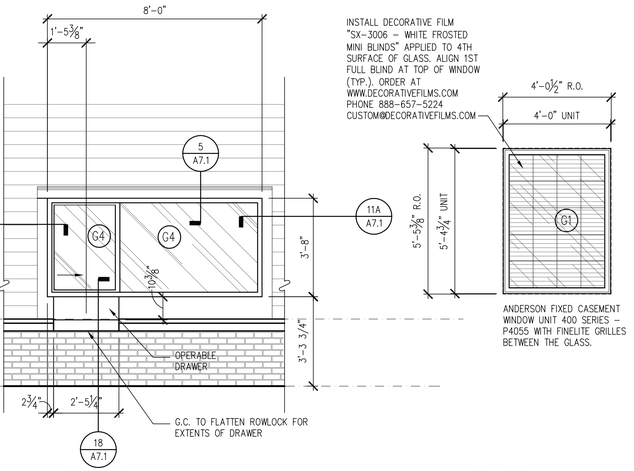

4 WINDOW TYPE
3/8"=1'-0"

5 WINDOW TYPE
3/8"=1'-0"

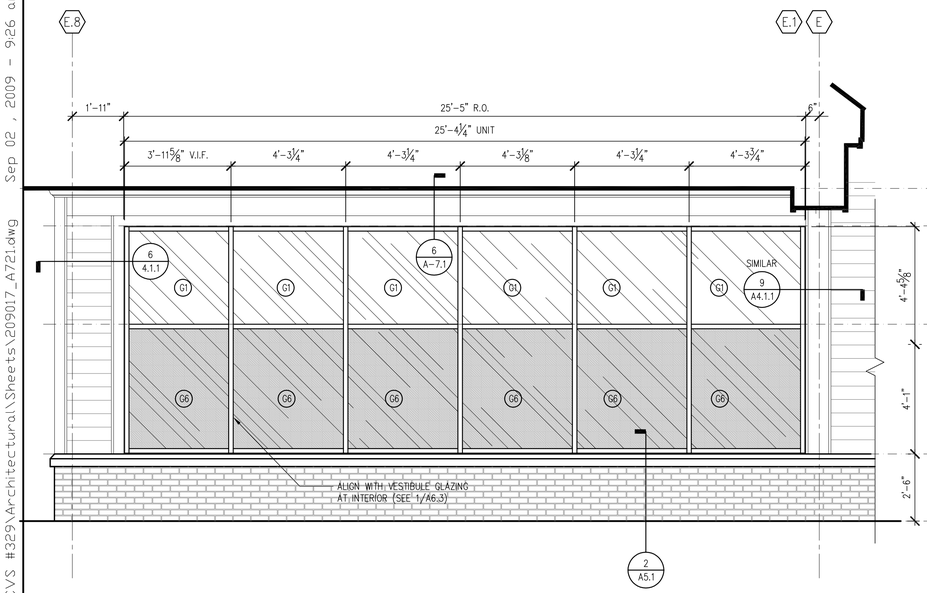

3 WINDOW TYPE
3/8"=1'-0"

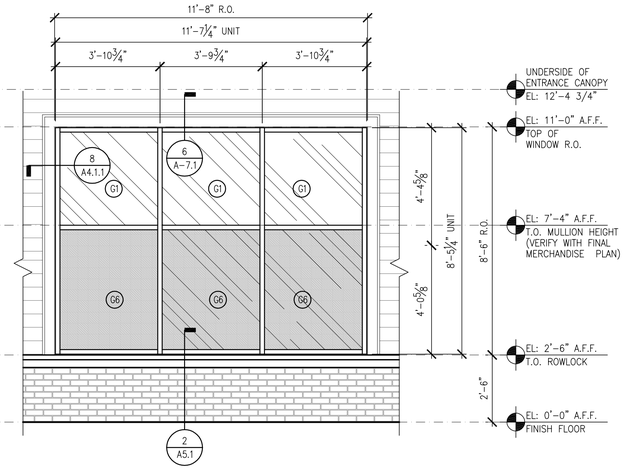

6 WINDOW TYPE
3/8"=1'-0"

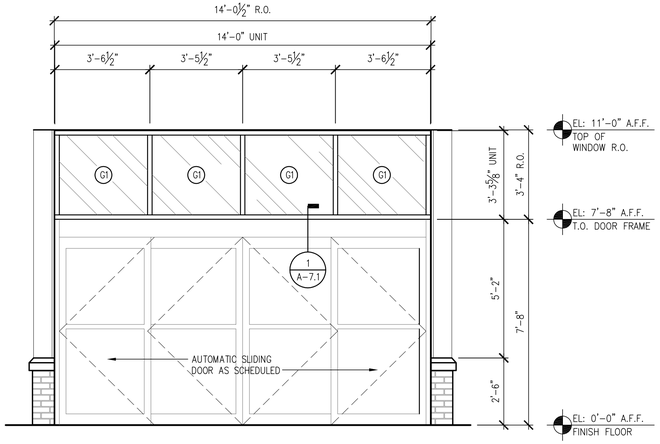

7 WINDOW TYPE
3/8"=1'-0"

P:\Retail_Proj\209017\CVS #329\Architectural\Sheets\209017_A721.dwg Sep 02 , 2009 - 9:26 am RKUHN

BKA Architects, Inc.
Architecture + Interiors

142 Crescent Street
Brockton, MA 02302

tel : 508.583.5603
fax : 508.584.2914
e-mail : bka@bkaarchs.com

CONSULTANT:

SEAL:

CVS/pharmacy

NEW

STORE NUMBER: 329

NORTHGATE PLAZA
91 AUBURN STREET
PORTLAND, MAINE

DEVELOPER:

A & D REALTY, LLC
5 MILITIA DRIVE
LEXINGTON, MA 02421

REVISIONS:

DRAWING BY:	RTK
DATE:	8/31/09
JOB NUMBER:	209017

TITLE:
WINDOW SCHEDULE

SHEET NUMBER:
A-7.2.1

COMMENTS:
ISSUED FOR CONSTRUCTION

Copyright © 2009 by BKA Architects, Inc. The architectural plans, drawings, designs, specifications and other arrangements on this sheet are and shall remain the property of BKA Architects, Inc. No part hereof shall be copied, disclosed to others, or used in connection with any work or project, other than the specified project for which they have been prepared and delivered, without the express knowledge and written consent of BKA Architects, Inc.

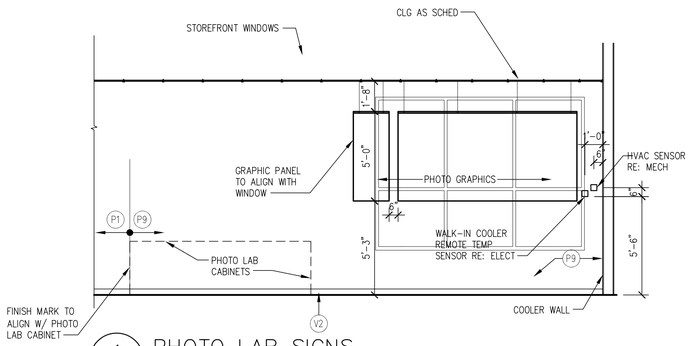

1 A-8.1 PHOTO LAB SIGNS
SCALE: 1/4" = 1'-0"

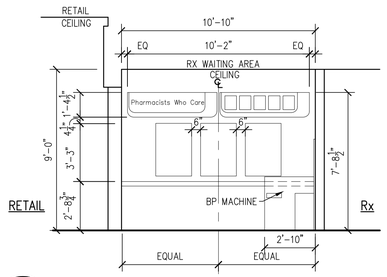

2 A-8.1 PHARMACY WAITING AREA SIGNS
SCALE: 1/4" = 1'-0"

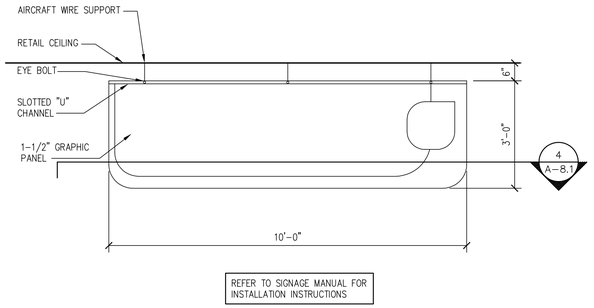

3 A-8.1 GRAPHIC PANELS ELEVATION (TYP)
SCALE: 1/2" = 1'-0"

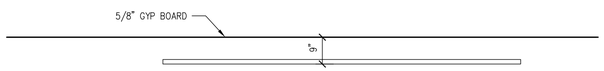

4 A-8.1 GRAPHIC PANELS SECTION (TYP)
SCALE: 1/2" = 1'-0"

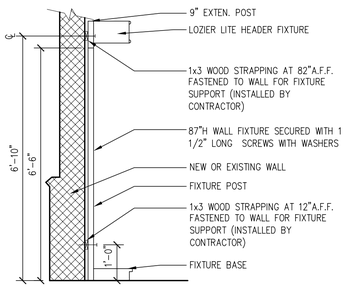

5 A-8.1 WALL UNIT SUPPORT DETAIL LOZIER FIXTURE
SCALE: 1/2" = 1'-0"

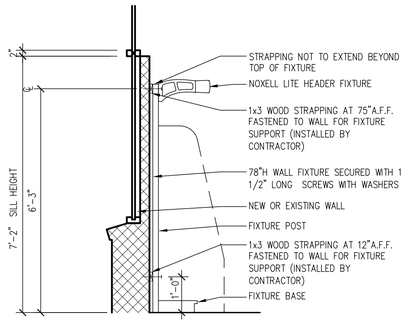

6 A-8.1 WALL UNIT SUPPORT DETAIL NOXELL FIXTURE
SCALE: 1/2" = 1'-0"

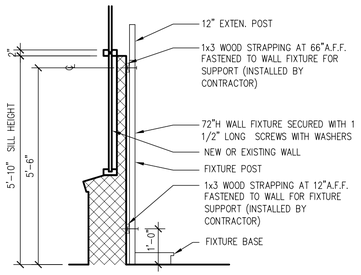

7 A-8.1 WALL UNIT SUPPORT DETAIL LOZIER FIXTURE
SCALE: 1/2" = 1'-0"

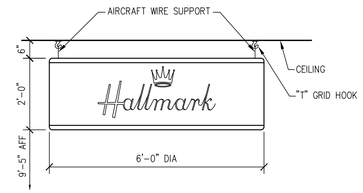

8 A-8.1 HALLMARK SIGNAGE DETAIL
SCALE: 1/2" = 1'-0"

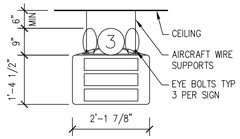

9 A-8.1 AISLE GUIDE SUSPENSION DETAIL
SCALE: 1/2" = 1'-0"

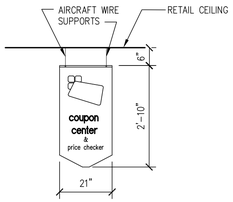

10 A-8.1 COUPON/ PRICE SIGNAGE DETAIL
SCALE: 1/2" = 1'-0"

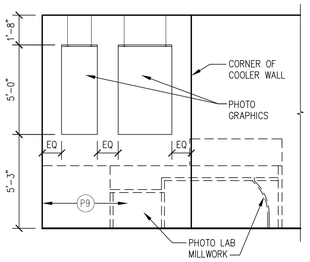

11 A-8.1 PHOTO LAB SIGNS
SCALE: 1/4" = 1'-0"

12 A-8.1 NOT USED
SCALE: 1" = 1'-0"

BKA Architects, Inc.
Architecture + Interiors
142 Crescent Street
Brockton, MA 02302
tel : 508.583.5603
fax : 508.584.2914
e-mail : bka@bkaarchs.com

CONSULTANT:

SEAL:

CVS/ pharmacy

NEW

STORE NUMBER: 329
NORTHGATE PLAZA
91 AUBURN STREET
PORTLAND, MAINE

DEVELOPER:
A & D REALTY, LLC
5 MILITIA DRIVE
LEXINGTON, MA 02421

REVISIONS:

DRAWING BY: RTK
DATE: 8/31/09
JOB NUMBER: 209017
TITLE: SIGNAGE DETAILS
SHEET NUMBER: A-8.1

COMMENTS:
ISSUED FOR CONSTRUCTION

Copyright © 2009 by BKA Architects, Inc. The architectural plans, drawings, designs, specifications and other arrangements on this sheet are and shall remain the property of BKA Architects, Inc. No print thereof shall be copied, disclosed to others, or used in connection with any work or project, other than the specified project for which they have been prepared and developed, without the express knowledge and written consent of BKA Architects, Inc.

P:\Retail_Proj\209017\CVS #329\Architectural\Sheets\209017_a81.dwg Sep 02 , 2009 - 9:27 am RKUHN