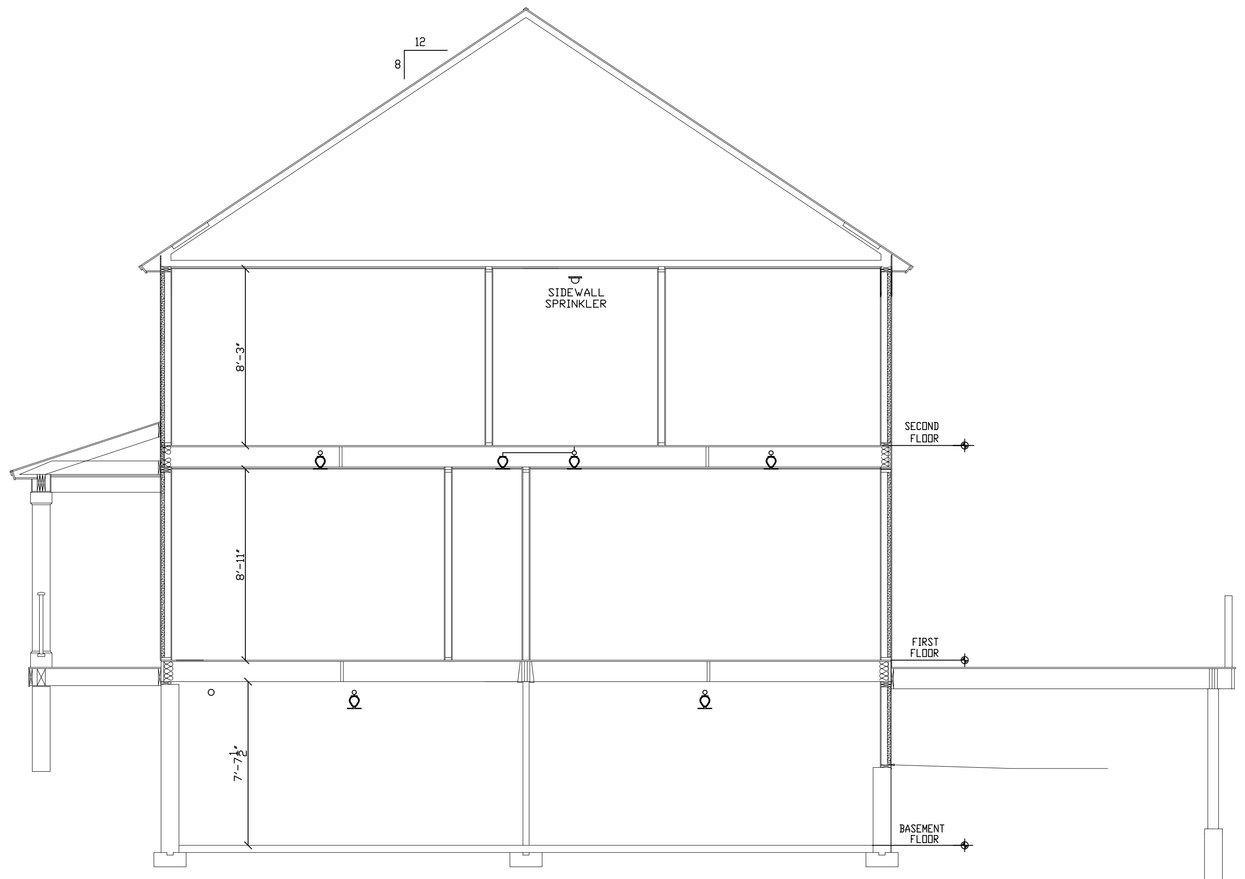

SECTION VIEW

SCALE: 1/4"=1'-0"

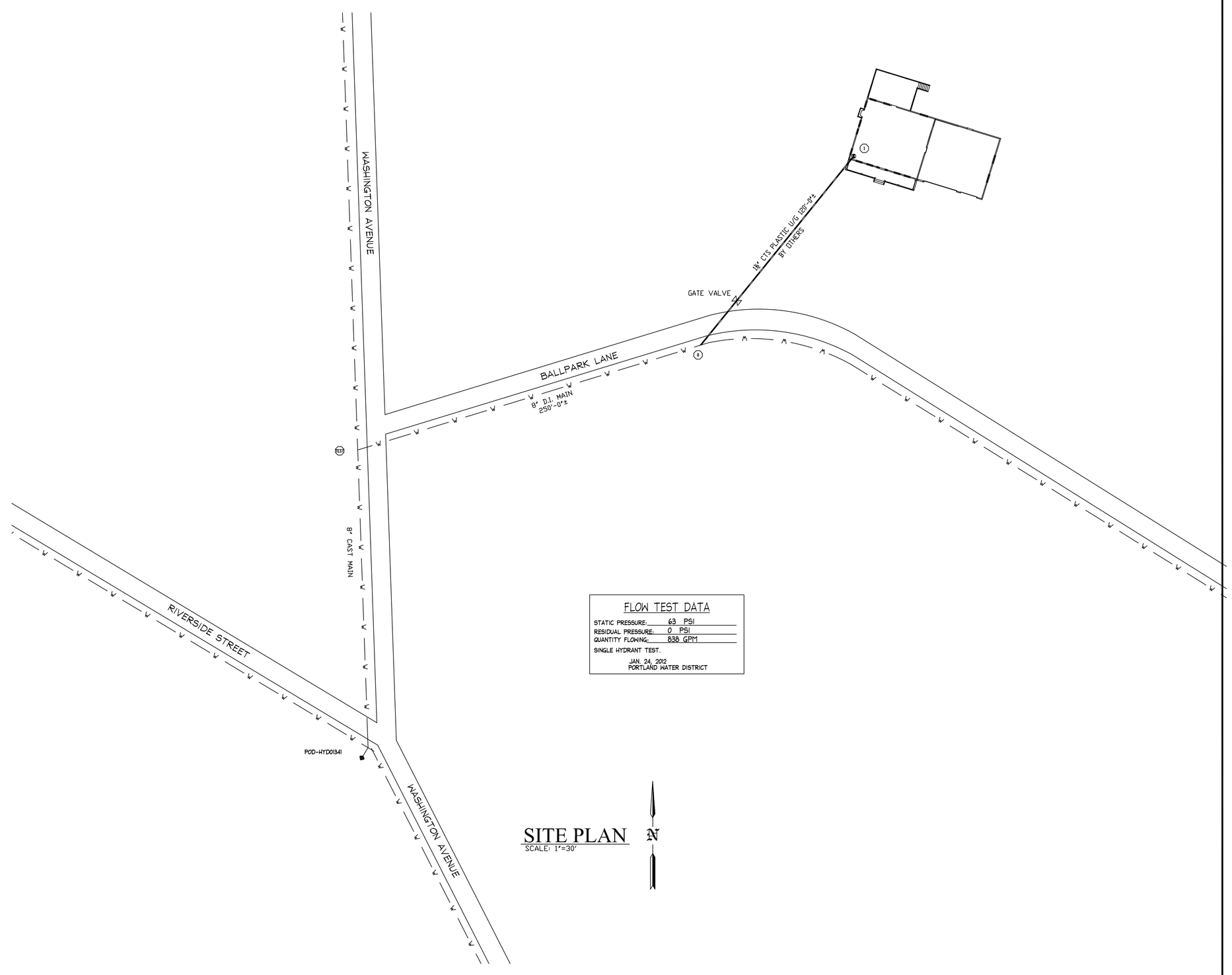

SITE PLAN

SCALE: 1"=30'

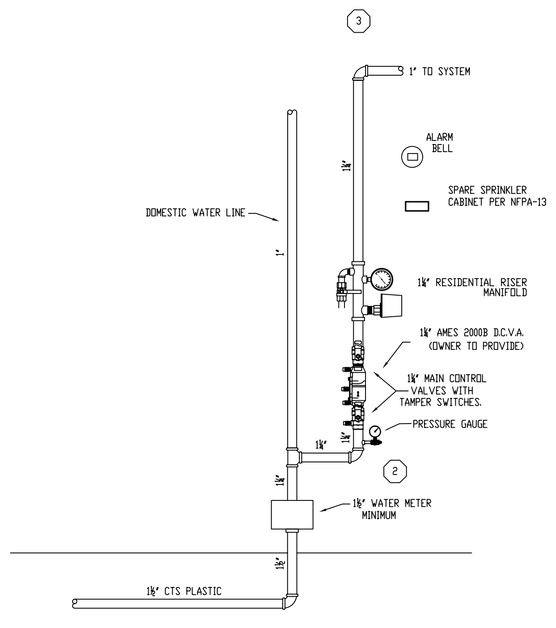

FIRE SPRINKLER RISER DETAIL

SCALE: N.T.S.

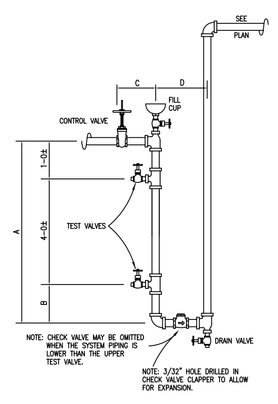

ANTIFREEZE LOOP DETAIL

(UNLESS BFP IS REQ'D. BY HEALTH DEPT.)

NOTE: SEE TRIM UNIT LITERTURE FOR MATERIAL REQUIRED.

LOOP SIZE	A	B	C	D	DRAIN VALVE
1	5-2½	0-3½	0-5	0-8	¾
1¼	5-2½	0-3½	0-5	0-8	¾
1½	5-4½	0-4½	0-6	0-10	¾
2	5-5	0-5	0-6½	0-11	¾
2½	5-5½	0-5½	1-0½	1-4½	1¼
3	5-6	0-6	1-1½	1-6½	1¼

** ANTI-FREEZE TYPE 50/50 FACTORY PREMIX.
** TOTAL CAPACITY OF ANTIFREEZE SYSTEM = 5 GALLONS

GENERAL NOTES

SYSTEM TO BE DESIGNED AND INSTALLED IN ACCORDANCE WITH NFPA-13D 2010.
PIPE AND FITTINGS TO BE COMBINATION OF BLACK STEEL SCH. 40 TYPE AND APPROVED BLAZEMASTER PLASTIC CPVC DESIGNED AND APPROVED TO BE USED WITH THIS STANDARD.
ALL HANGERS TO BE SPACED IN ACCORDANCE WITH MANUFACTURER'S RECOMMENDATIONS.
MAX SPACING OF RESIDENTIAL PENDANT SPRINKLERS (BASEMENT ONLY) TO BE 18'x18'.
MAX SPACING OF RESIDENTIAL PENDENT SPRINKLERS 1ST& 2ND FLOORS TO BE 16'x16'.
MAX SPACING OF RESIDENTIAL SIDEWALL SPRINKLERS 2ND FLOOR TO BE 14'x14'.
ALL WIRING OF DEVICES BY OTHERS.
SPARE SPRINKLERS OF EACH TYPE SHALL BE PROVIDED PER NFPA 13.

SPRINKLERS MAY BE OMITTED FROM THE FOLLOWING:

1) BATHROOMS WHERE THE AREA DOES NOT EXCEED 55 SQ. FT. AND THE WALLS AND CEILINGS, INCLUDING BEHIND FIXTURES, ARE OF NON COMBUSTIBLE OR LIMITED COMBUSTIBLE MATERIALS PROVIDING A 15 MINUTE THERMAL BARRIER.

2) CLOTHES CLOSETS, LINEN CLOSETS, AND PANTRIES WITHIN THE DWELLING UNITS WHERE THE AREA OF THE SPACE DOES NOT EXCEED 24 SQ. FT. AND THE LEAST DIMENSION DOES NOT EXCEED 3 FT. AND THE WALLS AND CEILINGS ARE SURFACED WITH NON COMBUSTIBLE OR LIMITED COMBUSTIBLE MATERIALS AS DEFINED BY NFPA.

3) ANY PORCHES, BALCONIES, CORRIDORS, AND STAIRS THAT ARE OPEN AND ATTACHED.

4) ATTICS, PENTHOUSE EQUIPMENT ROOMS, CRAWL SPACES, FLOOR/CEILING SPACES, ELEVATOR SHAFTS, AND OTHER CONCEALED SPACES THAT ARE NOT USED OR INTENDED FOR LIVING PURPOSES OR STORAGE.

MAINTENANCE OF THE SPRINKLER SYSTEM IS THE RESPONSIBILITY OF THE OWNER.
PROTECTION OF THE SPRINKLER SYSTEM (EXCLUDING ANTI-FREEZE PORTION) AGAINST FREEZING IS THE RESPONSIBILITY OF THE OWNER.

REVISIONS	NOTES

HEAD COUNT

SPRINKLER TYPE	IDENTIFICATION NO.	MFG.	ESC.	MODEL	FINISH	ORIFICE	TEMP.	SYMBOL	QUANT.
TOTAL SPRINKLERS THIS DRAWING									

STANDARD SYMBOLS

- POST INDICATOR VALVE
- KEY VALVE
- FIRE HYDRANT
- FIRE DEPT. CONNECTION
- O.S. & Y GATE VALVE
- SWING CHECK VALVE
- NEW UNDERGROUND
- EXIST UNDERGROUND

STANDARD SYMBOLS

- ALARM CHECK VALVE
- RISER W/ALARM VALVE
- RISER W/DRY VALVE
- RISER W/ELEC. FLOW SWITCH
- RISER W/DELUGE VALVE
- WATER MOTOR BELL
- ELECTRIC BELL
- FLUSH FIRE DEPT. CONNECTION

INSPECTIONS	
1.	
2.	
3.	
4.	
5.	
RESPONSIBLE MANAGING SUPERVISOR #348	
CONTRACTOR LICENSE #295	

RICK HOLDEN RESIDENCE
20 BALLPARK LANE
PORTLAND, MAINE 04103

FIRE PROTECTION PLAN

FREEDOM FIRE PROTECTION, INC.
209 QUAKER RIDGE ROAD
CASCO, MAINE 04015

JOB No.	M0070
DATE	4/20/12
DRAWN BY	MJN
SCALE	AS NOTED
SHEET No.	FP-1of2