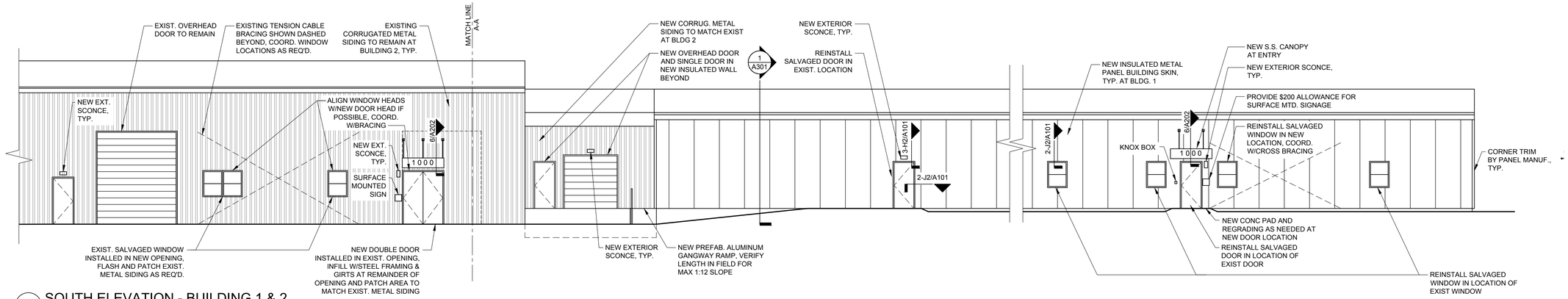

1 SOUTH ELEVATION - BUILDING 1 & 2
SCALE: 1/8" = 1'-0"

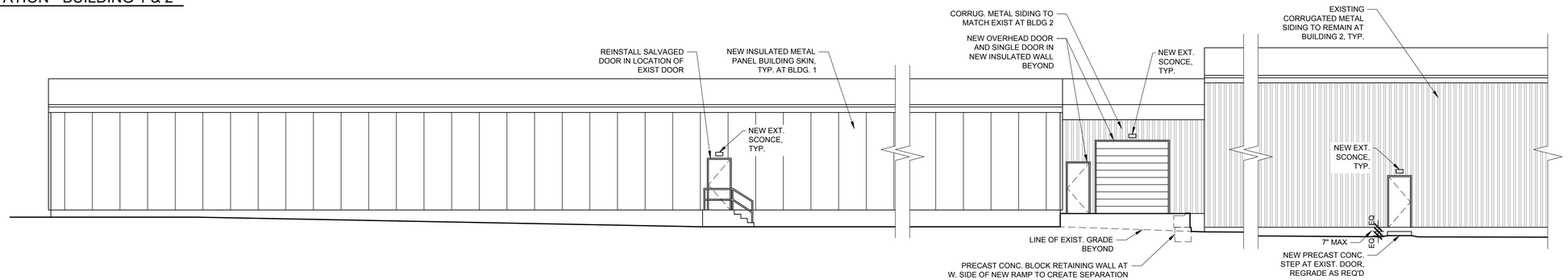

2 NORTH ELEVATION - BUILDING 1 & 2
SCALE: 1/8" = 1'-0"

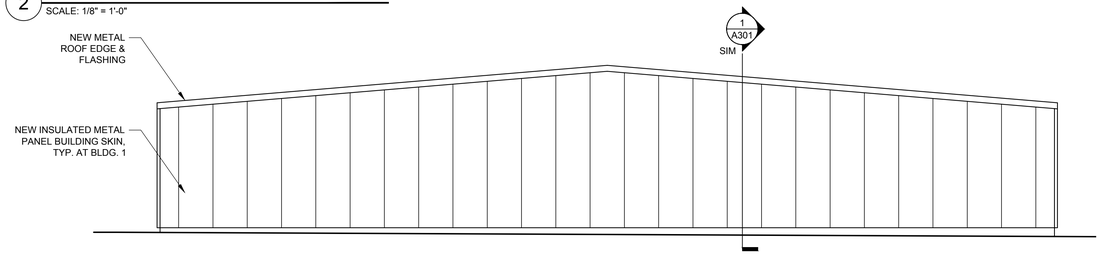

3 EAST ELEVATION - BUILDING 1
SCALE: 1/8" = 1'-0"

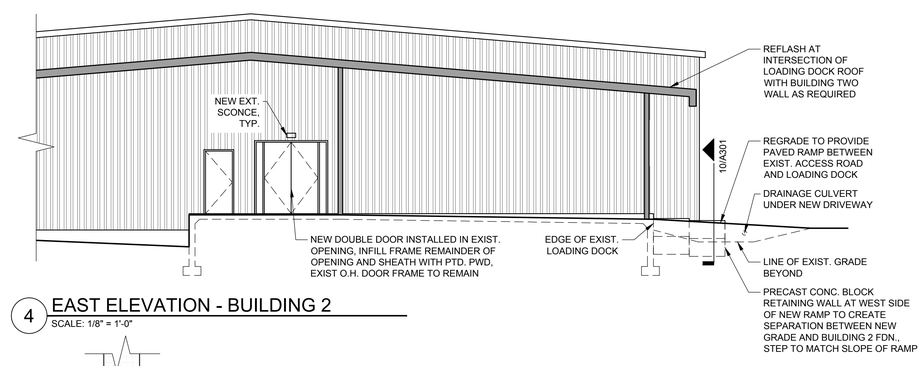

4 EAST ELEVATION - BUILDING 2
SCALE: 1/8" = 1'-0"

GENERAL ELEVATION NOTES:

1. PATCH AND REPAIR EXISTING CORRUGATED METAL SIDING ON BUILDING 2 AS REQ'D.
2. ALL WINDOWS AND DOORS SHOWN IN APPROXIMATE LOCATION AND AT APPROXIMATE SIZES FOR DIAGRAMMATIC PURPOSES. VERIFY ALL LOCATIONS AND DIMENSIONS IN FIELD AS REQ'D FOR RENOVATION WORK.
3. ADD NEW LIGHTING AT ALL EXIT DOORS AS REQ'D BY CODE.

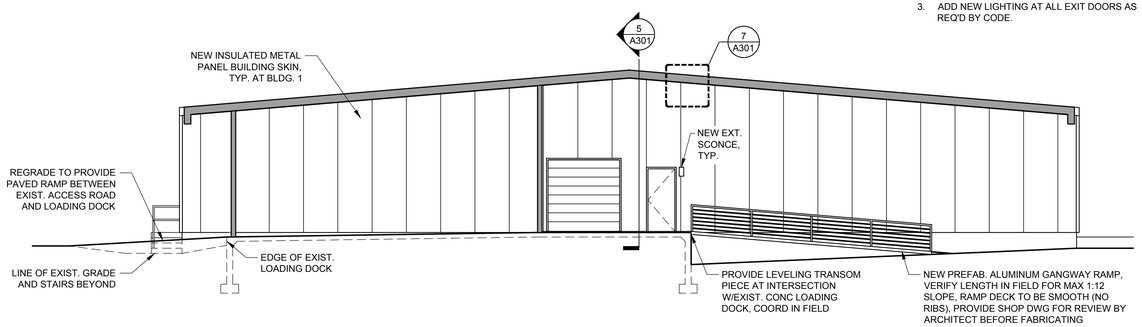

5 WEST ELEVATION - BUILDING 1
SCALE: 1/8" = 1'-0"

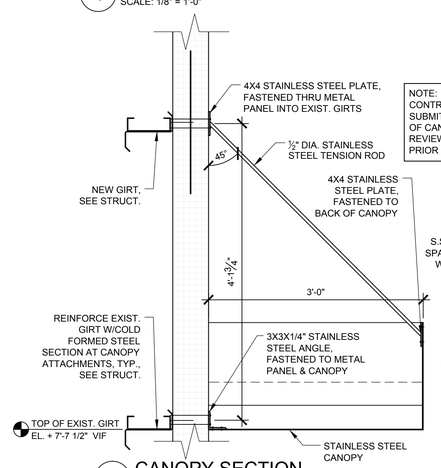

NOTE:
CONTRACTOR TO SUBMIT SHOP DRAWING OF CANOPIES FOR REVIEW BY ARCHITECT PRIOR TO FABRICATION

6 CANOPY SECTION
SCALE: 1" = 1'-0"

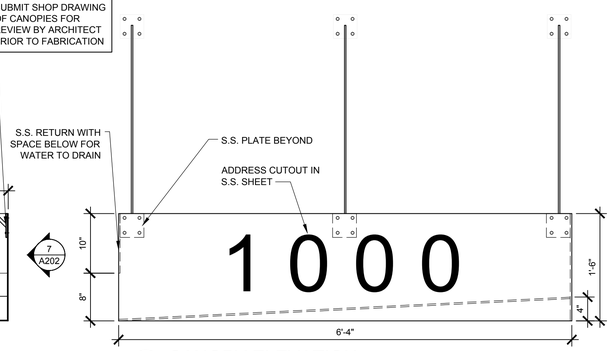

7 CANOPY ELEVATION
SCALE: 1" = 1'-0"

Scott Simons Architects
75 York Street, Portland, Maine 04101
www.simonsarchitects.com
207.772.4656

PROJECT NAME:
1000 RIVERSIDE

RENOVATIONS
PORTLAND, MAINE

SEAL:

LICENSED ARCHITECT
SCOTT R. SIMONS
NO. 2034
STATE OF MAINE

THIS DRAWING IS THE PROPERTY OF SCOTT SIMONS ARCHITECTS (SSA) AND IS NOT TO BE COPIED OR REPRODUCED IN PART OR WHOLE.
2012 © SCOTT SIMONS ARCHITECTS, LLC

REVISION:

DATE OF ISSUE:	NOVEMBER 20, 2013
PROJECT NUMBER:	2013-0190 1000 RIVERSIDE
STATUS:	ISSUE FOR CONSTRUCTION

ELEVATIONS

A202