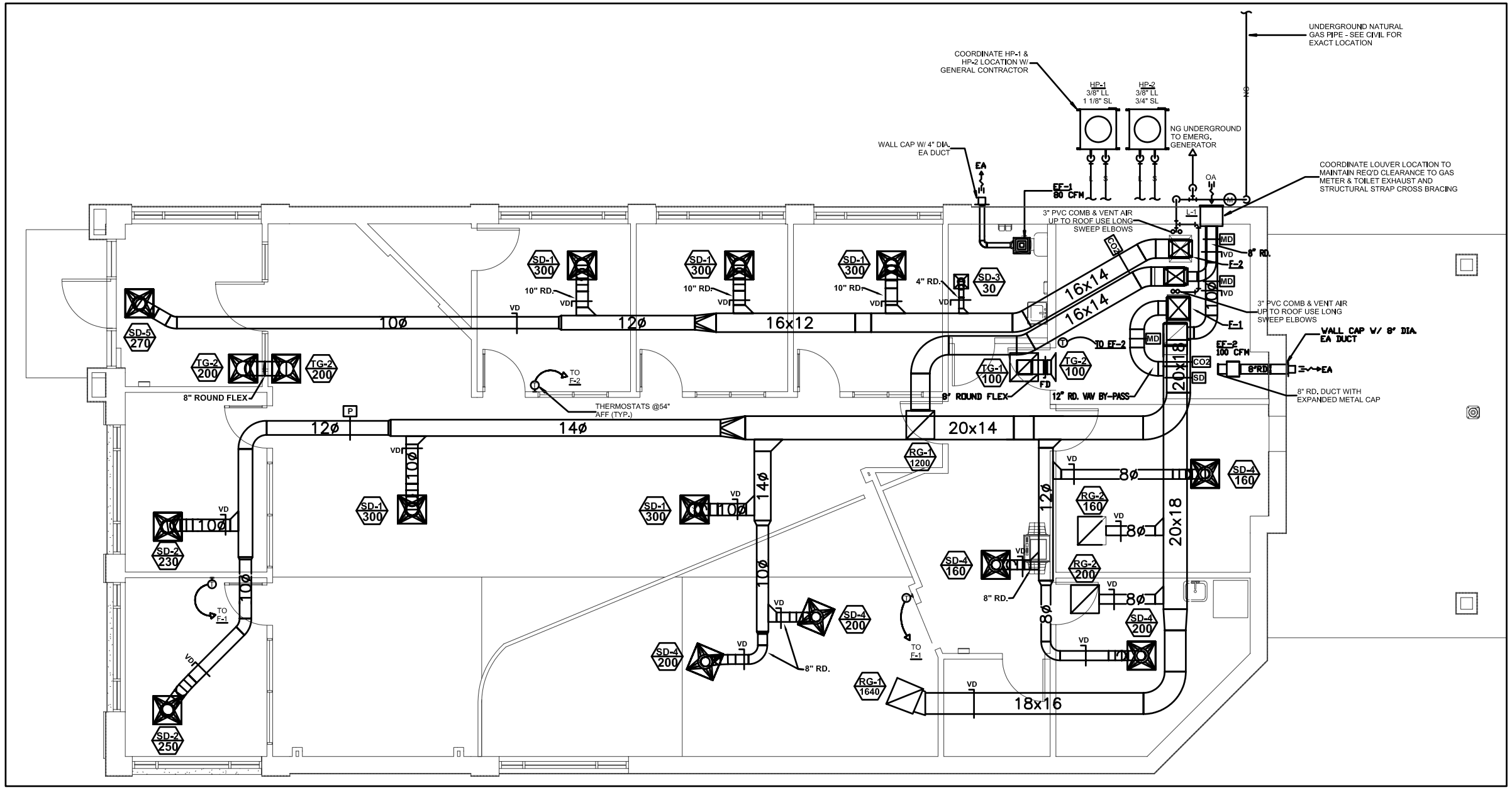

FIRST FLOOR MECHANICAL PLAN

SCALE: 1/4"=1'0

RD&G SCHEDULE

Tag	Manufacturer	Price Model	Neck Size (in)	Throw	CFM Range	Noise Criteria	Delta P (in.)	Style
SD-1	Price	SPD	10	3-5-9	300	<20	.06	24 x 24 Lay-in with 10" neck
SD-2	Price	VPD-HC	10	3-4-8	230-250	<20	.045	24 x 24 Lay-in with 10" neck
SD-3	Price	SPD	4	-2-4	30	<20	.017	12 x 12 lay-in with 4" Neck; Set up for 3 way blow
SD-4	Price	SPD	8	2-4-7	160-200	<20	.042	24 x 24 Lay-in with 8" neck
SD-5	Price	SPD	10	3-4-8	270	<20	.045	24 x 24 Surface Mount; Set up for 3 way blow
RG-1	Price	530	22x22	--	1200-1640	<20	.04	Lay-in
RG-2	Price	530	10x10	--	160-200	<20	.01	Lay-in
TG-1	Price	530	10x10	--	100	<20	.002	Lay-in
TG-2	Price	530	10x10	--	100-200	<20	.01	Surface Mount

LOUVER SCHEDULE

TAG	MANUFACTURER	MODEL	SERVICE	WIDTH	HEIGHT	CFM	FREE AREA SQ FT	FPM	NOTES
L-1	Ruskin	ELF6375DX	F-1 & F-2 O.A.	18	24	370	1.38	268	Painted, Drainable

EXHAUST FAN SCHEDULE

TAG	Service	Manufacturer	Model Number	Volume CFM	SP (in. wg.)	Speed (rpm)	Amps	Electric V/Ph/Hz	Notes
EF-1	Bathroom Exhaust	Panasonic	FV-08VKM2	80	0.25	926	0.11	120/1/60	
EF-2	Mechanical Room	Fantech	FG-4XL	100	0.8	2750	0.66	120/1/60	

HEAT PUMP SCHEDULE

TAG	MANUFACTURER	MODEL NUMBER	SERVICE	NOMINAL TONS	COOLING OUTPUT CAPACITY (MBh)	HEATING OUTPUT CAPACITY (MBh) High / Low	SEER	EER	HSPF	V-Hz-Ph	MCA/MAX FUSE (AMPS)	REFRIGERANT	REFRIGERANT LINE SIZES	INDOOR CASED COIL MODEL	NOTES
HP-1	BRYANT	215BNA060000	F-1	5	56.7	57.1 / 33.0	14	11.8	8.3	208/230-60-1	34.2 / 50	Puron	1-1/8 - 3/8	CNPVP6124ATA	
HP-2	BRYANT	215BNA036000	F-2	3	34	34.3 / 18.9	14.5	12	8.2	208/230-60-1	22.1 / 35	Puron	3/4 - 3/8	CNPVP4221ATA	

FURNACE SCHEDULE

Tag	Manufacturer	Model	Input (MBH) Min / Max	Output (MBH) Min / Max	AFUE - Efficiency %	Maximum CFM	ESP	Weight (lbs.)	ELECTRICAL V / PH / HZ / MCA / MFS	FILTER SIZE (QTY) SIZE X THICKNESS	Gas Connection (in.)	Vent Pipe Size (in.)	Design Outside Air (CFM)	Gas Regulator Model	NOTES
F-1	BRYANT	355CAV060120	48 / 120	46 / 112	95	2060	0.5	234	115 / 1 / 60 / 14.06 / 20	(1) 24 X 25 X 3/4	1/2	3	300	N/A	Use long sweep elbows on vent and combustion air piping
F-2	BRYANT	355CAV060100	40 / 100	38 / 94	95	1950	0.5	203	115 / 1 / 60 / 14.06 / 20	(1) 20 X 25 X 3/4	1/2	3	70	N/A	Use long sweep elbows on vent and combustion air piping

NOTE:
MAINTAIN MINIMUM 3' CLEAR TO DOORS & WINDOWS & 5' CLEAR TO SOURCES OF IGNITION.

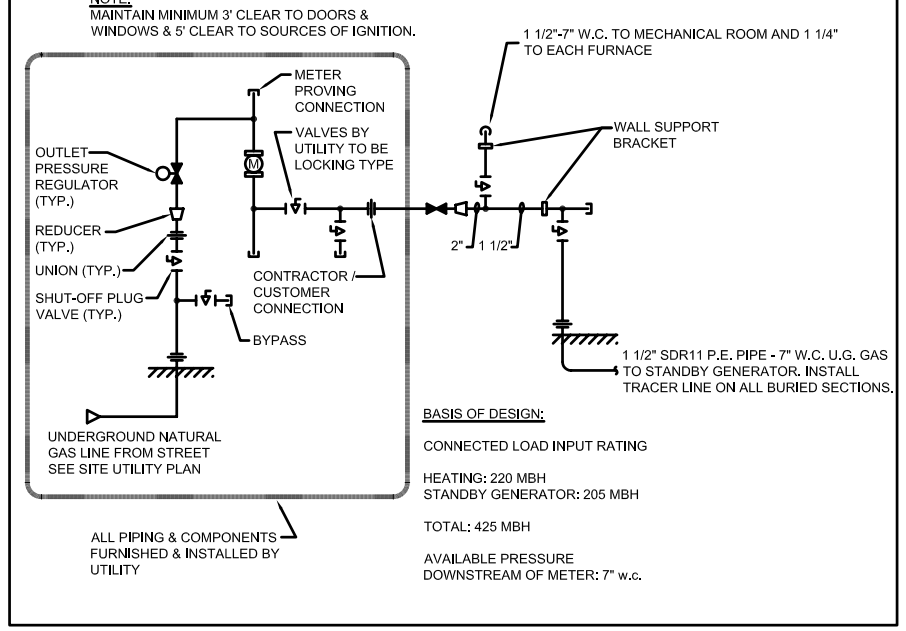

BASIS OF DESIGN:

CONNECTED LOAD INPUT RATING

HEATING: 220 MBH
STANDBY GENERATOR: 205 MBH

TOTAL: 425 MBH

AVAILABLE PRESSURE DOWNSTREAM OF METER: 7" w.c.

GAS PIPING DETAIL

NTS

THESE DRAWINGS AND PLANS ARE THE PROPERTY OF WH DEMMONS INC. AND ARE AN INSTRUMENT OF SERVICE FOR THE OWNER'S USE FOR THIS PROJECT ON THIS SITE ONLY

W.H.DEMMONS INC.
Maine Air Conditioning
Portland Sheet Metal
Demmons Roofing

FOR REVIEW

BANGOR SAVINGS BANK
ALLEN AVENUE
PORTLAND, ME.

FIRST FLOOR MECHANICAL PLAN

PROJECT NUMBER:	49368
ISSUED:	10/15/2010
DRAWN BY:	JLR/MGR
CHECKED BY:	DWM
FILENAME:	

M-1