ROOF EQUIPMENT POWER CONNECTION/INTERCONNECTING CABLE DETAIL (PENETRATING ROOF MOUNT)

NOTES:

1. DIU/O CABLE FURNISHED BY WALGREEN AND INSTALLED BY THE ELECTRICAL CONTRACTOR.
2. NOT USED
3. NOT USED
4. VERIFY EXACT ANTENNA AIMING DIRECTION PRIOR TO INSTALLING CONDUIT ARRANGEMENT AS SHOWN. CONSULT WITH WALGREENS FOR EXACT LOCATION OF ROOF OPENING. SEE ORIENTATION DETAIL 4/E4.2.

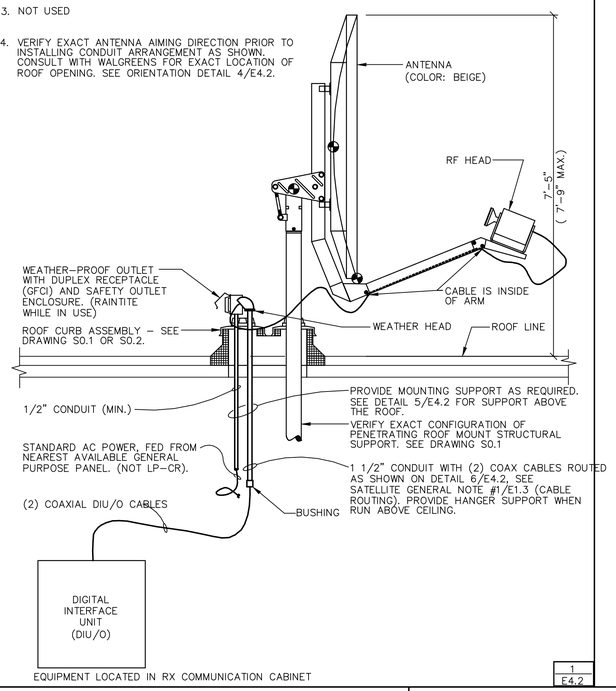

EQUIPMENT LOCATED IN RX COMMUNICATION CABINET

1 / E4.2

SATELLITE ANTENNA WORK RESPONSIBILITIES

NEW STORE – TURNKEY PROJECT WITH ANTENNA INSTALLATION

NOTES:

1. STRUCTURAL MOUNT BY LANDLORD'S CONTRACTOR
2. ELECTRICAL (ROUGH-IN) CLEAN POWER BY LANDLORD'S CONTRACTOR.
3. ELECTRICAL (ROUGH-IN) POWER BY LANDLORD'S CONTRACTOR.
4. ELECTRICAL (ROUGH-IN) PROVISIONS (INCLUDING COAXIAL DIU/O CABLE) BY LANDLORD'S CONTRACTOR.
5. INSTALLATION AND FINAL CONNECTIONS OF ANTENNA PROPER BY WALGREENS DATA TERMINAL REPAIR (DTR).

MOESER & ASSOCIATES
206 AYER ROAD HARVARD, MA 978-456-6905
ARCHITECT

DRAWINGS/SPECIFICATIONS BY:
- ☐ WALGREENS'
- ■ LANDLORD'S CONSULTANT

ALL CONSTRUCTION WORK, UNLESS NOTED OTHERWISE, BY:
- ☐ WALGREENS' CONTRACTOR
- ■ LANDLORD'S CONTRACTOR (TURNKEY CONSTRUCTION)

STORE	BUILDING
NEW . . . . . ■	NEW . . . . . ■
REMODELING . . . . . ☐	EXISTING . . . . . ☐
RELOCATION . . . . . ☐	NEW SHELL ONLY . . ☐
OTHERS . . . . . ☐	

ANTENNA EQUIPMENT ORIENTATION DETAIL

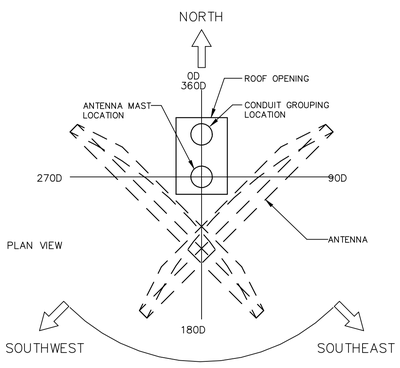

UNOBSTRUCTED POINTING DIRECTION. EXACT AIMING ANGLE TO BE DETERMINED PER LOCATION.

NOTE:

CONDUIT GROUP OPENING MUST ALWAYS BE ORIENTED TO THE NORTH OF THE ANTENNA PIPE SUPPORT TO AVOID CONFLICT WITH THE ANTENNA. THE ANTENNA MUST HAVE AN UNOBSTRUCTED POINTING DIRECTION FROM SOUTHEAST TO SOUTHWEST.

SELECT AREA AND THEIR CORRESPONDING APPROXIMATE ORIENTATION ANGLE (VERIFY EXACT AIMING ANGLE FOR EACH LOCATION).

	AZIMUTH (ANGLE AS SHOWN ABOVE)	ELEVATION
CHICAGO	187	42
DENVER	161	43
HOUSTON	174	56
MIAMI	207	58
MINNEAPOLIS	180	38
NY/CONNECTICUT	208	40
PHOENIX	146	46
SAN FRANCISCO	136	37
ST. LOUIS	183	46

4 / E4.2

CONDUIT GROUPING MOUNTING SUPPORT DETAIL

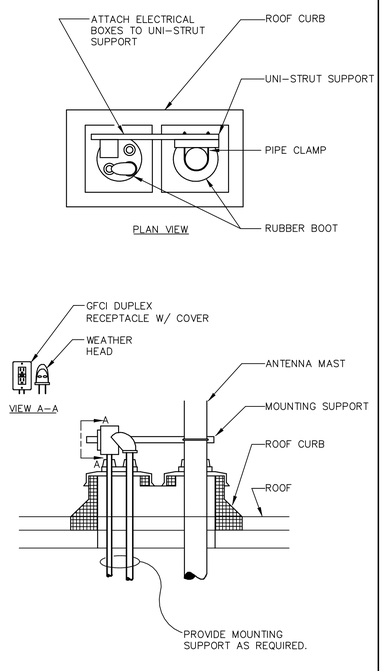

5 / E4.2

SATELLITE ANTENNA SYSTEM

NOTES:

1. SEE THE FOLLOWING DETAILS FOR EQUIPMENT POWER CONNECTION (DEPENDENT UPON MOUNTING TYPE): VERIFY ACTUAL SATELLITE ANTENNA MOUNTING CONFIGURATION. DETAIL 1/E4.2 – PENETRATING ROOF MOUNT.
2. SEE ROUTING NOTES AND DETAIL 1/E4.2 FOR INFORMATION ON INTERCONNECTING CABLES. (LOW ENERGY)
3. THE FOLLOWING EQUIPMENT TO BE FURNISHED BY WALGREENS: ANTENNA, DIU/O, RF HEAD, RECEIVER/DESCRAMBLER, VIDEO SYSTEM (FUTURE).
4. ONE (1) 20A.120V.1PH CIRCUIT FROM PANEL "LP-CR". PROVIDE TWO (2) STRAIGHT-BLADE DUPLEX RECPTACLES (PASS & SEYMOUR #8200-ISP) TRANSIENT VOLTAGE SURGE SUPPRESSORS.

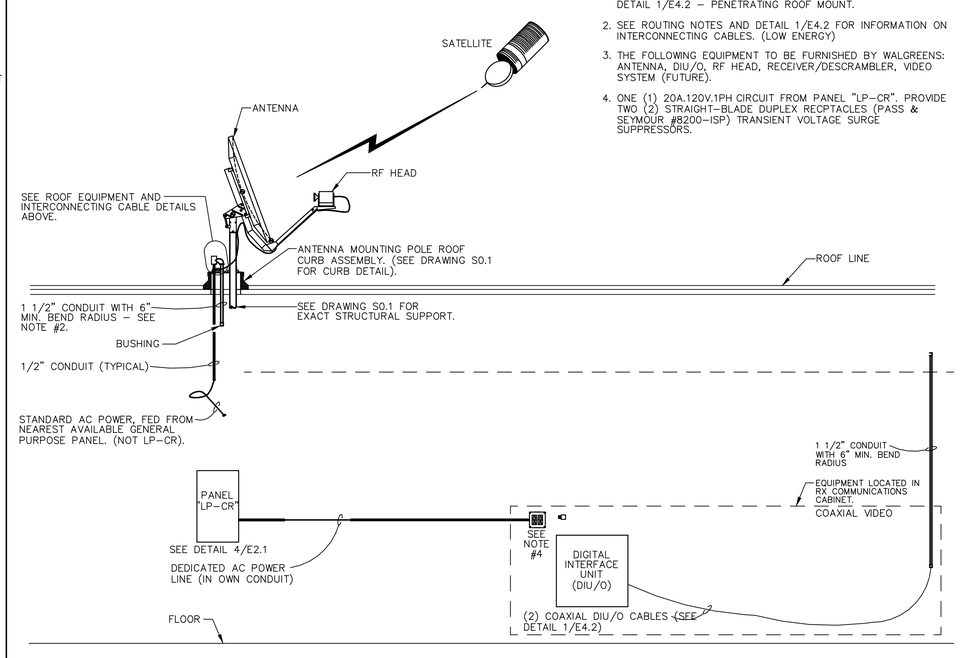

6 / E4.2

NO.	DATE	BY	DESCRIPTION	CONST

REVISIONS

CERTIFICATION AND SEAL

I HEREBY CERTIFY THAT THIS PLAN AND SPECIFICATION WAS PREPARED BY ME OR UNDER MY DIRECT SUPERVISION AND THAT I AM A DULY REGISTERED ARCHITECT OR ENGINEER UNDER THE LAWS OF THE STATE OF MAINE AS SIGNIFIED BY MY HAND AND SEAL.

FISCAL 2007 CRITERIA - STORE #12326

WALGREENS
(NWC) WASHINGTON & ALLEN AVES.
PORTLAND, MAINE

DRAWING TITLE

SATELLITE SYSTEM DETAILS

CADD PLOT:	SCALE: AS NOTED	DRAWING NO.
VOID PLOT:	DRAWN BY: TD	**E4.2**
RELEASED TO CONSTRUCTION	DATE: 3-26-09	
	REVIEWED BY: SAM	