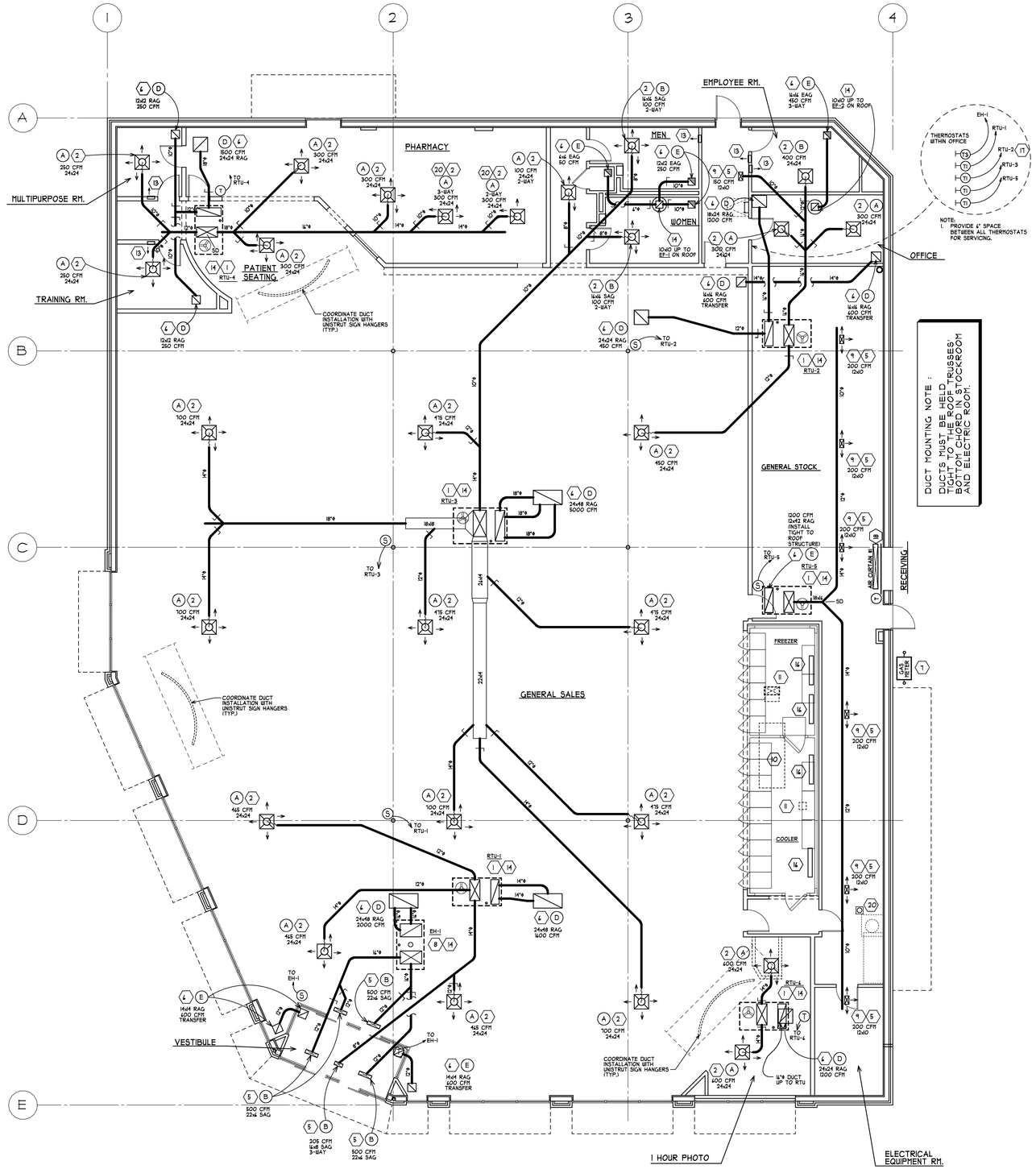


HVAC FIRST FLOOR PLAN

SCALE: 1/8"=1'-0"

## NOTES

### GENERAL:

1.1 REFER TO ALL OTHER PROJECTS AND SPECIFICATIONS FOR ADDITIONAL WORK OR CLARIFICATIONS.

1.2 IN AREAS WITHOUT A FINISHED CEILING, MECHANICAL PIPING AND DUCT WORK SHALL NOT BE LOWER THAN 15 FT. COORDINATE LOCATION WITH STOCK ROOM SHELVING AND LIGHTING.P
1.3 NON–HVAC COMPRESSORS AND CONDENSERS SHALL BE FURNISHED BY WALGREENS.

### EQUIPMENT:

2.1 SEE ARCHITECTURAL DRAWINGS FOR HVAC ROOF CURB, ROOF COMPRESSOR CURB, PIPE PORTALS AND SUPPORT DETAILS.

2.2 INSTALL HVAC UNITS LEVEL ON ROOF CURBS.

2.3 OUTSIDE AIR INTAKE ON ROOF SHALL BE LOCATED A MINIMUM OF 15'–0" AWAY FROM ANY EXHAUST DUCT, BLWER DISCHARGE, PLUMBING VENTS, ETC.

2.4 HVAC UNITS TO INCLUDE FLEXIBLE CONNECTIONS.

2.5 OUTSIDE AIR INTAKE TO BE SIZED FOR 100% OF OUTSIDE AIR WHEN AN ECONOMIZER SYSTEM IS PROVIDED.

2.6 ALL OUTSIDE AND RETURN AIR DAMPERS FOR ECONOMIZER AND NON–ECONOMIZER UNITS SHALL BE MOTORIZED AND HAVE A LOW LEAK GASKET.

2.7 PROVIDE LAMINATED BAKELITE NAME PLATES ON EACH HVAC UNIT AND LOCATE NEXT TO UNIT NAME TAG (RTU–1, ER–1, EF–1, ETC.).

2.8 IMMEDIATELY AFTER AN HVAC UNIT IS INSTALLED, PROVIDE A MERV 8 R BETTER TEMPORARY AIR FILTER OVER THE RETURN AIR INLET OF EACH HVAC UNIT AND/OR EACH RETURN AIR GRILLE AS APPLICABLE. REMOVE ONLY AFTER CONSTRUCTION IS COMPLETE.

### CONDENSATE DRAIN SYSTEM:

3.1 FOR ALL GEOGRAPHICAL LOCATIONS, PROVIDE COSTGARD DEVICE SYSTEM KIT ON EACH RTU, MANUFACTURED BY TRENT TECHNOLOGIES, INC. TYLER TEXAS, TELEPHONE # (903) 509–4843. PIPE AND FITTINGS SHALL BE UV STABILIZED RECOGNIZED BY UL AS SUITABLE FOR OUTDOOR USE.

3.2 FOR LOCATIONS WEST OF 99 DEG. LONGITUDE OR NORTH OF 33 DEG. LATITUDE, RUN CONDENSATE PIPING 8 INCHES BEYOND THE ROOF CURB AND DISCHARGE IN THE DIRECTION OF THE ROOF PITCH. LOCATE DISCHARGE SO THAT CONDENSATE RUNS AWAY FROM RTU. REFER TO ARCHITECTURALDRAWING (A1.3) FOR THE REQUIRED "SPLASH BLOCK ON WALKWAY PAD BELOW WATER DISCHARGE".

3.3 NOT USED

3.4 RUN CONDENSATE PIPING BELOW THE ROOF IF CODE OR LOCAL AUTHORITIES PROHIBIT PIPING ABOVE THE ROOF OR IF DISCHARGING ONTO THE ROOF IS NOT ALLOWED. USE A PORTAL PLUS PIPE PORTAL TO PENETRATE THE ROOF. PROVIDE A HIGHER THAN NORMAL ROOF CURB TO RAISE THE RTU HIGH ENOUGH TO MAKE THIS SCHEME WORK.

3.5 TRANE UNITS ARE NOT DELIVERED WITH RAIN CONNECTIONS IN THE BOTTOM ON THE DRAIN PAN. DRAIN CONNECTIONS FOR THESE UNITS MUST BE MADE IN THE FIELD. DETAILED INSTALLATION INSTRUCTIONS ARE PROVIDED WITH EACH SHIPMENT OF COSTGARD DRAIN SEAL.

3.6 PROVIDE CONDENSATE PIPING, DRAINAGE FITTINGS AN CLEANOUTS WITH A MINIMUM SIZE OF 1.25 INCH. PROVIDE SCHEDULE 40 MIN. PVC OR ABS UNLESS CODE REQUIRES OTHERWISE. CONDENSATE PIPING AND COMPONENTS LOCATED OUTSIDE THE BUILDING SHALL BE WEATHER, SUNLIGHT, AND UV RESISTANT.

3.7 LOCATE CONDENSATE DRAIN PIPNG SO IT WILL NOT INTERFERE WITH THE REQUIRED ACCESS TO THE RTUs.

3.8 INSULATE ALL CONDENSATE DRAIN PIPING INSIDE THE BUILDING TO INCLUDE MAINS, BRANCHES, VENTS AND COSTGARD.

### AIR DISTRIBUTION:

4.1 DUCTWORK TO BE GALVANIZED SHEET METAL SPIRAL PER SMACNA. REFER TO SPECIFICATION 15880. LINED DUCTWORK IS NOT PERMITTED.

4.2 PROVIDE FIRE DAMPERS WITH ACCESS PANELS PER LOCAL CODE AND AS NOTED.

4.3 FLEXIBLE DUCT LENGTH SHALL NOT EXCEED 3'–0". US ONLY ON FINAL SUPPLY AIR DIFFUSER, AND FROM THE RETURN AIR GRILLE TO THE METAL DUCTWORK. FOR BOTH CASES, 90 TURNS ARE NOT ALLOWED – OFFSET ANGLES SHALL BE KEPT TO A MINIMUM. SEE DETAIL 3/M2.1.

4.4 DO NOT INSTALL SUPPLY AIR DIFFUSERS IN CEILING PANEL ADJACENT TO A ROW OF LIGHT FIXTURES. LOCATE DIFFUSERS IN ACCORDANCE WITH THE REFLECTED CEILING PLAN SHOWN ON THE ARCHITECTURAL DRAWING.

4.5 PAINT THE INTERIOR SURFACE OF DUCTS (WHERE VISIBLE) THROUGH GRILLES, DIFFUSERS ETC. USE FLAT 'DTM' (DIRECT TO METL), NON–SPECULAR BLACK PAINT.

4.6 SUPPLY AND/OR RETURN AIR CEILING PLENUMS ARE NOT PERMITTED.

4.7 ALL VOLUME DAMPERS SHALL BE FLAGGED WITH STREAMERS FOR EASY IDENTIFICATION ESPECIALLY WHEN COVERED WITH INSULATION.

4.8 AIR BALANCING :BALANCE AIR T INDICATED QUANTITIES WITHIN A TOLERANCE OF PLUS OR MINUS 10%.

### MISCELLANEOUS:

5.1 ELECTRIC WALL HEATERS (EWH) ARE PROVIDED UNDER THE ELECTRICAL CONTRACT. THEY ARE SHOWN HERE FOR INFORMATION ONLY.

5.2 DO NOT INSTALL EQUIPMENT, DUCTWORK, PIPE, CONDUIT IN PROXIMITY TO THE ROOF HATCH LADDER AREA.

### HVAC CONTROLS:

6.1 REFER TO DRAWING M2.2.

## MECHANICAL KEYED NOTES

1. HVAC ROOF–TOP UNIT. SEE GENERAL NOTES AND SCHEDULE ON DRAWING M2.2 FOR ADDITIONAL INFORMATION.
2. S.A.D., CFM AND SIZE AS NOTED. FOUR WAY UNLESS OTHERWISE NOTED.
3. LOCATE RAG OVER COMMUNICATION CABINET.
4. INSTALL FIRE DAMPER AND ACCESS DOOR PER LOCAL CODE.
5. S.A.G.,CFM AND SIZE AS NOTED.
6. E.A.G. & R.A.G.,T.A.G,. CFM AND SIZE AS NOTED.
7. GAS SERVICE, METER, REGULATOR, AND VALVES. PHYSICAL PROTECTION OF EQUIPMENT BY GENERAL CONTRACTOR.
8. ROOF–TOP ENCLOSED BLOWER/ENTRANCE HEATER. INCLUDE FLEXIBLE CONNECTIONS, 100% RETURN AIR (NO OUTSIDE AIR) WITH SENSOR AT ENTRANCE AND THERMOSTAT IN OFFICE.
9. MOUNT REGISTERS ON SPIRAL DUCTWORK. REGISTERS SHALL HAVE DAMPER AND SHALL BE INSTALLED SO THAT THE AIR SUPPLY IS DIRECTED DOWNWARD AT AN ANGLE, SHOWN ON DETAIL 2/M2.1.
10. ROOF–TOP CONDENSING UNIT FOR WALK–IN COOLER/FREEZER. REFER TO ARCITECTURAL DWG.
11. PIPE PORTAL FOR WALK–IN/COOLER/FREEZER CONDENSING UNIT REFRIGERANT AND ELECTRICAL LINES.
12. AFTER AIR BALANCE OF RTU–2, SECURE RETURN DAMPER POSITION WITH SCREW(S).
13. ELECTRIC WALL HEATER (EWH) FURNISHED BY ELECTRICAL CONTRACTOR. SEE DRAWING E1.2 FOR MORE INFORMATION.
14. PIPE PORTAL FOR GAS LINES TO AN HVAC UNITS ON THE ROOF. REFER TO ARCHITECTURAL DWGS.A1.3 AND A1.4. PROVIDE AN ACCESSIBLE ISOLATION VALVE, PIPE UNION DOWNSTREAM OF VALVE AND DIRT LEG OUTSIDE EACH HVAC UNIT IN ACCORDANCE WITH THE FUEL GAS CODES. DO NOT ROUTE GAS LINE THRU BOTTOM OR SIDE OF ROOF CURB.
15. ~~INSTALL S.A.G. IN CENTER OF CEILING TILE CLOSEST TO WINDOW CENTER. ADJUST FRONT HORIZONTAL BARS TO AN ANGLE OF 45 SO THAT THE AIR FLOWS AWAY FROM THE WINDOW. THIS IS TO HELP PREVENT CONDENSATION ON THE GLASS IN HOT, HUMID CLIMATE CONDITIONS.~~
16. EVAPORATIVE UNIT. (FAN COIL) PROVIDE DX PIPING CONNECTION WITH ROOFTOP CONDENSING UNIT.
17. ON INITIAL SETUP, THE SENSOR WITHIN THE THERMOSTAT FOR RTU–2 SHALL BE CONTROLLER. RETAIN THE REMOTE SENSOR FOR A FUTURE OPTION.
18. OVERHEAD DOOR AIR CURTAIN, WALL MOUNTED AND SUPPORTED FROM BAR–JOIST. POSITION TO CLEAR THE DOOR AND INSTALL PER MANUFACTURER'S DIRECTION. SEE ARCHITECTURAL DRAWINGS FOR DETAILS.
19. ~~IF ELECTRICAL ROOM CONTAINS UPS OR TRANSFORMER, PROVIDE TRANSFER FAN WITH THERMOSTAT DISCHARGING TO THE SALES AREA AND PROVIDE MAKEUP AIR RELIEF PER HVAC LOAD CALCULATION.~~
20. PROVIDE AIR EXHAUST THRU ROOF FOR GAS FIRED WATER HEATER (IF APPLICABLE). SEE SHEET P1.1, DETAILS 2/P2.1 & 6A/P2.1. PROVIDED BY PLUMBING CONTRACTOR.

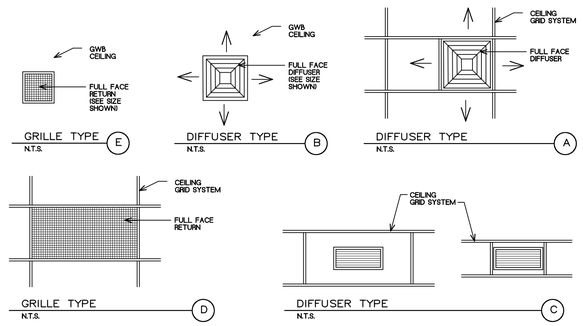



MOESER & ASSOCIATES
206 AYER ROAD HARVARD, MA 978-456-6905
ARCHITECT


DRAWINGS/SPECIFICATIONS BY:
☐ WALGREENS'
■ LANDLORD'S CONSULTANT

ALL CONSTRUCTION WORK, UNLESS NOTED OTHERWISE, BY:
☐ WALGREENS' CONTRACTOR
■ LANDLORD'S CONTRACTOR (TURNKEY CONSTRUCTION)

| STORE | BUILDING |
|---|---|
| NEW . . . . . ■ | NEW . . . . . ■ |
| REMODELING . . . . . ☐ | EXISTING . . . . . ☐ |
| RELOCATION . . . . . ☐ | NEW SHELL ONLY . . ☐ |
| OTHERS . . . . . ☐ | |

| NO. | DATE | BY | DESCRIPTION | CONST |
|---|---|---|---|---|
| | | | | |

REVISIONS

CERTIFICATION AND SEAL

I HEREBY CERTIFY THAT THIS PLAN AND SPECIFICATION WAS PREPARED BY ME OR UNDER MY DIRECT SUPERVISION AND THAT I AM A DULY REGISTERED ARCHITECT OR ENGINEER UNDER THE LAWS OF THE STATE OF MAINE AS SIGNIFIED BY MY HAND AND SEAL.

**FISCAL 2007 CRITERIA - STORE #12326**

WALGREENS
(NWC) WASHINGTON & ALLEN AVES.
PORTLAND, MAINE

DRAWING TITLE
**FLOOR PLAN - MECHANICAL**

CADD PLOT:
VOID PLOT:
RELEASED TO CONSTRUCTION

SCALE: AS NOTED
DRAWN BY: WAL
DATE: 3-26-09
REVIEWED BY: SAM

DRAWING NO.
**M1.1**