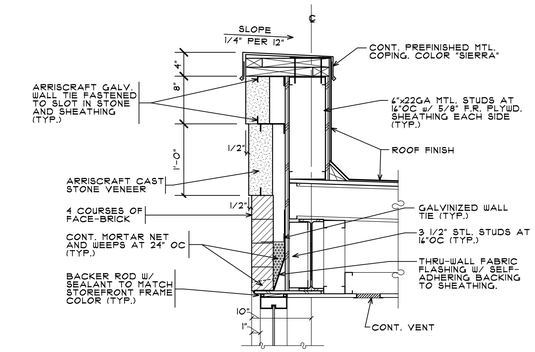

CORNICE DETAIL (4)

SCALE: 1"=1'-0"

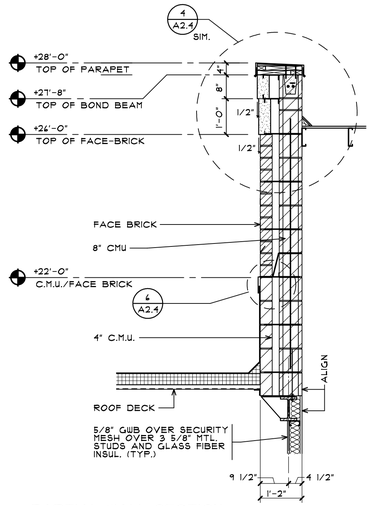

PARTIAL WALL SECTION AT TOWER SIDEWALL (7)

SCALE: 1/2"=1'-0"

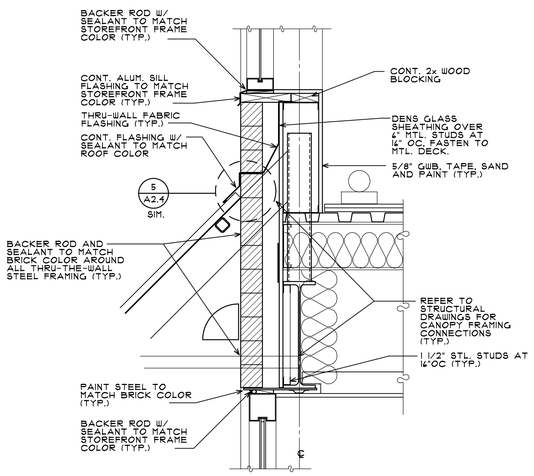

FLASHING DETAIL (3)

SCALE: 1"=1'-0"

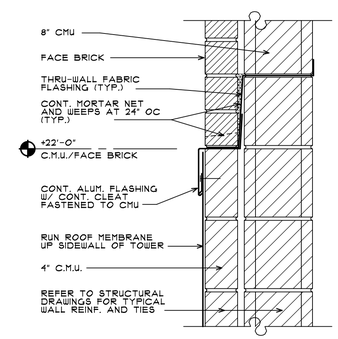

FLASHING DETAIL (6)

SCALE: 1"=1'-0"

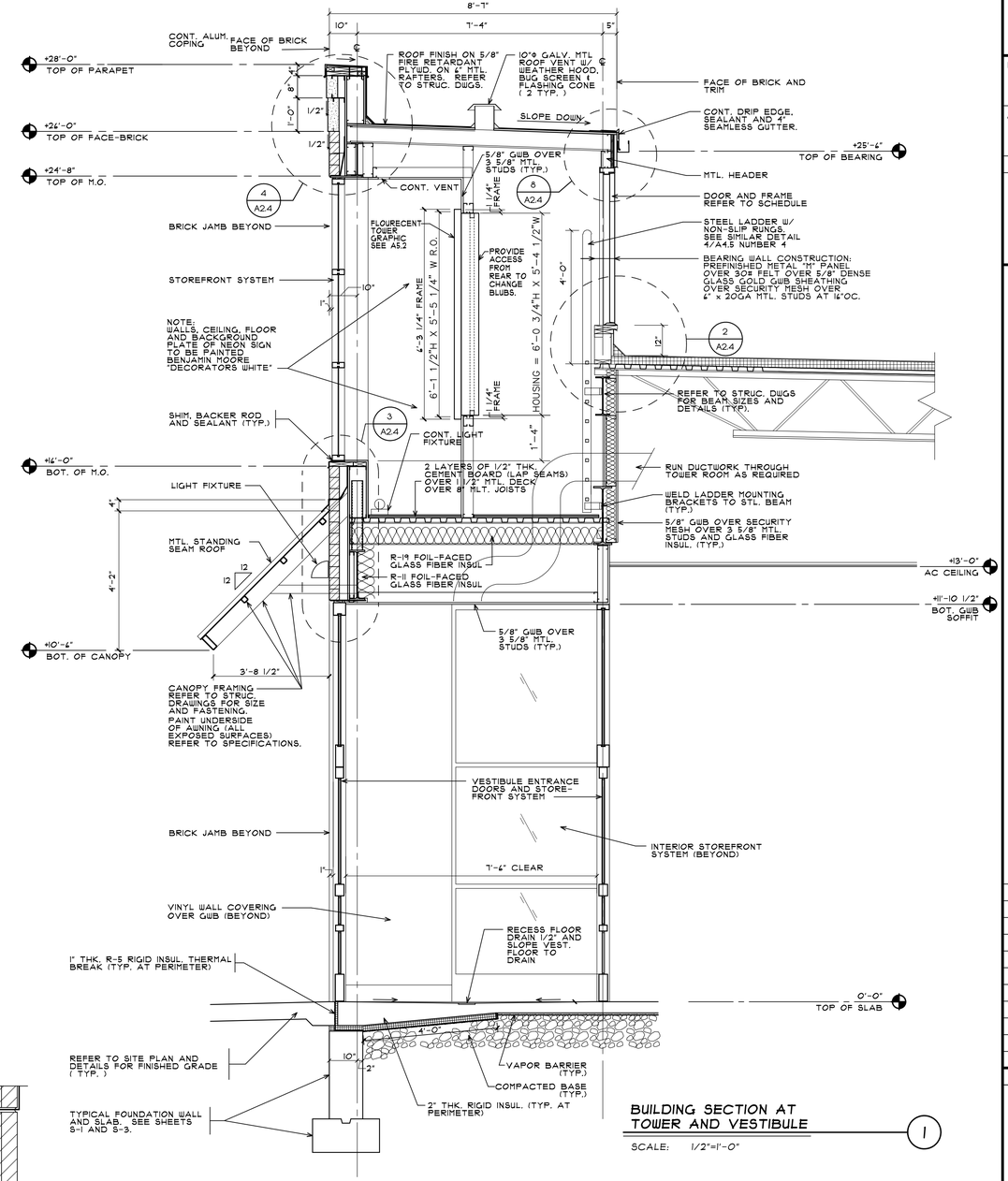

BUILDING SECTION AT TOWER AND VESTIBULE (1)

SCALE: 1/2"=1'-0"

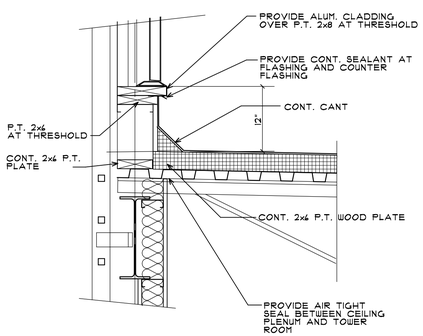

THRESHOLD DETAIL (2)

SCALE: 1"=1'-0"

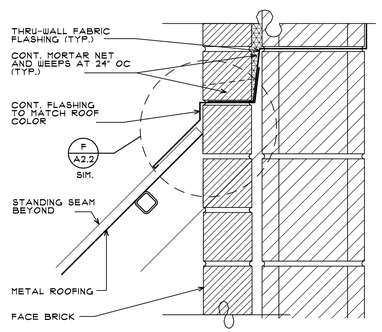

FLASHING DETAIL AT CANOPY (5)

SCALE: 1 1/2"=1'-0"

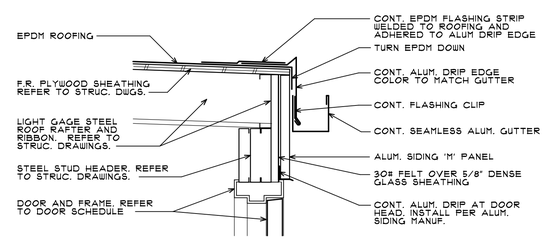

ROOF EDGE DETAIL AT TOWER (8)

SCALE: 1 1/2"=1'-0"

MOESER & ASSOCIATES
206 AYER ROAD HARVARD, MA 978-456-6905
ARCHITECT

DRAWINGS/SPECIFICATIONS BY:
☐ WALGREENS'
■ LANDLORD'S CONSULTANT

ALL CONSTRUCTION WORK, UNLESS NOTED OTHERWISE, BY:
☐ WALGREENS' CONTRACTOR
■ LANDLORD'S CONTRACTOR (TURNKEY CONSTRUCTION)

STORE	BUILDING
NEW . . . . . ■	NEW . . . . . ■
REMODELING . . . . . ☐	EXISTING . . . . . ☐
RELOCATION . . . . . ☐	NEW SHELL ONLY . . ☐
OTHERS . . . . . ☐	

NO.	DATE	BY	DESCRIPTION	CONST

REVISIONS

CERTIFICATION AND SEAL

I HEREBY CERTIFY THAT THIS PLAN AND SPECIFICATION WAS PREPARED BY ME OR UNDER MY DIRECT SUPERVISION AND THAT I AM A DULY REGISTERED ARCHITECT OR ENGINEER UNDER THE LAWS OF THE STATE OF MAINE AS SIGNIFIED BY MY HAND AND SEAL.

FISCAL 2007 CRITERIA - STORE #12326

WALGREENS
(NWC) WASHINGTON & ALLEN AVES.
PORTLAND, MAINE

DRAWING TITLE
BUILDING SECTIONS AND DETAILS

CADD PLOT:
VOID PLOT:
RELEASED TO CONSTRUCTION

SCALE: AS NOTED
DRAWN BY: TD
DATE: 3-26-09
REVIEWED BY: SAM

DRAWING NO. **A2.4**