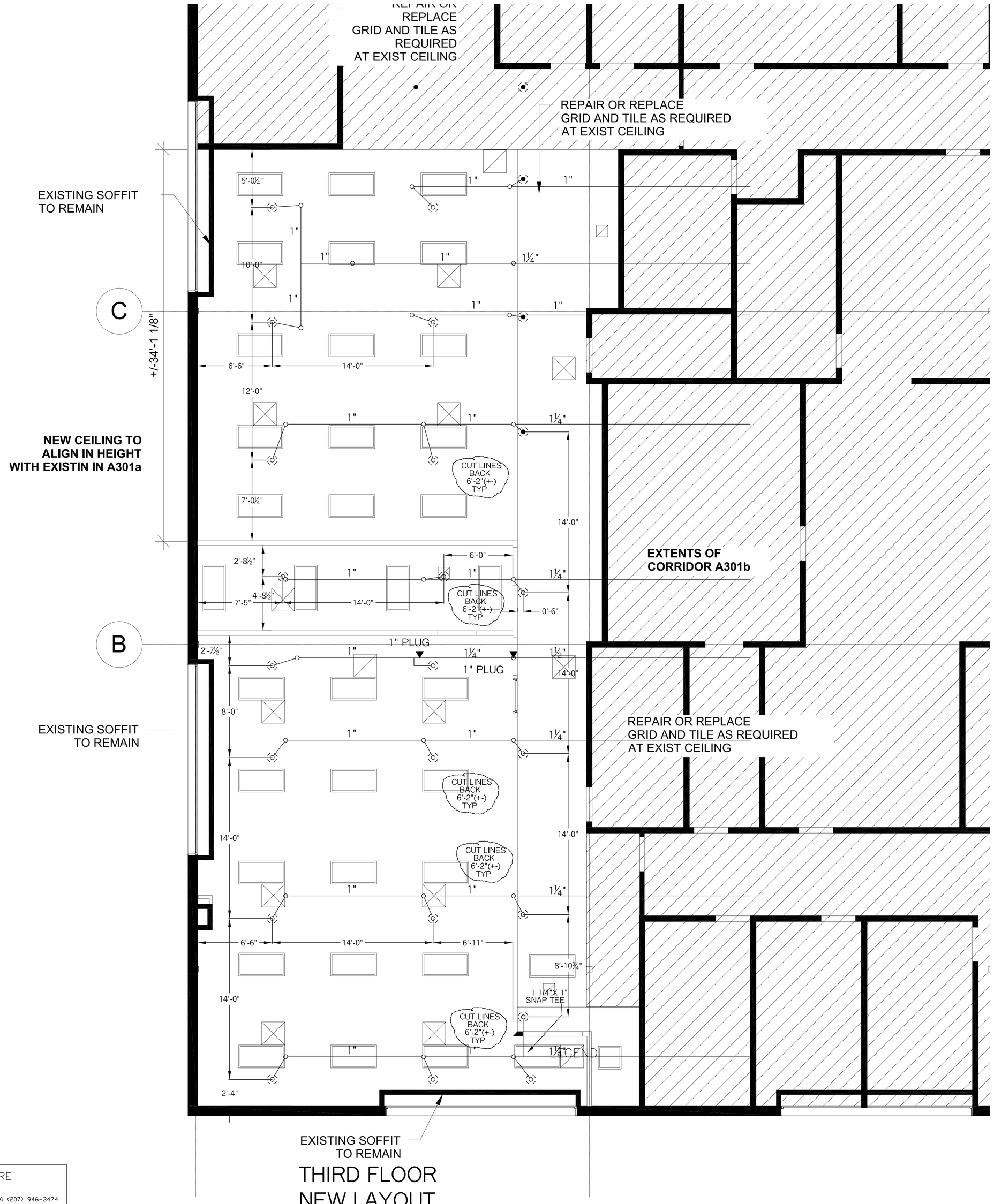

THIRD FLOOR
NEW LAYOUT

N
PLAN NORTH

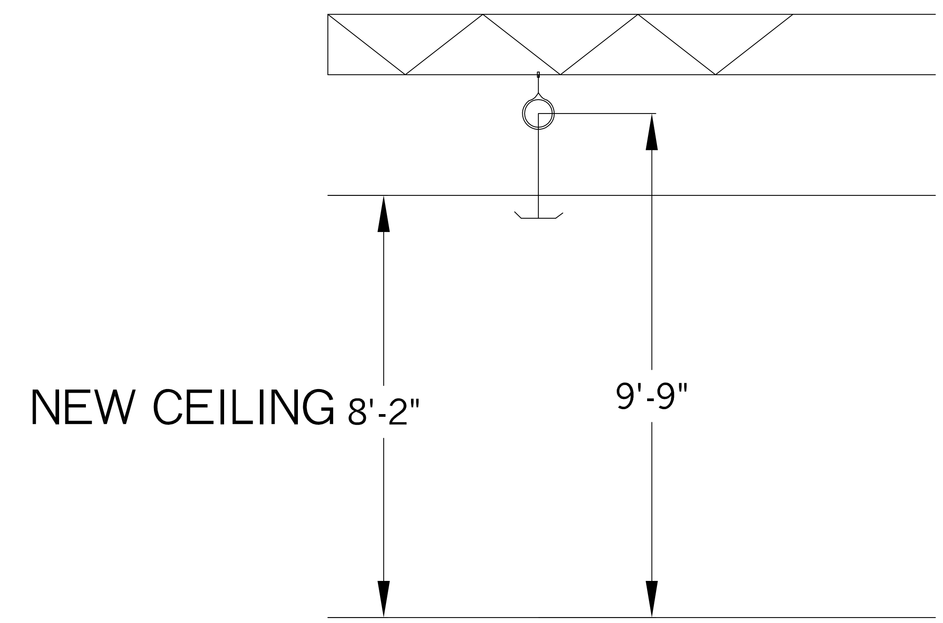

SECTION NTS

GENERAL NOTES

ALL DIMENSIONS ARE CENTER TO CENTER U/N
ALL THREADED PIPE TO BE SCH. 40 BLACK STEEL
ALL SCREWED FITTINGS TO BE STD. WT. C.I. BLACK U/N
RELOCATING OF THE EXISTING SPRINKLER HEADS

- ▷ 155°F QR 1/2" WHITE SIDEWALL
- ◑ 155°F 1/2 BRASS PENDENT
- ○ 155°F 1/2 BRASS UPRIGHT
- 155°F QR 1/2" WHITE RECESSED PENDENT
- EXISTING TO REMAIN
- HANGER
- RISE OR DROP NIPPLE
- VICTAULIC COUPLING

FF k=XX FIN FLR TO CENTERLINE OF PIPE
C k=XX CEILING TO CENTERLINE OF PIPE
TJ k=TOP OF JOIST TO CENTERLINE OF PIPE
BJ k=BOTTOM OF JOIST TO CENTERLINE OF PIPE
BB k=BOTTOM OF BEAM TO CENTERLINE OF PIPE
ELEV k=CIVIL ELEVATION OF CENTERLINE OF PIPE

21 / 155°F — VIKING VK302
WHITE QUICK RESPONSE RECESSED PENDENTS
1/2"X1/2" K=5.6

SYSTEM DESIGN

EXISTING WET PIPE SYSTEM OF AUTOMATIC SPRINKLER SYSTEM
REWORK AND ADD TO PER NFPA 13 REQUIREMENTS
ALL SPRINKLERS TO BE BASED ON LIGHT HAZARD

RESIDENTIAL FIRE
PHONE: (207) 946-3473 FAX: (207) 946-3474
64 DAGGETT HILL ROAD GREENE, MAINE 04236
PROTECTION, LLC

STANLEY J. CAMIC
NICET III -#78065

REVISION NUMBER	DATE			
		SURVEYED BY	SJC	9-26-14
		DRAWN BY	SJC	9-30-14
		APPROVED BY	SJC	10-1-14
		SCALE 1/4"= 1'-0" U/N		
		SHEET NO. 1 OF 1		

TITLE
CASCO BAY HIGH SCHOOL RENO
196 ALLEN AVE
PORTLAND, MAINE

NO. OF SPRINKLERS SHOWN ON THIS SHEET: 21
NO. OF SPRINKLERS ON JOB: 21
CONTRACT NO. C14023