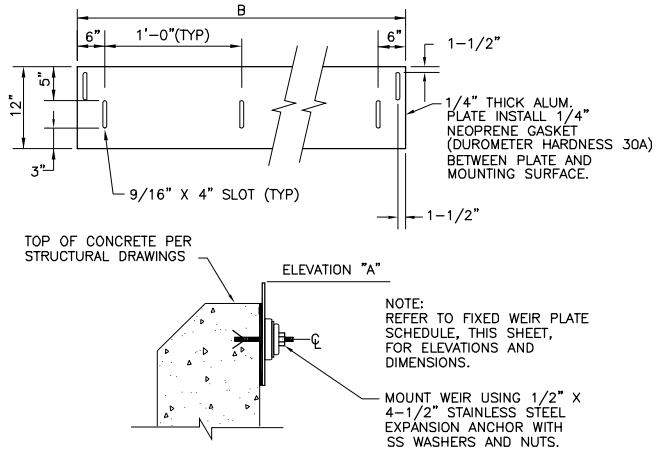

FIXED WEIR PLATE

NTS

NOTE: MATERIALS OF CONSTRUCTION PER SPEC SECTION 05500

FIXED WEIR PLATE SCHEDULE

LOCATION	WEIR NO.	ELEV. "A"	DIM "B"	REMARKS
CHLORINE CONTACT TANK	FW-1	27.00	*6'-2"	PRIMARY SIDE
CHLORINE CONTACT TANK	FW-2	27.00	*6'-2"	PRIMARY SIDE
CHLORINE CONTACT TANK	FW-3	27.00	*9'-3"	SECONDARY SIDE
CHLORINE CONTACT TANK	FW-4	27.00	*9'-3"	SECONDARY SIDE

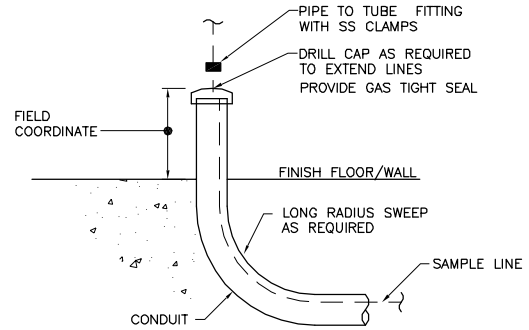

TUBING/CONDUIT PIPE DETAIL

NTS

REFER TO DRAWINGS FOR CONDUIT AND TUBING SIZES

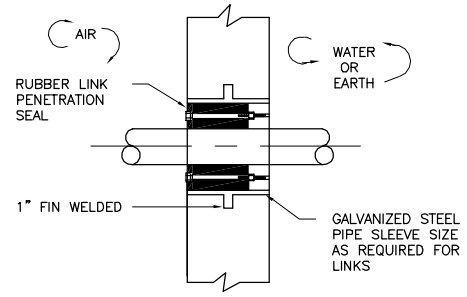

RUBBER LINK SLEEVE DETAIL

NTS

NOTE:
CONTRACTOR SHALL INSTALL DOUBLE LINK TYPE SEALS WHEN LIQUID IS CONTAINED ON ONE OR BOTH SIDES OF THE WALL.

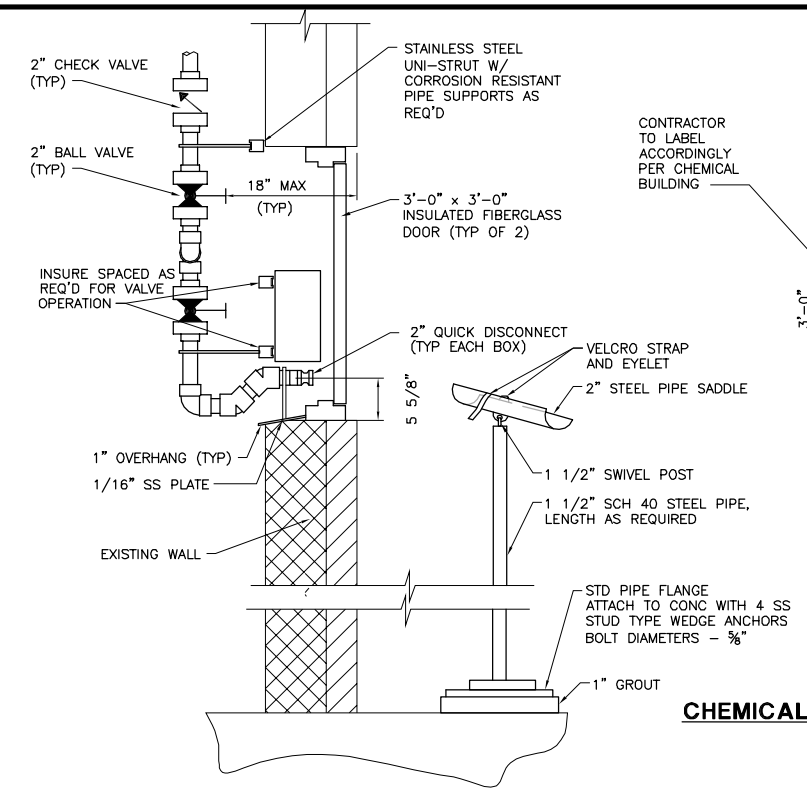

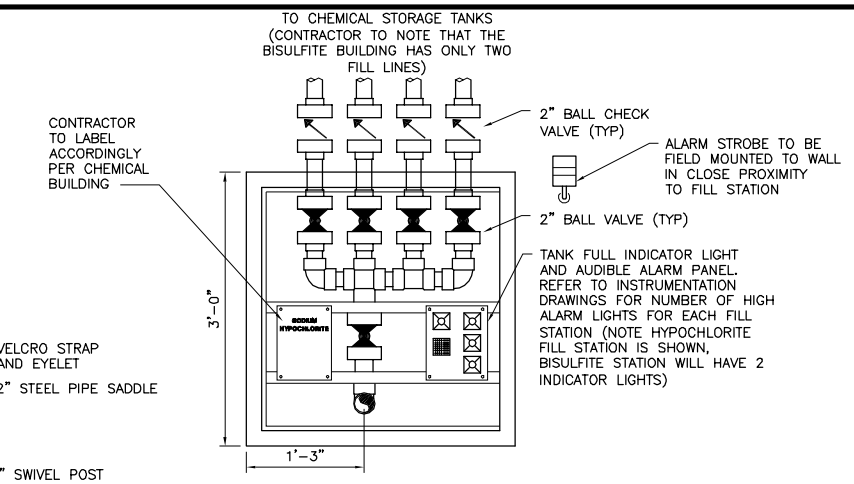

NOTES

1. PROVIDE SAFETY/CHEMICAL IDENTIFICATION LABELING ON DOORS PER SPECIFICATION SECTION 10010.
2. PROVIDE END CAP AND CHAIN FOR ALL CHEMICAL FILL PIPES.
3. ALL MISCELLANEOUS MOUNTING APPURTENANCES SHALL BE PVC, PVC COATED OR STAINLESS STEEL.
4. CONTRACTOR TO COORDINATE WITH OWNER ON LOCATION AND ELEVATION OF FILL STATION AND PIPE SADDLE.

CHEMICAL FILL STATION DETAIL

SCALE: NTS

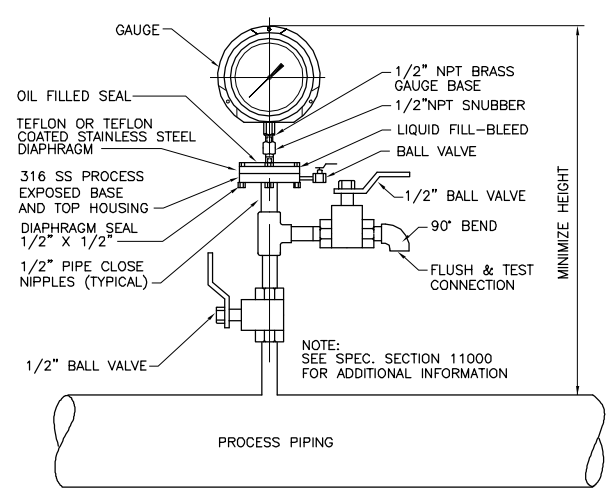

GAUGE ASSEMBLY

NTS

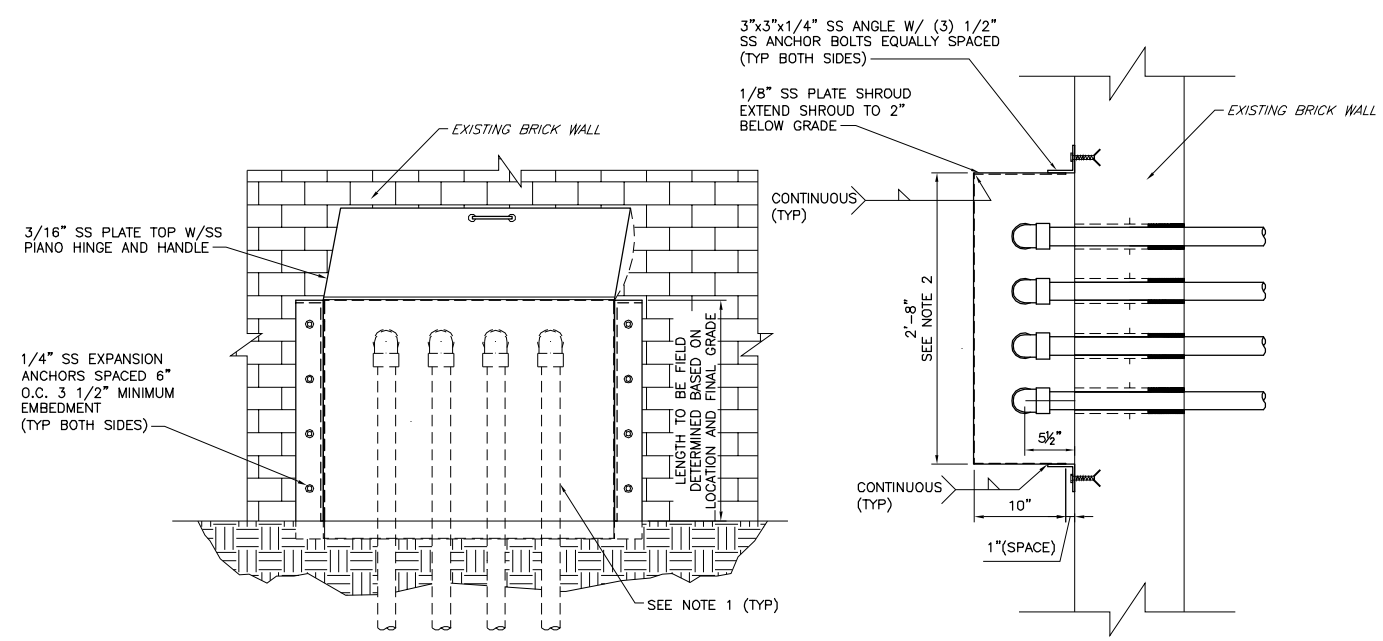

PIPE GUARD DETAIL

NTS

NOTES:

1. PIPING TO BE HEAT TRACED AND INSULATED FROM BUILDING PENETRATION DOWN TO 5' BELOW GRADE.
2. DIMENSION VARIES BASED ON NUMBER OF PIPES, SIZE OF PIPES, LOCATIONS, AND FINAL GRADE ELEVATIONS. FIELD COORDINATE GUARD DIMENSIONS WITH PRIOR REVIEW AND APPROVAL BY THE ENGINEER.

PROGRESS PRINTS
ISSUED FOR REVIEW: 12-15-04
ISSUED FOR BIDDING: 2-18-05

NO	REVISIONS	APP'D	DATE
1			
2			
3			
4			
5			

FF 34
VAULT LOCATION:
LAST WORKED ON:
FILENAME:

DRAWN BY SAL
CHECKED BY DWS/PFB
DATE 2-18-05
APPROVED BY PFB
DATE 2-18-05
BOOK NO. –
PROJECT NO. 10301C
SCALE AS NOTED

Wright-Pierce
Offices throughout New England
www.wright-pierce.com

PORTLAND WATER DISTRICT
PORTLAND, MAINE
EAST END WWTF DISINFECTION AND DECHLORINATION SYSTEMS UPGRADE

MISCELLANEOUS DETAILS

DWG PR-9

V:\Dwgs\10301C\PROJ\10301CR09.dwg 4/29/2005 12:04:43 PM sal