Inspections Division
Date: 02/01/17

WBB300 & WBB500 Installation

Bracket Arm (2)	Crossbar (1)	8x80mm Lag Screw(6)	10mm Concrete Anchor (6)	1" Bolt (4) Clip Nut (4)	Rubber Mount (4)
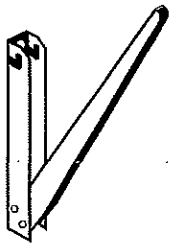	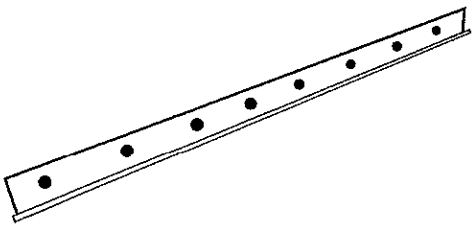	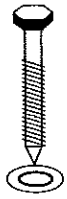	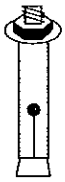	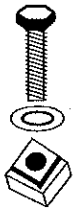	

1. Extend bracket arms.

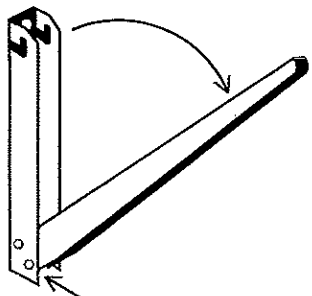

2. Level and attach crossbar with two lag screws or anchors provided (Substitute other fastener types where appropriate). Slide extended bracket arms onto crossbar.

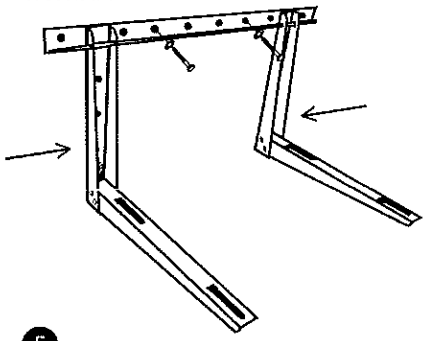

3. Insert clear clip/nut into mounting key hole from below arm. Attach rubber mount through key hole, aligning center hole with clip/nut. Repeat and slide all four mounts to the center of their respective slots.

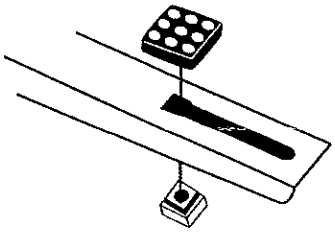

4. Unscrew rubber stand-offs on the back of each arm as needed to level both arms.

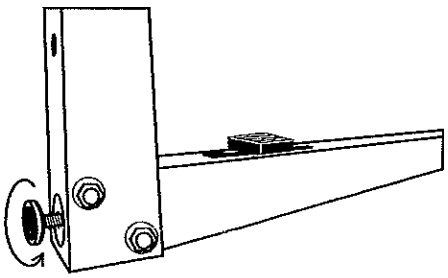

5. Position arms to accomodate equipment measurments and tighten set screws. Use remaining lag screws or anchors to secure bracket arms.

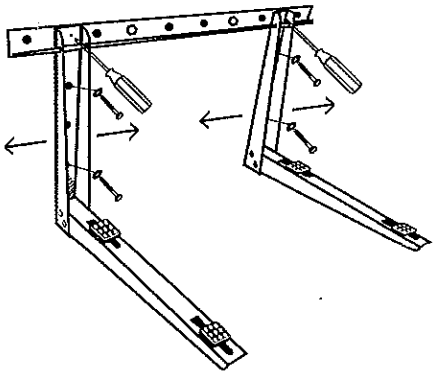

6. Position mounts to accomodate equipment measurments. Place condenser on mounts aligning holes in feet with center hole in mounts. Attach using 4 provided bolts.

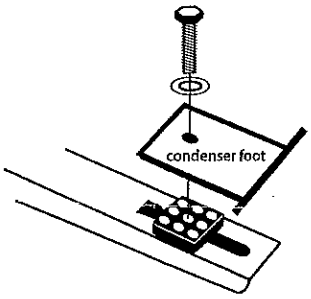

The buyer of the aforelisted product(s) hereby indemnify Rectorseal Corporation, its successors and assigns, as they may in time appear, harmless against any claims, demands or liability arising out of the misuse of or from any use outside the intended scope of the aforelisted product(s). Misuse or use outside the intended scope shall include any use contrary to that which is indicated with the accompanying literature and instructions. This unit must be installed in accordance with all applicable local building and mechanical codes. The purchaser or installer of these products is responsible for insuring that the structure and/or building materials making up the structure are of sufficient strength, and a sufficient number and type of fasteners are installed, to take the combined weight of the bracket and unit or units.

MITSUBISHI ELECTRIC

COOLING & HEATING

M-SERIES

Inspections Division
Date: 02/01/17

SUBMITTAL DATA: MXZ-8C48NAHZ

4-TON MULTI-INDOOR INVERTER HEAT-PUMP SYSTEM

Job Name:

System Reference: | Date:

GENERAL FEATURES

- Quiet operation
- Built-in base pan heater to prevent ice in drain pan
- M-Net adaptor kits are available as an option*
- Limited warranty: five years parts and seven years compressors

*Included standard in PAC-MKA30/50BC Branch Box

ACCESSORIES

- ☐ Three-port Branch Box (PAC-MKA30BC)
- ☐ Five-port Branch Box (PAC-MKA50BC)
- ☐ Distribution Pipe for Flare Connection (MSDD-50AR; necessary for installing two branch boxes)
- ☐ Distribution Pipe for Brazed Connection (MSDD-50BR; necessary for installing two branch boxes)
- ☐ 3/8" x 1/2" Port Adapter (MAC-A454JP)
- ☐ 1/2" x 3/8" Port Adapter (MAC-A455JP)
- ☐ 1/2" x 5/8" Port Adapter (MAC-A456JP)
- ☐ 1/4" x 3/8" Port Adapter (PAC-493PI)
- ☐ 3/8" x 5/8" Port Adapter (PAC-SG76RJ)
- ☐ M-NET Adapter (PAC-IF01MNT-E)
- ☐ Drain Socket (PAC-SH71DS-E)
- ☐ Airflow Guide (PAC-SH96SG-E)

ENERGY STAR

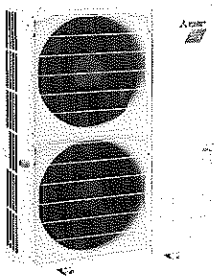

Outdoor Unit: MXZ-8C48NAHZ

INVERTER

R410A

(For data on specific indoor units, see the MXZ-C Technical and Service Manual.)

Specifications			Model Name
Unit Type			MXZ-8C48NAHZ
Cooling* (Non-ducted / Ducted)	Rated Capacity	Btu/h	48,000 / 48,000
	Capacity Range	Btu/h	6,000 - 48,000
	Rated Total Input	W	4,000 / 5,050
Heating at 47°F* (Non-ducted / Ducted)	Rated Capacity	Btu/h	54,000 / 54,000
	Capacity Range	Btu/h	7,200 - 54,000
	Rated Total Input	W	4,220 / 4,990
Heating at 17°F* (Non-ducted/Ducted)	Rated Capacity	Btu/h	40,000 / 43,000
	Maximum Capacity	Btu/h	54,000 / 54,000
	Rated Total Input	W	4,340 / 5,250
Heating at 5°F*	Maximum Capacity	Btu/h	54,000
Electrical Requirements	Power Supply	Voltage, Phase, Hertz	208 / 230V, 1-Phase, 60 Hz
	Recommended Fuse/Breaker Size	A	50
	MCA	A	42
Voltage	Indoor - Outdoor S1-S2	V	AC 208 / 230
	Indoor - Outdoor S2-S3	V	DC ±24
Compressor			Hermetic
Fan Motor (ECM)		F.L.A.	0.4+0.4
Sound Pressure Level	Cooling	dB(A)	51
	Heating		54
External Dimensions (H x W x D)		In / mm	52-11/16 x 41-11/32 x 13+1 1338 x 1050 x 330+25
Net Weight		Lbs / kg	276 / 125
External Finish			Munsell No. 3Y 7.8/11
Refrigerant Pipe Size O.D. — Eight Ports	Liquid (High Pressure)	In / mm	3/8 / 9.52
	Gas (Low Pressure)		5/8 / 15.88
Max. Refrigerant Line Length		Ft / m	492 (150)
Max. Piping Length for Each Indoor Unit		Ft / m	262 (80)
Max. Refrigerant Pipe Height Difference	If IDU is Above ODU	Ft / m	164 (50)
	If IDU is Below ODU		131 (40)
Connection Method			Flared/Flared
Refrigerant			R410A

*** Rating Conditions per AHRI Standard:**

Cooling | Indoor: 80° F (27° C) DB / 67° F (19° C) WB
Cooling | Outdoor: 95° F (35° C) DB / 75° F (24° C) WB

Heating at 47°F | Indoor: 70° F (21° C) DB
Heating at 47°F | Outdoor: 47° F (8° C) DB / 43° F (6° C) WB

Heating at 17° F | Indoor: 70° F (21° C) DB
Heating at 17° F | Outdoor: 17° F (-8° C) DB / 15° F (-9° C) WB

SPECIFICATIONS: MXZ-8C48NAHZ, contd.

Inspections Division
Date: 02/01/17

Operating Range:

	Outdoor
Cooling	D.B. 23 to 115° F [D.B. −5 to 46° C]*1
Heating	D.B. −13 to 70° F [D.B. −25 to 21° C]

*1. D.B. 5 to 115° F [D.B. −15 to 46° C],
when an optional Air Outlet Guide is installed.

Energy Efficiencies:

Indoor Unit Type	SEER	EER	HSPF	COP @ 47°F	COP @ 17°F
Non-ducted	18.9	12.0	11.0	3.75	2.70
Ducted and Non-ducted	16.80	10.75	10.50	3.46	2.55
Ducted	14.7	9.5	10.0	3.17	2.40

Multi-zone Indoor/Outdoor Combination Table

	MSZ-FH*	MSZ-GE*	MFZ*	MVZ*	SEZ-KD*	SLZ*	PCA (A24)*	PLA*	PEAD*
MXZ-4C36NAHZ	OK	OK	OK	OK	OK	OK	NO	OK	24, 30, 36 OK

*** Refer to indoor unit submittal.**

Notes:

- Minimum of two Indoor Units must be connected to the MXZ-8C48NAHZ.
- Minimum installed capacity cannot be less than 12,000 Btu/h.
- System can operate with only one Indoor Unit turned on.
- May connect to any style indoor unit or combination.
- Information provided at 208/230V.
  Refer to the MXZ-C Technical & Service Manual for detailed specifications and additional information per Indoor Unit Combination.

Notes:

MXZ-8C48NAHZ SYSTEM DESIGN

Inspections Division
Date: 02/01/17

Outdoor unit			MXZ-8C48NAHZ
			5HP
	Rated capacity (kBTU/h)	Cooling	48
		Heating	54
	Refrigerant		R410A
Connectable indoor unit	Capacity		Type 06 to Type 36 **Caution:** The indoor unit which rated capacity exceeds 36 kBTU/ h (Type 36) can NOT be connected.
	Number of units		2 to 8 units
	Total system wide capacity		25 to 130% of outdoor unit capacity (12 to 62.4 kBTU/h)
Connectable branch box	Number of units		1 or 2 units

Connectable indoor unit lineups (Heat pump inverter type)

Model type		Model name	Capacity class [kBTU/h]							
			06	09	12	15	18	24	30	36
Wall mounted	Deluxe	MSZ-FE09/12/18NA		●	●		●			
		MSZ-FH09/12/15NA		●	●	●				
	Standard	MSZ-GE06/09/12/15/18/24NA	●	●	●	●	●	●		
Ceiling concealed	Low static pressure	SEZ-KD09/12/15/18NA		●	●	●	●			
	Middle static pressure	PEAD-A24/30/36AA4						●	●	●
4-way ceiling cassette	2 by 2 type	SLZ-KA09/12/15NA		●	●	●				
	Standard	PLA-A12/18/24/30/36BA4			●		●	●	●	●
Floor standing		MFZ-KA09/12/18NA		●	●		●			
Multi-position		MVZ-A12/18/24/30/36AA4			●		●	●	●	●

Branch box	PAC-MKA50BC	PAC-MKA30BC
Number of branches (Indoor unit that can be connected)	5 branches (MAX. 5 units)	3 branches (MAX. 3 units)

Note: A maximum of 2 branch boxes can be connected to 1 outdoor unit.

Branch Box Combinations

Three-port	Five-port
1	0
0	1
1	1
2	0
0	2 (Up to 8 IDU)

■ If Using One Branch Box
Flare connection employed (No brazing)

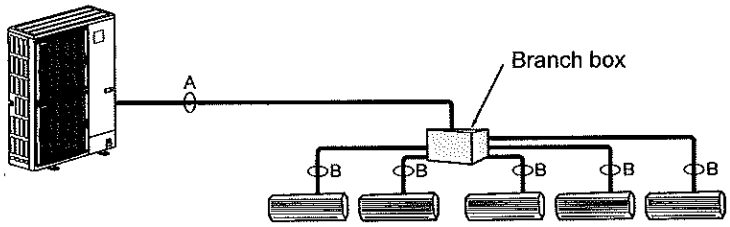

■ If Using Two Branch Boxes

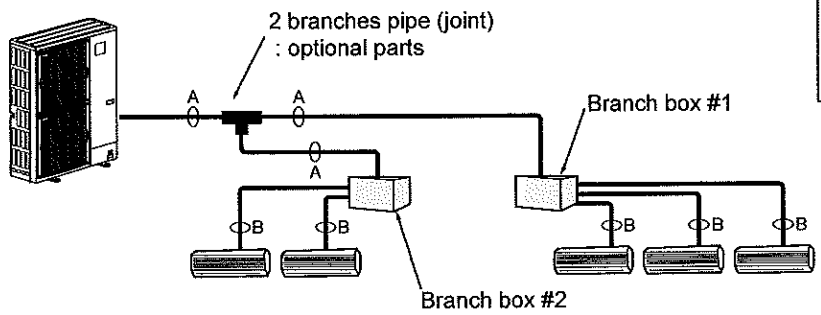

Piping connection size

	A	B
Liquid	ϕ9.52 mm (3/8 inch)	The piping connection size differs according to the type and capacity of indoor units. Match the piping connection size of branch box with indoor unit. If the piping connection size of branch box does not match the piping connection size of indoor unit, use optional different-diameter (deformed) joints to the branch box side. (Connect deformed joint directly to the branch box side.)
Gas	ϕ15.88 mm (5/8 inch)	

■ Installation procedure (2 branches pipe (joint))
Refer to the installation manuals of MSDD-50AR-E and MSDD-50BR-E.

MXZ-8C48NAHZ COOLING AND HEATING CAPACITY AND CHARACTERISTICS

Inspections Division
Date: 02/01/17

1. Method for obtaining system cooling and heating capacity:

To obtain the system cooling and heating capacity and the electrical characteristics of the outdoor unit, first add up the ratings of all the indoor units connected to the outdoor unit (see table below). For Standard Capacity Diagram, please refer to the MXZ-C Technical & Service Manual.

(1) Capacity of indoor unit

	Model Number for indoor unit	Model 06	Model 09	Model 12	Model 15	Model 18	Model 24	Model 30	Model 36
M series	Model Capacity [kBtu/h]	6.0	9.0	12.0	14.0*1 15.0*2	17.2*3 18.0*4	22.5	—	—
P series		—	—	12.0	—	18.0	24.0	30.0	35.0
SEZ		—	8.1	11.5	14.1	17.2	—	—	—
SLZ		—	8.4	11.1	15.0	—	—	—	—
MVZ		—	—	12.0	—	18.0	24.0	30.0	36.0

*1 The value is for MSZ-GE15NA.
*2 The value is for MSZ-FH15NA.
*3 The value is for MSZ-GE/FH18NA.
*4 The value is for MSZ-FE18NA or MFZ-KA18NA.

(2) Sample calculation

1 System assembled from indoor and outdoor unit (in this example the total capacity of the indoor units is greater than that of the outdoor unit)
- Outdoor unit MXZ-5C42NAHZ
- Indoor unit MSZ-GE09NA × 2 + MSZ-FH15NA ×2

2 According to the conditions in 1 , the total capacity of the indoor unit will be: 9.0 × 2 + 15.0 × 2 = 48.0

3 The following figures are obtained from the 16.8 total capacity of indoor units, referring the standard capacity diagram in "4-3-3. MXZ-5C42NAHZ <cooling>" and "4-3-4. MXZ-5C42NAHZ <heating>".

Capacity (kBTU/h)		Outdoor unit power consumption (kW)		Outdoor unit current (A)/ 230 V	
Cooling	Heating	Cooling	Heating	Cooling	Heating
A 42.0	B 48.0	3.46	4.37	15.26	19.31

2. Method for obtaining the heating and cooling capacity of an indoor unit:

(1) The capacity of each indoor unit (kW) = the capacity A (or B) o $\frac{\text{model capacity}}{\text{total model capacity of all indoor units}}$

(2) Sample calculation (using the system described above in 4-1-1. (2)):

During cooling:

- The total model capacity of the indoor unit is:
  9.0 × 2 + 15.0 × 2 = 48.0 kBTU/h
  Therefore, the capacity of MSZ-GE09NA and MSZ-FH15NA will be calculated as follows by using the formula in 4-1-2. (1):

Model 09 = $42.0 \times \frac{9.0}{48.0}$ = 7.88 kBTU/h

Model 15 = $42.0 \times \frac{15.0}{48.0}$ = 13.13 kBTU/h

During heating:

- The total model capacity of indoor unit is:
  10.9 × 2 + 18.0 × 2 = 57.8 kBTU/h
  Therefore, the capacity of MSZ-GE09NA and MSZ-FH15NA will be calculated as follows by using the formula in 4-1-2. (1):

Model 25 = $48.0 \times \frac{10.9}{57.8}$ = 9.05 kBTU/h

Model 50 = $48.0 \times \frac{18.0}{57.8}$ = 14.95 kBTU/h

DIMENSIONS: PAC-MKA30BC AND PAC-MKA50BC BRANCH BOXES

Inspections Division
Date: 02/01/17

PAC-MKA30BC

Unit: mm <in>

SUSPENSION BOLT : W3/8(M10)

REFRIGERANT PIPE FLARED CONNECTION

	A	B	C			TO OUTDOOR UNIT
LIQUID PIPE	1/4F	1/4F	1/4F			3/8F
GAS PIPE	3/8F	3/8F	3/8F			5/8F

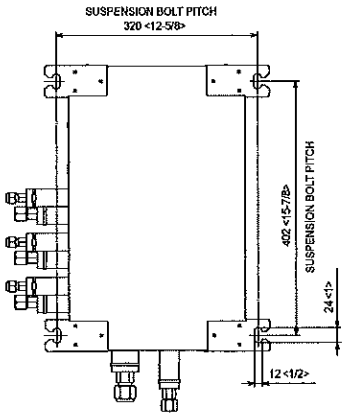

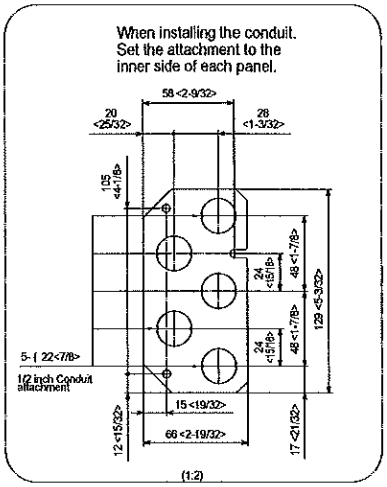

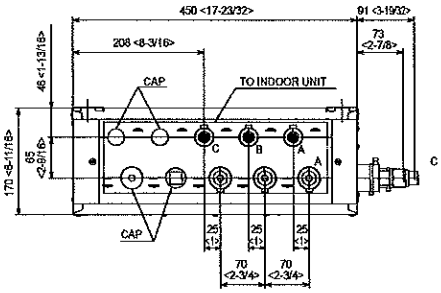

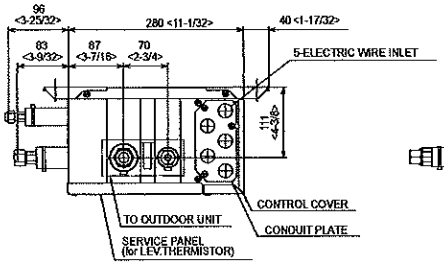

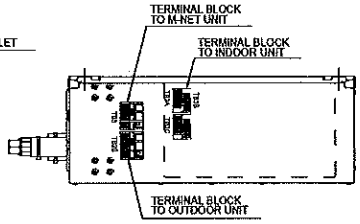

PAC-MKA50BC

Unit: mm <in>

SUSPENSION BOLT : W3/8(M10)

REFRIGERANT PIPE FLARED CONNECTION

					E	TO OUTDOOR UNIT B
LIQUID PIPE	1/4F	1/4F	1/4F	1/4F	1/4F	3/8F
GAS PIPE	3/8F	3/8F	3/8F	3/8F	1/2F	5/8F

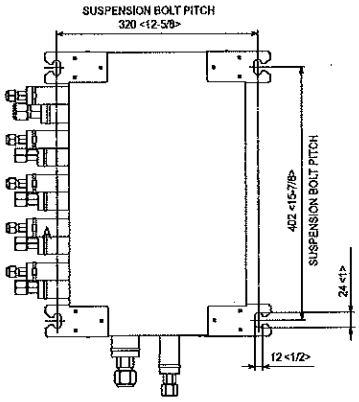

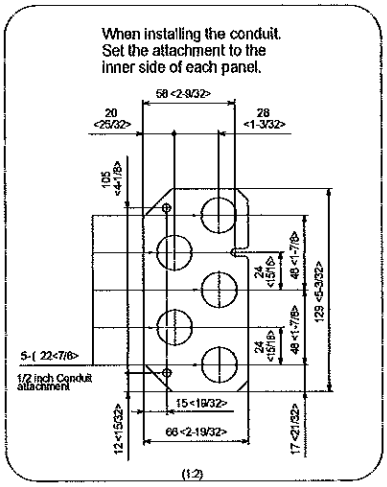

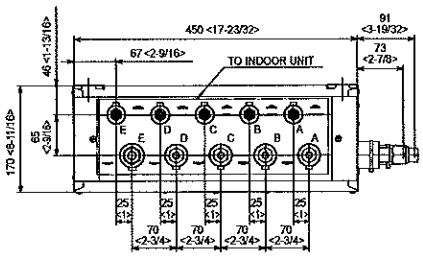

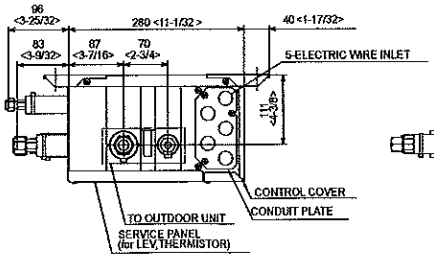

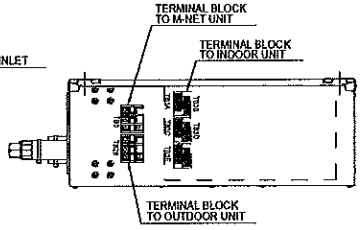

DIMENSIONS: MXZ-8C48NAHZ

Inspections Division
Date: 02/01/17

Unit: mm <in>

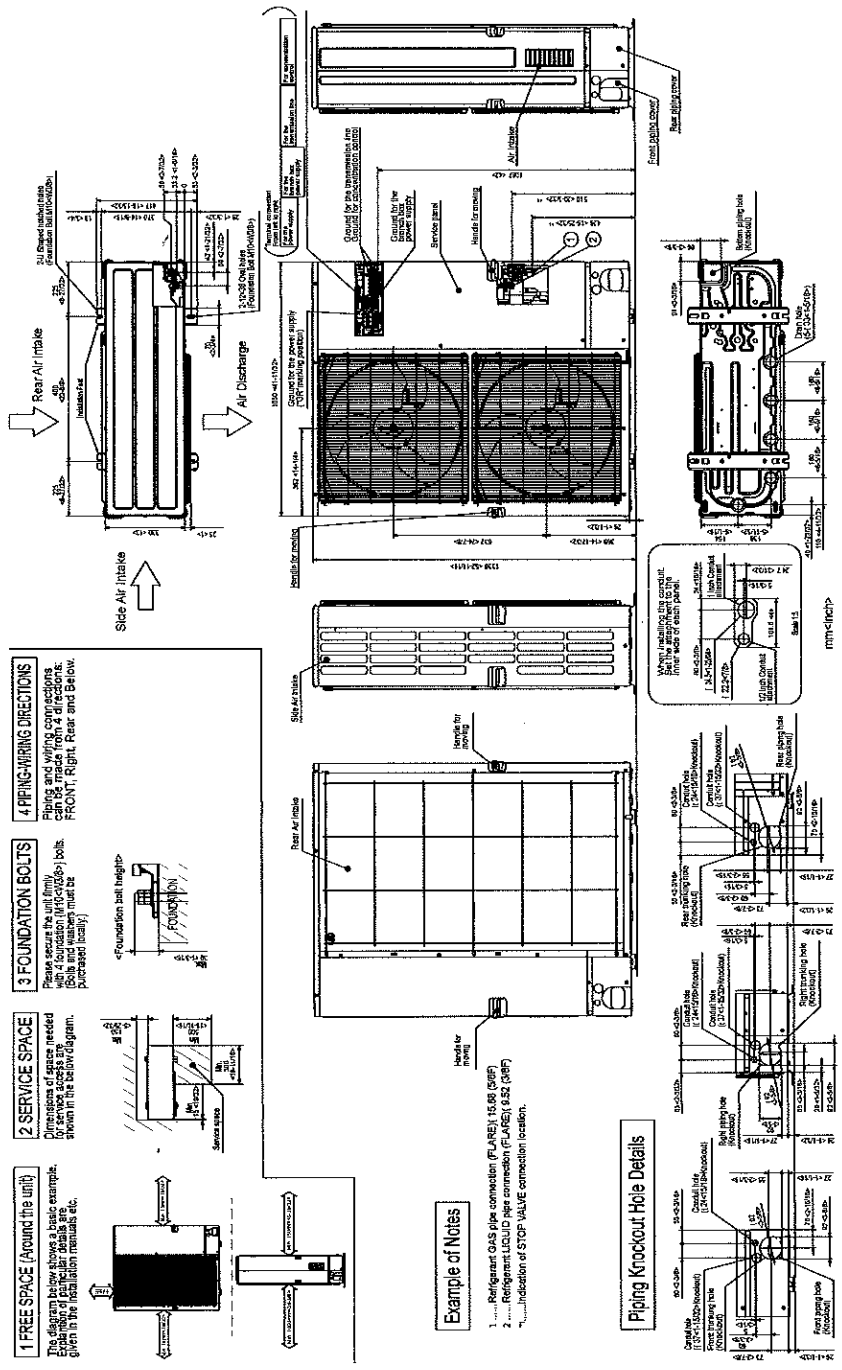

MITSUBISHI ELECTRIC
COOLING & HEATING

1340 Satellite Boulevard
Suwanee, GA 30024
Toll Free: 800-433-4822
www.mehvac.com

MITSUBISHI ELECTRIC

COOLING & HEATING

ENERGY STAR

M-SERIES

Inspections Division
Date: 02/01/17

SUBMITTAL DATA: MSZ-FH18NA & MUZ-FH18NA

18,000 BTU/H WALL-MOUNTED HEAT PUMP SYSTEM

Job Name:	
System Reference:	Date:

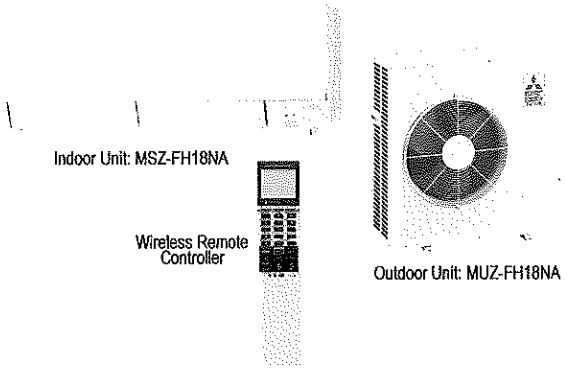

GENERAL FEATURES

- Highly energy-efficient system that features 100% heating capacity at 5° F
- Updated sleek, compact indoor unit design
- Includes Standard, Platinum Deodorizing, and Anti-allergy Enzyme filters for a complete air purifying system
- "Powerful Mode" function permits system to temporarily run at a lower/higher temperature with an increased fan speed, which quickly brings the room to the optimum comfort level
- Integrated i-see Sensor automatically adjusts the unit's operation according to temperature differences detected between the floor and the intake air, ensuring optimum comfort and energy usage
- Base Pan Heater is available as an option
- Limited warranty: five years parts and seven years compressors

ACCESSORIES

Outdoor Unit

- ☐ Base Pan Heater (MAC-642BH-U)
- ☐ Three-pole Disconnect Switch (TAZ-MS303)
- ☐ Air Outlet Guide (MAC-886SG-E)
- ☐ Mounting Base (DSD-400N)
- ☐ Mounting Pad (ULTRILITE1)
- ☐ Drain Socket Assembly (MAC-851DS)

Indoor Unit

- ☐ Condensate Pump (BlueDiamond X87-711/721; 115/230V)
- ☐ Condensate Pump (Sauermann SI30-115/230; 115/230V)
- ☐ Replacement Platinum Deodorizing Filter (MAC-3000FT-E)
- ☐ Replacement Anti-allergy Enzyme Filter (MAC-2330FT-E)

Controller Options

- ☐ Wireless Wall-mounted Remote Controller Kit (MHK1)*
- ☐ Portable Central Controller (MCCH1)*
- ☐ Outdoor Air Sensor (MOS1)*
- ☐ Wired Wall-mounted Controller (PAR-31MAA requires MAC-333IF)*
- ☐ Simple MA Remote Controller (PAC-YT53CRAU requires MAC-333IF)*

*See Submittal for information on each option

R410A INVERTER

SPECIFICATIONS : MSZ-FH18NA & MUZ-FH18NA

Inspections Division
Date: 02/01/17

Cooling *1
Rated Capacity ..... 17,200 Btu/h
Capacity Range ..... 6,450 ~ 21,000) Btu/h
Rated Total Input ..... 1,430 W
Maximum Total Input ..... 2,220 W
SEER ..... 21.0 Btu/h/W

Heating at 47° F *2
Rated Capacity ..... 20,300 Btu/h
Capacity Range ..... 5,150 - 30,000 Btu/h
Rated Total Input ..... 1,720 W
Maximum Total Input ..... 3,390 W
HSPF ..... 12.0 Btu/h/W

Heating at 17° F *3
Rated Capacity ..... 13,700 Btu/h
Maximum Capacity ..... 20,300 Btu/h
Rated Total Input ..... 1,320 W
Maximum Total Input ..... 3,180 W

Heating at 5° F
Maximum Capacity ..... 20,300 Btu/h

Rating Conditons:
*1 Cooling | Indoor: 80° F (27° C) DB / 67° F (19° C) WB
*1 Cooling | Outdoor: 95° F (35° C) DB / 75° F (24° C) WB
*2 Heating at 47°F | Indoor: 70° F (21° C) DB / 60° F (16° C) WB
*2 Heating at 47°F | Outdoor: 47° F (8° C) DB / 43° F (6° C) WB
*3 Heating at 17° F | Indoor: 70° F (21° C) DB / 60° F (16° C) WB
*3 Heating at 17° F | Outdoor: 17° F (-8° C) DB / 15° F (-9° C) WB
*4 Heating at 5° F | Indoor: 70° F (21° C) DB / 60° F (16° C) WB
*4 Heating at 5° F | Outdoor: 5° F (-15° C) DB / 5° F (-15° C) WB

Electrical Requirements
Power Supply ..... 208 / 230V, 1-Phase, 60 Hz
Breaker Size ..... 20 A

Voltage
Indoor - Outdoor S1-S2 ..... AC 208 / 230V
Indoor - Outdoor S2-S3 ..... DC +/- 24V
Indoor - Remote Controller ..... MHK1 DC 3V
PAR-31MAA DC 12V
PAC-YT53CRAU DC 12V

Operating Conditons
Cooling
Indoor Intake Air Temp. . . (Max.) 90° F (32° C) DB / 73° F (23° C) WB
(Min.) 67° F (19° C) DB / 57° F (14° C) WB

Outdoor Intake Air Temp. ..... (Max.) 115° F (46° C) DB
(Min.) 14° F (-10° C) DB

Heating
Indoor Intake Air Temp. . .(Max.) 80° F (27° C) DB / 67° F (19° C) WB
(Min.) 70° F (21° C) DB / 60° F (16° C) WB

Outdoor Intake Air Temp. (Max.)75° F (24° C) DB / 65° F (18° C) WB
(Min.) -13° F (-25° C) DB / -14° F (-26° C) WB**

** System cuts out at -18° F (-28° C) to avoid thermistor error, but recovers from cutout operation and automatically restarts at -14° F (-26°C).

Indoor Unit
MCA ..... 1.0 A
Blower Motor (ECM) ..... 0.67 F.L.A.
Blower Motor Output ..... TBD

Airflow (Lo - Med - Hi - Super Hi - Powerful)
Cooling ..... 225-262-304-355-437 Dry CFM
194-225-261-305-376 Wet CFM
Heating ..... 201-254-317-394-514 Dry CFM

Sound Pressure Level (Lo - Med - Hi - Super Hi - Powerful)
Cooling ..... 27-31-35-39-44 dB(A)
Heating ..... 25-29-34-39-46 dB(A)

External Finish Color ..... Munsell 1.0Y 9.2/0.2

External Dimensions
Inches: ..... 12 + 11/16 H x 36-7/16 W x 9-3/16 D
mm: ..... 305 +17 H x 925 W x 234 D

Weight Unit ..... 29 lbs. / 12 kg
Field Drainpipe Size O.D. ..... 5/8 in. / 15mm

Outdoor Unit
MCA ..... 16 A
Fan Motor (ECM) ..... 0.93 F.L.A.

Sound Pressure Level
Cooling *1 ..... 52 dB(A)
Heating *2 ..... 55 dB(A)

External Finish Color ..... Munsell 3Y 7.8/1.1

Dimensions
Inches ..... 34-5/8 H x 33-1/16 W x 13 D
mm: ..... 880 H x 840 W x 330

Weight ..... 124 lbs. / 56 kg

Refrigerant Type R410A

Refrigerant Pipe
Gas Side O.D. ..... 1/2" x 12.7 mm
Liquid Side O.D. ..... 1/4" x 6.35 mm

Refrigerant Pipe Length
Height Difference (Max.) ..... 50' x 15m
Length (Max.) ..... 100' x 30m

Connection Method
Indoor/Outdoor ..... Flared

Notes:

DIMENSIONS: MSZ-FH18NA & MUZ-FH18NA

Inspections Division
Date: 02/01/17

MSZ-FH18NA

Unit: mm (in.)

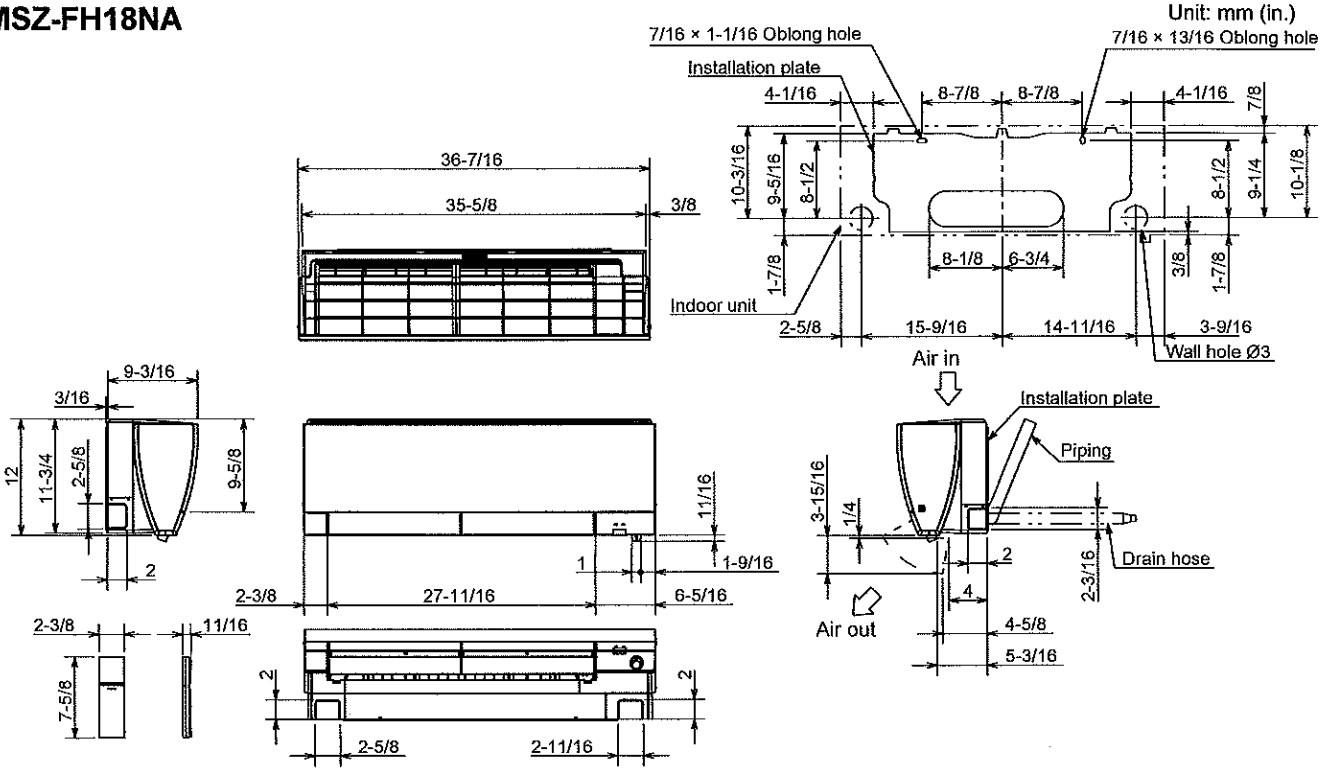

MUZ-FH18NA

Unit: mm (in.)

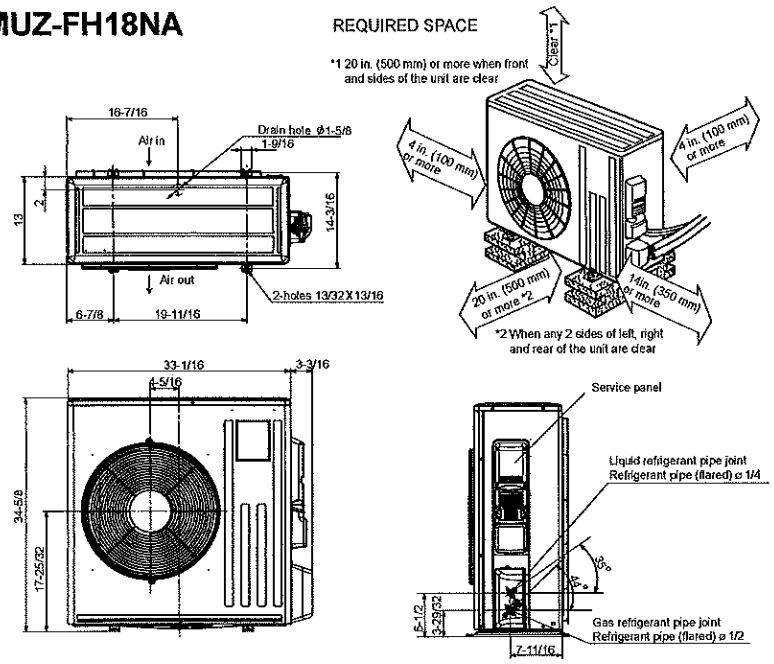

MITSUBISHI ELECTRIC
COOLING & HEATING

1340 Satellite Boulevard
Suwanee, GA 30024
Tele: 678-376-2900 • Fax: 800-889-9904
Toll Free: 800-433-4822
www.mehvac.com

Job Name:

System Reference: | Date:

Inspections Division
Date: 02/01/17

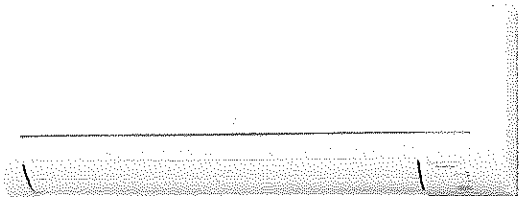

Indoor Unit: MSZ-GL24NA-U1

Wireless Remote Controller

SPECIFICATIONS:

Rated Capacity*		
Cooling*1	Btu/h / W	22,400
Heating at 47° F*2	Btu/h / W	27,600

Rating Conditions per AHRI Standard:
*1 Cooling | Indoor: 80° F(27° C)DB / 67° F(19° C)WB ; Outdoor: 95° F(35° C)DB / 75° F(24° C)WB
*2 Heating at 47°F | Indoor: 70° F (21° C)DB / 60° F (16° C)WB ; Outdoor: 47° F (8° C)DB / 43° F (6° C)WB

For data on specific indoor units (all ducted, all non-ducted, and both ducted and non-ducted) combinations, see the MXZ Technical and Service Manual.

Electrical Power Requirements		208 / 230V, 1-Phase, 60 Hz
Minimum Circuit Ampacity (MCA)	A	1
Blower Motor (ECM)	F.L.A.	0.76
Blower Motor Output	W	55
Field Drainpipe Size O.D.	In.(mm)	5/8 (15)

Airflow Rate (Quiet - Lo - Med - Hi - Super Hi)			
Cooling	DRY	CFM	388-469-544-628-738
	WET		347-420-487-562-661
Heating	DRY		388-469-544-628-738

Sound Pressure Level (Quiet - Lo - Med - Hi - Super Hi)		
Cooling	dB(A)	34-41-45-49-53
Heating		32-41-45-49-52

External Dimensions (H x W x D)	In.(mm)	12-13/16 x 43-5/16 x 9-3/8 (325 +17 x 1,100 x 238)
Net Weight	Lbs.(kg)	37 (17)
External Finish		Munsell 1.0Y 9.2 / 0.2

Refrigerant Piping (Flared)		
Liquid (High Pressure)	In.(mm)	3/8 (9.52)
Gas (Low Pressure)		5/8 (15.88)

ACCESSORIES:

Indoor Unit

- ☐ Condensate Pump (BlueDiamond X87-711/721; 115/230V)
- ☐ Condensate Pump (Sauermann SI30-115/230; 115/230V)
- ☐ Anti-Allergy Enzyme Filter (MAC-408FT-E)
- ☐ Platinum Catalyst Deodorizing Filter (MAC-308FT-E)
- ☐ Drain Pan Level Sensor (DPLS2)

Controls

- ☐ Wireless Controller (MHK1)
- ☐ Wireless Interface for kumo cloud ™ (PAC-WHS01WF-E)
- ☐ Thermostat Interface (PAC-US444CN-1)

DIMENSIONS: MSZ-GL24NA-U1

Inspections Division
Date: 02/01/17

MSZ-GL24NA-U1

Unit: in. (mm)

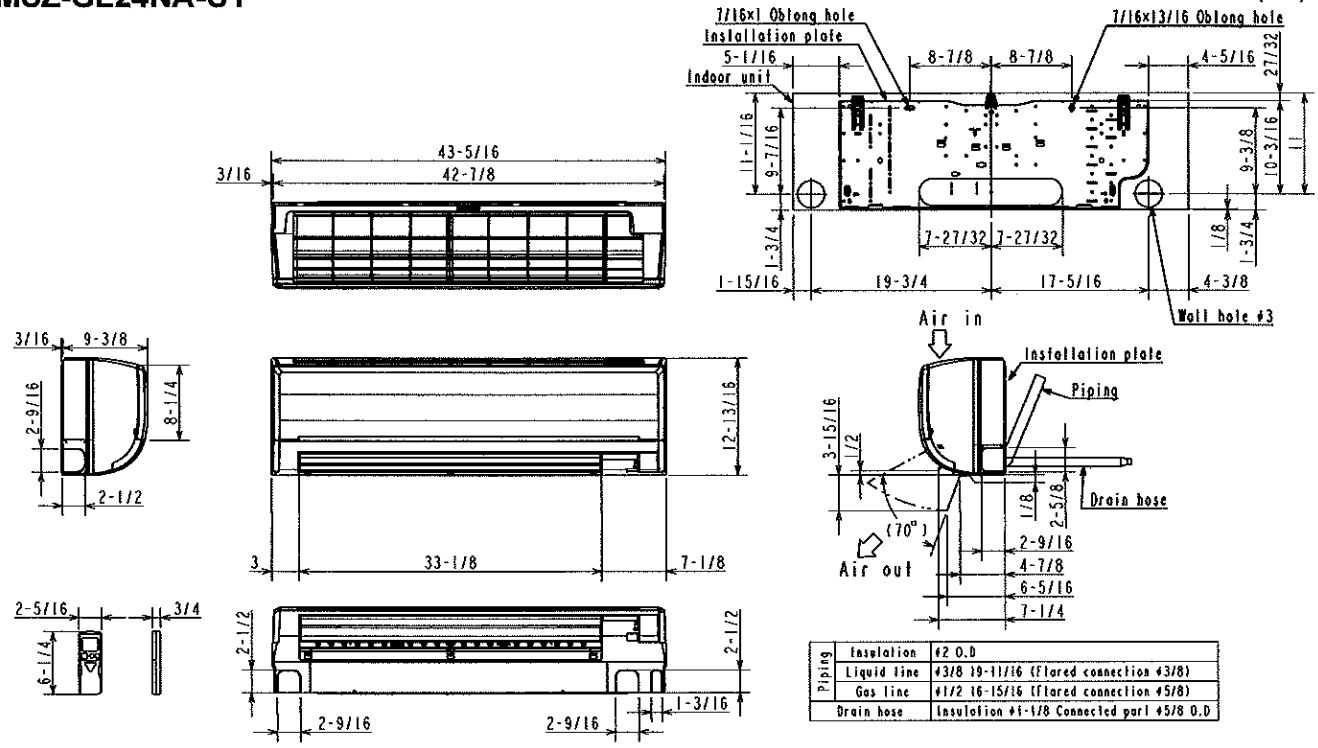

Piping	Insulation	ø2 O.D
	Liquid line	ø3/8 19-11/16 (Flared connection ø3/8)
	Gas line	ø1/2 16-15/16 (Flared connection ø5/8)
Drain hose		Insulation ø1-1/8 Connected part ø5/8 O.D

MITSUBISHI ELECTRIC

COOLING & HEATING

1340 Satellite Boulevard. Suwanee, GA 30024
Toll Free: 800-433-4822 www.mehvac.com

Inspections Division
Date: 02/01/17

THE GRANITE GROUP — SOLID AS OUR NAME

The Granite Group — Residential Heat Loss Version 3.4

Date 9/30/2016

Customer	Job Name	Calculation Done By	Quote #
DALES BURNER	MARTY COLLARTA	BOB S	93016

Infil. Factors: 1 OW = .012, 2 OW = .016, 3 OW = .027, ENTRY = .036

Room	Bath?	DTD	BB BTU	Wall	Glass	Roof	Floor	Slab	Height	Width	Length	Exp Length	SQFT W/D	SQFT Roof	SQFT Flr	Slab Edge	Infil Factor	Net Wall	SQ FT	Room BTU	BSBD Length
IN GARAGE	N	85	1	0.05	0.5	0.03	0.05	0.69	10	15	80	60	357	1200	1200	0	0.018	243	1200	42725	42726.00
OFFICE2?	N	85	1	0.05	0.5	0.03	0.05	0.69	10	12.75	60	73	12	765	765	0	0.012	718	765	16567	16567.00
		90	550	0.05	0.65	0.05	0.05	0.69						0	0			0	0	0	0.00
		90	550	0.05	0.65	0.05	0.05	0.69						0	0			0	0	0	0.00
		90	550	0.05	0.65	0.05	0.05	0.69						0	0			0	0	0	0.00
		90	550	0.05	0.65	0.05	0.05	0.69						0	0			0	0	0	0.00
		90	550	0.05	0.65	0.05	0.05	0.69						0	0			0	0	0	0.00
		90	550	0.05	0.65	0.05	0.05	0.69						0	0			0	0	0	0.00
		90	550	0.05	0.65	0.05	0.05	0.69						0	0			0	0	0	0.00
		90	550	0.05	0.65	0.05	0.05	0.69						0	0			0	0	0	0.00
		90	550	0.05	0.65	0.05	0.05	0.69						0	0			0	0	0	0.00
		90	550	0.05	0.65	0.05	0.05	0.69						0	0			0	0	0	0.00
		90	550	0.05	0.65	0.05	0.05	0.69						0	0			0	0	0	0.00
		90	550	0.05	0.65	0.05	0.05	0.69						0	0			0	0	0	0.00
		90	550	0.05	0.65	0.05	0.05	0.69						0	0			0	0	0	0.00
		90	550	0.05	0.65	0.05	0.05	0.69						0	0			0	0	0	0.00
		90	550	0.05	0.65	0.05	0.05	0.69						0	0			0	0	0	0.00
		90	550	0.05	0.65	0.05	0.05	0.69						0	0			0	0	0	0.00
		90	550	0.05	0.65	0.05	0.05	0.69						0	0			0	0	0	0.00
		90	550	0.05	0.65	0.05	0.05	0.69						0	0			0	0	0	0.00
		90	550	0.05	0.65	0.05	0.05	0.69						0	0			0	0	0	0.00
																		Totals	1965	59292	59293.00

dling Summary: Summarizes previous variables below

	DTD	BB BTU	Wall	Glass	Roof	Floor	Slab		Net Wall	Glass	Roof	Floor	Slab
Total SQFT									963	2369	1965	1965	0
Total Component Btu	90	550	0.05	0.65	0.05	0.05	0.69		4324.5	21586.5	8842.5	8842.5	0

Total BTU/per SQFT 30

itional Notes:

SET OF 2014 PLANS—BUT NO R-VALUES

CAN ONLY ASSUME—R-19 WALLS AND R-38 ATTIC—YOU NEED TO DOUBLE CHEC