1. PROVIDE LATERAL BRACING FOR INDIVIDUAL TRUSS MEMBERS AS REQUIRED BY APPROVED SHOP DRAWINGS. MINIMUM BRACING IS 2"x4"

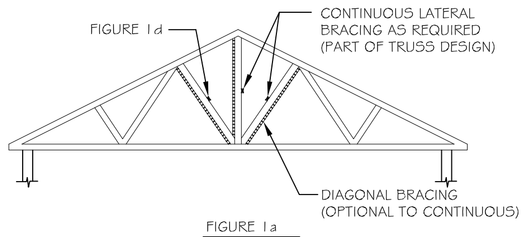

FIGURE 1a

2. PROVIDE DIAGONAL BRACING AT END WALLS OR INTERMEDIATE LOCATIONS TO PREVENT MULTIPLE BUCKLING OF COMPRESSION MEMBERS HAVING "CONTINUOUS" LATERAL BRACING.

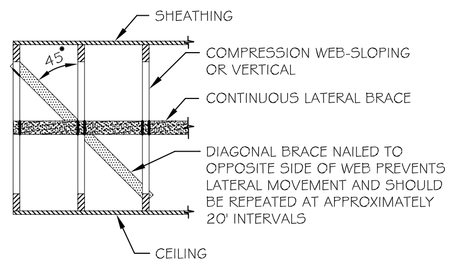

FIGURE 1d

3. PROVIDE TEMPORARY BRACING FOR TOP CHORD OF TRUSSES UNTIL PLYWOOD SHEATHING CAN BE INSTALLED.

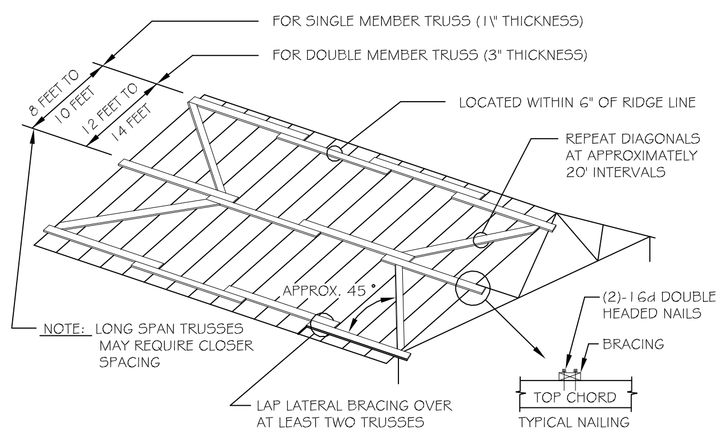

FIGURE 3a

4. PROVIDE PERMANENT DIAGONAL BRACING FOR WEB MEMBERS WHICH HAVE CONTINUOUS LATERAL BRACING.

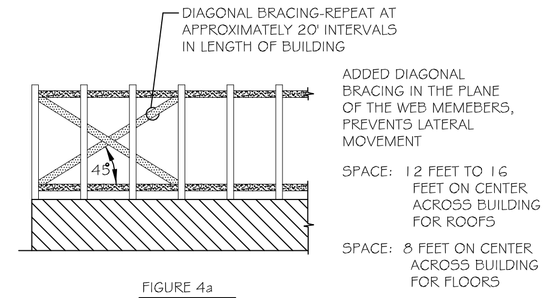

FIGURE 4a

5. PROVIDE PERMANENT CONTINUOUS LATERAL AND DIAGONAL BRACING FOR BOTTOM CHORDS OF TRUSSES. PROVIDE ONE COMPLETE BAY OF DIAGONAL BRACING AT EACH END OF BUILDING AND ONE ADDITIONAL ROW AT MIDPOINT OF BUILDING. MAXIMUM SPACING FOR CONTINUOUS LATERAL BRACING SHALL NOT EXCEED 10' ON CENTER.

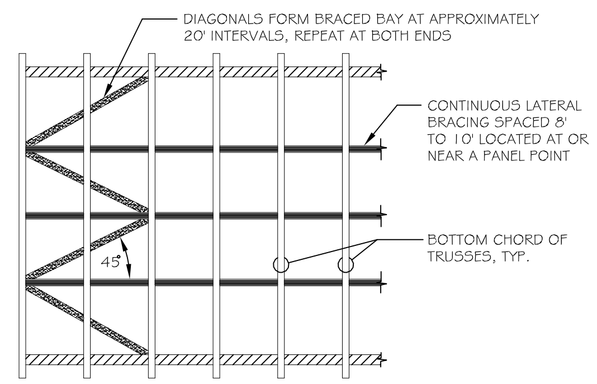

FIGURE 5

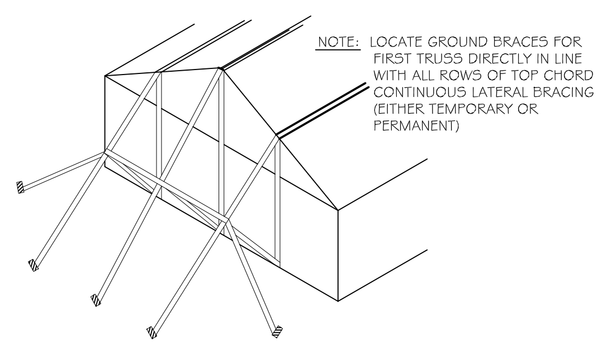

FIGURE 2a

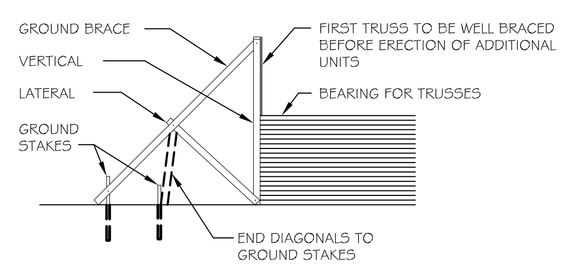

FIGURE 2b

NOTES:

1. DURING TRUSS ERECTION, THE BUILDER OR ERECTION CONTRACTOR MUST TAKE ADEQUATE PRECAUTIONS TO ASSURE THAT THE WOOD TRUSSES ARE NOT STRUCTURALLY DAMAGED. PROPER RIGGING, INCLUDING THE USE OF SPREADER BARS AND MULTIPLE PICK-UP POINTS, WHERE REQUIRED, IS NECESSARY TO PREVENT DAMAGE DURING HANDLING, TENTATIVE RECOMMENDATIONS IN THE APPENDIX HERETO.
2. IT IS MOST IMPORTANT TO BRACE THE FIRST TRUSS AT THE END OF THE BUILDING SECURELY. ALL OTHER TRUSSES ARE TIED TO THE FIRST TRUSS, THUS THE BRACING SYSTEM DEPENDS TO A GREAT EXTENT ON HOW WELL THE FIRST TRUSS IS BRACED.
3. ONE SATISFACTORY METHOD IS FOR THE FIRST TRUSS TOP CHORD TO BE BRACED TO A STAKE DRIVEN INTO THE GROUND AND SECURELY ANCHORED. THE GROUND BRACE ITSELF SHOULD BE SUPPORTED AS SHOWN IN FIGURE 2 OR IT IS APT TO BUCKLE. ADDITIONAL GROUND BRACES, IN THE OPPOSITE DIRECTION, INSIDE THE BUILDING ARE ALSO RECOMMENDED.

LATERAL TRUSS BRACING DETAILS

N.T.S.

WOOD TRUSS NOTES:

1. DESIGN CODES:
   A. NATIONAL DESIGN SPECIFICATIONS FOR WOOD CONSTRUCTION BY THE NATIONAL FOREST PRODUCTS ASSOCIATION.
   B. DESIGN SPECIFICATION FOR LIGHT METAL PLATE CONNECTED WOOD TRUSSES (ANSI/TPI 1-1995).
2. TRUSS MEMBERS: NO. 2 OR BETTER, 15% MAXIMUM MOISTURE CONTENT.
3. TRUSS TEMPORARY BRACING: COMPLY WITH "COMMENTARY AND RECOMMENDATIONS - HANDLING, INSTALLING AND BRACING METAL PLATE CONNECTED WOOD TRUSSES": (HIB-91). TRUSSES ARE NOT STABLE AND REQUIRE TEMPORARY SUPPORT UNTIL TOP CHORD PLYWOOD AND PERMANENT BRACING ARE INSTALLED.
4. TRUSS PERMANENT BRACING: INSTALL PERMANENT BRACING IN ACCORDANCE WITH BCSI 2008, MAY EDITION, "GUIDE TO GOOD PRACTICE FOR HANDLING, INSTALLING, RESTRAINING AND BRACING OF METAL PLATE CONNECTED WOOD TRUSSES" AND AS FOLLOWS:
   A. PERMANENT BRACING REQUIRED BY TRUSS DESIGN ♦ SPECIFIED BY BCSI: PROVIDE 2x4 CONTINUOUS LATERAL BRACING AND DIAGONAL BRACING AT ALL CONTINUOUS LATERAL BRACE LOCATIONS REQUIRED BY THE TRUSS FABRICATOR. PROVIDE DIAGONAL BRACING AS SHOWN IN DIAGRAMS INCLUDED IN BCSI-B3 AT EACH END OF EACH WING OF THE BUILDING AND AT INTERVALS NOT TO EXCEED 20 FEET.
   B. PERMANENT BOTTOM CHORD BRACING: PROVIDE 2x4 CONTINUOUS LATERAL BRACING AT 8-10 FOOT (MAXIMUM) INTERVALS (AT ALL PANEL POINTS) ALONG LENGTH OF TRUSS. PROVIDE DIAGONAL BRACING AS SHOWN IN DIAGRAMS INCLUDED IN BCSI-B3 AT EACH END OF EACH WING OF THE BUILDING AND AT INTERVALS NOT TO EXCEED 20 FEET.
   C. PERMANENT WEB MEMBER BRACING: PROVIDE 2x4 CONTINUOUS LATERAL BRACING AT TOP AND BOTTOM OF TRUSSES AND DIAGONAL BRACING AT INTERIOR LINES OF SUPPORT AND AT 16 FOOT (MAXIMUM) INTERVALS ALONG THE LENGTH OF THE TRUSS AS SHOWN IN DIAGRAMS INCLUDED IN BCSI-B3. PROVIDE DIAGONAL BRACING AT EACH END OF WING OF THE BUILDING AND AT INTERVALS NOT TO EXCEED 20 FEET.
   D. PERMANENT TOP CHORD BRACING IS NOT REQUIRED FOR FULLY SHEATHED ROOFS ONLY. ROOF SYSTEMS WITH PURLINS REQUIRE DIAGONAL BRACING AS INDICATED IN BCSI. ADEQUATE BRACING IS PROVIDED BY ROOF PLYWOOD.
   E. PROVIDE CONSTRUCTION GRADE OR BETTER GRADE 2x4's, NO. 2 OR BETTER 2x6's FOR BRACING. CONNECT BRACING TO TRUSS WITH AT LEAST 2-16d NAILS. LAP SPLICE CONTINUOUS MEMBERS OVER AT LEAST 2 TRUSSES.
5. PERMANENT SYSTEM BRACING:
   5.1. PROVIDE PERMANENT BRACING SYSTEM AND TEMPORARY INSTALLATION BRACING SYSTEM, IN COMPLIANCE WITH DSB-89 AND TPI BCSI WHEN TABULATED SPACINGS AND LOCATIONS ARE PROVIDED. FOR ALL OTHER SYSTEMS PROVIDE A STAMPED ENGINEERS PLAN SHOWING ALL BRACING DESIGN REQUIREMENTS.
   5.2. DESIGN BRACING FOR TRUSSES IN EXCESS OF 60' SPANS AND/OR TRUSSES THAT REQUIRED ENGINEERS DESIGN IN ACCORDANCE WITH DSB-89. SUBMITT BRACING DESIGN CALCULATIONS WITH SHOP DRAWING SUBMITTAL.

TRUSS DESIGN NOTES:

1. SEE GENERAL NOTES FOR DESIGN LOADS.
2. TRUSS MANUFACTURER:
   2.1 DESIGN: COMPLY WITH ANSI / TPI 2007 FOR IBC 2009.
   2.2 MATERIALS: USE SPF NO. 2 OR BETTER FOR ALL CHORDS, WEBS, AND BRACING
   2.3 TRUSS PLATES: G60 GALVANIZED
   2.3 SHOP DRAWINGS: SUBMIT ELECTRONIC COPIES OF PE STAMPED TRUSS DESIGN CALCULATIONS AND ERECTION LAYOUT DRAWINGS TO STRUCTURAL ENGINEER
   2.4 ERECTION TO COMPLY WITH BCSI-08.
3. PROVIDE TRUSS ANCHORS, HOLDDOWN CLIPS AND METAL FRAMING SUPPORTS AS REQUIRED TO SUPPORT THE LOADS SHOWN, UNO.

A3 CONSTRUCTION NOTES
SCALE: NTS

C2

C1

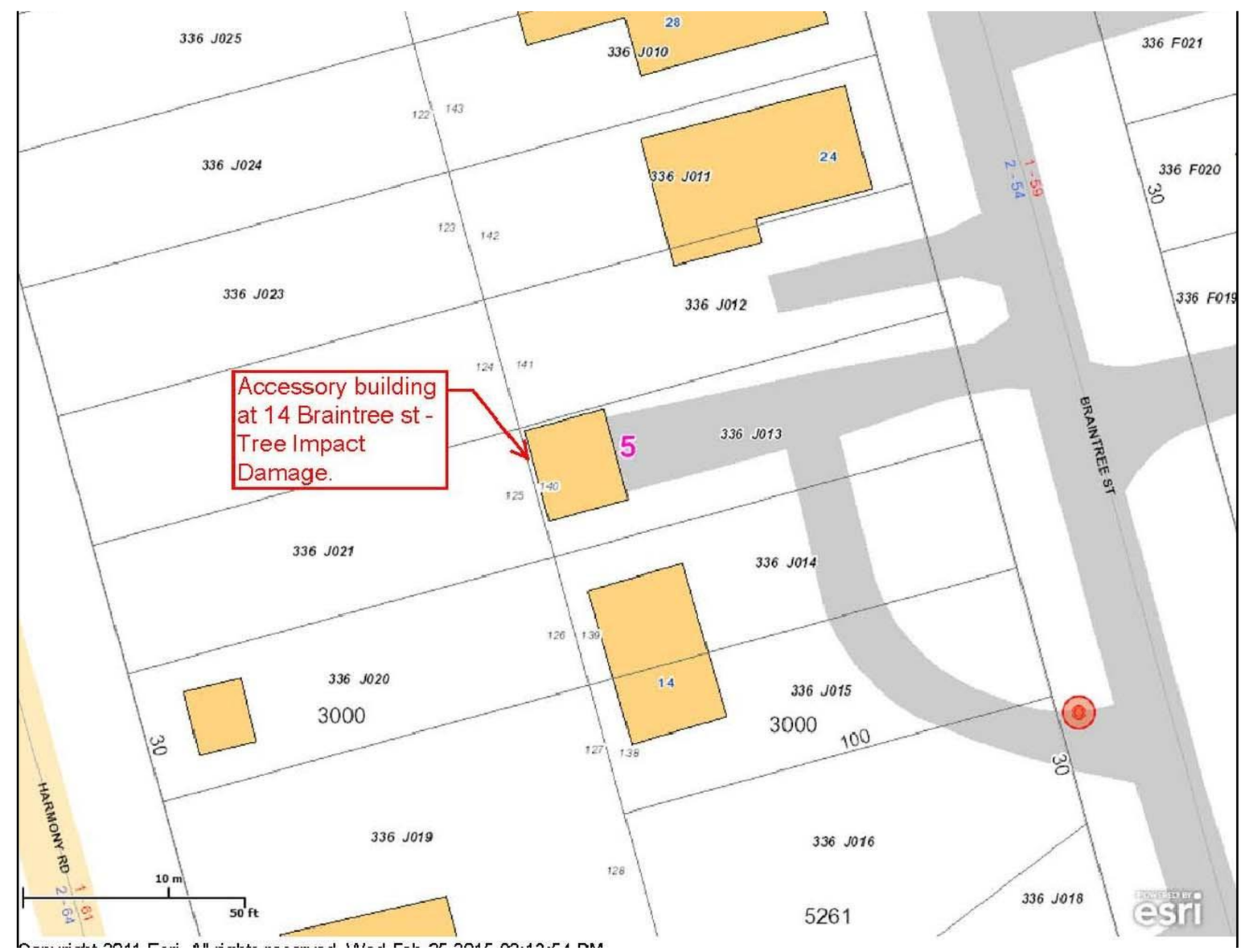

A2 PLOT PLAN
SCALE: NTS

STATE OF MAINE AARON S. WILSON No. 10429 LICENSED PROFESSIONAL ENGINEER

ASSOCIATED DESIGN PARTNERS INC.
80 Leighton Road
Falmouth, Maine 04105
Office: (207) 878-1751
Fax: (207) 878-1788
E-Mail: adp@adpengineering.com

THIS DRAWING, DESIGN AND ELECTRONIC FILE ARE THE PROPERTY OF ASSOCIATED DESIGN PARTNERS, INC. THE REPRODUCTION, COPYING OR ANY OTHER USE OF THIS DOCUMENT WITHOUT WRITTEN CONSENT IS PROHIBITED.

PROJECT: SAMSON STORAGE STRUCTURE
PORTLAND, MAINE
FOR:
SHEET TITLE: TRUSS BRACING NOTES AND DETAILS
ISSUED FOR PERMITTING

REVISIONS

No.	BY	DESCRIPTION	DATE
1	ASW	ADDED PLOT PLAN	2/25/15
2			
3			
4			
5			
6			
7			
8			

DATE : 1-26-15
SCALE : AS NOTED
DESIGN BY: ASW
DRAWN BY: RSC
FILE #: 14414-A101.DWG
PROJECT NUMBER: 14414
SHEET NO: A2