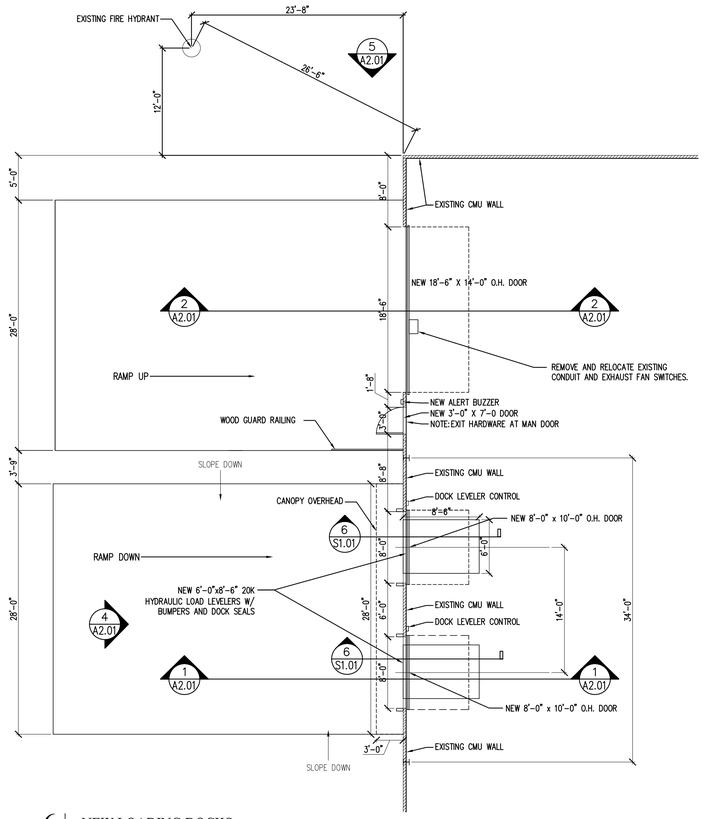

6 | NEW LOADING DOCKS
SCALE: 1/8"=1'-0"

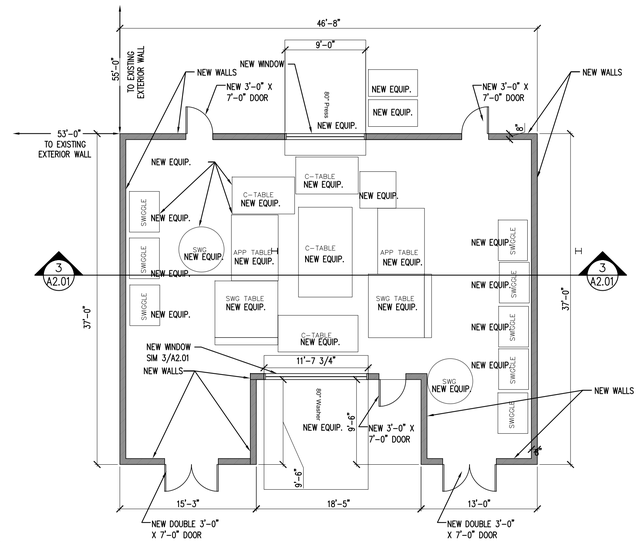

5 | NEW GLASS PREP ROOM
SCALE: 1/8"=1'-0"

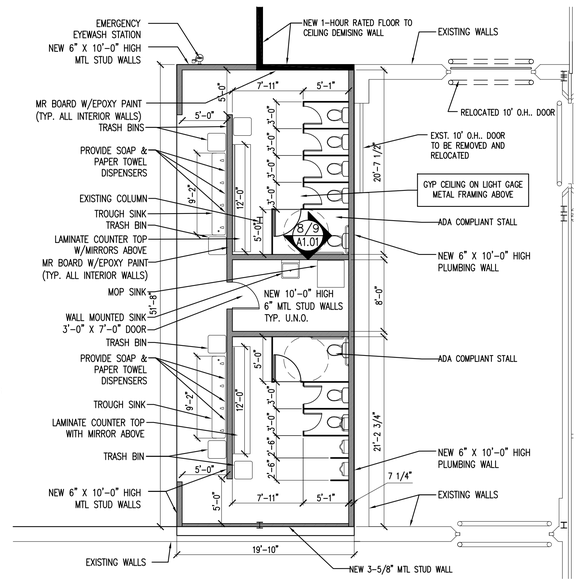

4 | NEW RESTROOMS
SCALE: 1/8"=1'-0"

LEGEND:

BUILDING SECTION	X / AXX
WALL SECTION	X / AXX
SECTION DETAIL	X / AXX
PLAN DETAIL	X / AXX

NEW WALL - STUD & GYP. BD. RE: PLAN NOTES	
EXISTING STUD WALL	
EXISTING CMU WALL W/ SANDWICH PANEL ABOVE	
DEMO AND REMOVE	

NOTE: SEE A0.00 FOR CODE REQUIREMENTS AND A0.01 FOR LIFE SAFETY PLAN WITH LOCATION OF EMERGENCY LIGHTING, EXIT SIGNAGE, RELATED EQUIPMENT AND EGRESS DISTANCES.

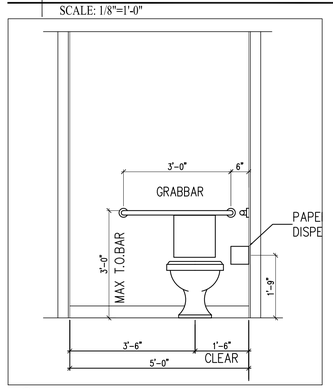

8 | RESTROOM ELEVATION
SCALE: 1/2"=1'-0"

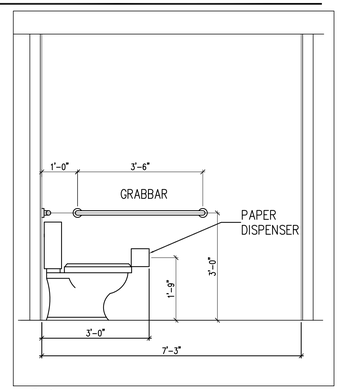

9 | RESTROOM ELEVATION
SCALE: 1/2"=1'-0"

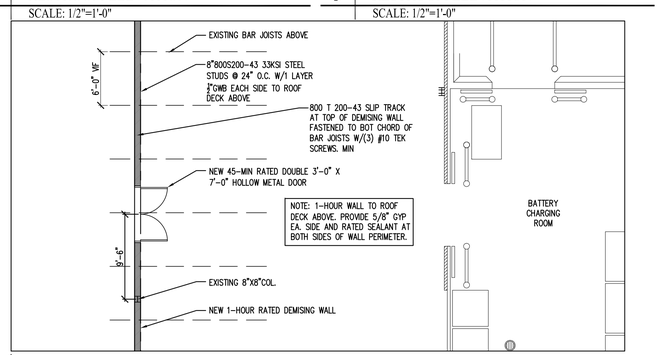

3 | NEW 45-MIN. DOOR @ 1-HOUR RATED DEMISING WALL
SCALE: 1/8"=1'-0"

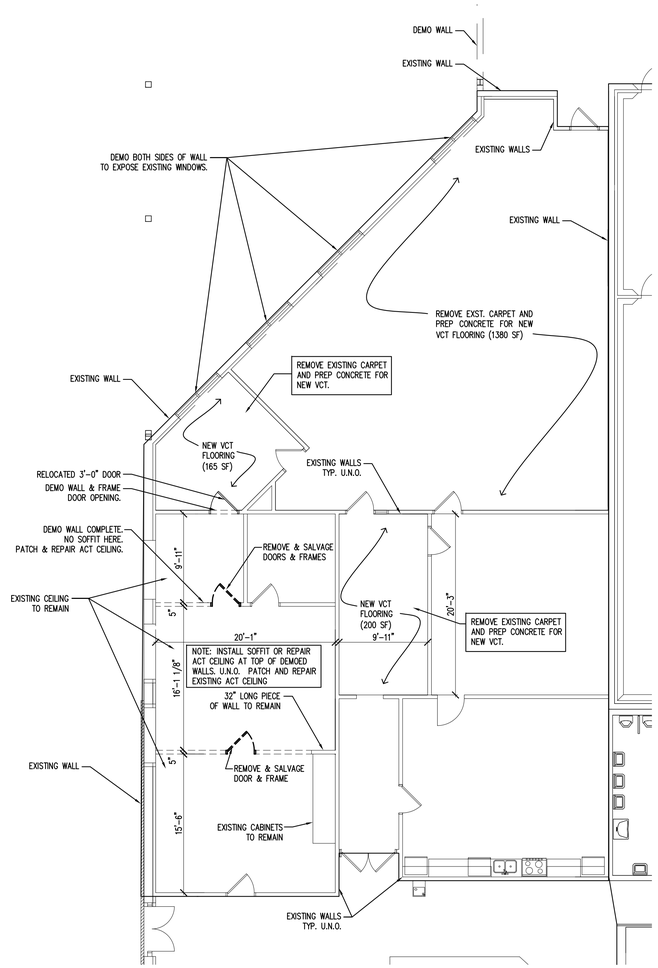

2 | OFFICES
SCALE: 1/8"=1'-0"

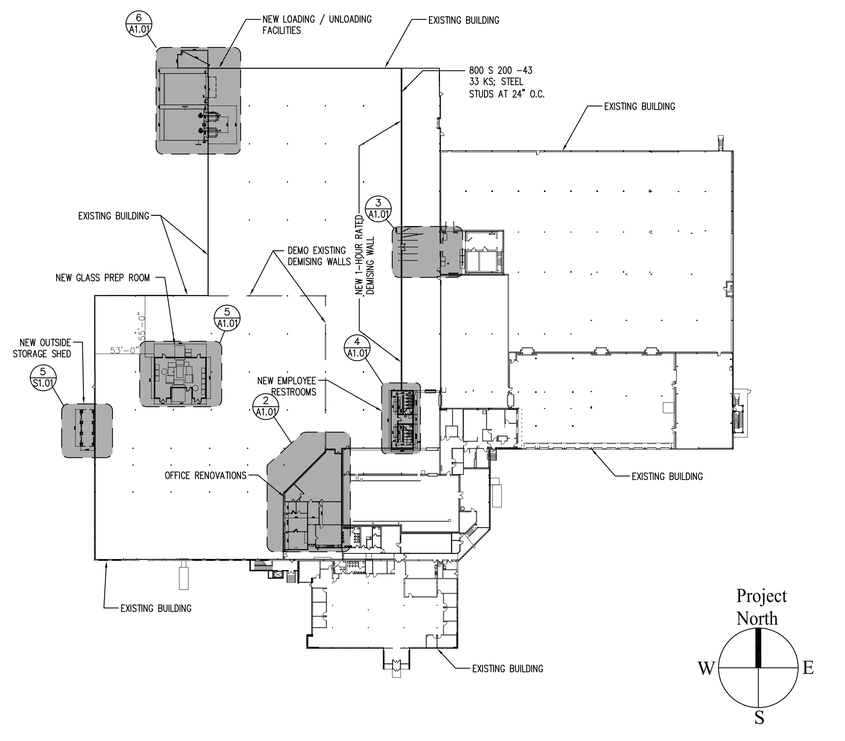

1 | KEY PLAN
SCALE: 1/64"=1'-0"

1' 1/2' 0 1'
SCALE: 1" = 1'

REGISTERED ARCHITECT WILLIAM KENNETH HOPKINS No. 1050 STATE OF MAINE

Prepared For:
Paradigm Windows
400 Riverside Industrial Parkway
Portland, Maine 04103

Consulting Engineer:
Structural Engineer:
Structural Integrity
Consulting Engineers, Inc.
77 Oak Street
Portland, ME
(207) 774-4614

Architect:
ARCHETYPE architects
48 Union Wharf Portland, Maine 04101
(207) 772-6022 Fax (207) 772-4056

Project:
PARADIGM WINDOWS RELOCATION
56 Milliken Street
Portland, ME 04103

Revisions:

Scale: AS NOTED
Date: 23 JULY 2013

FIRST FLOOR PLAN

A1.01