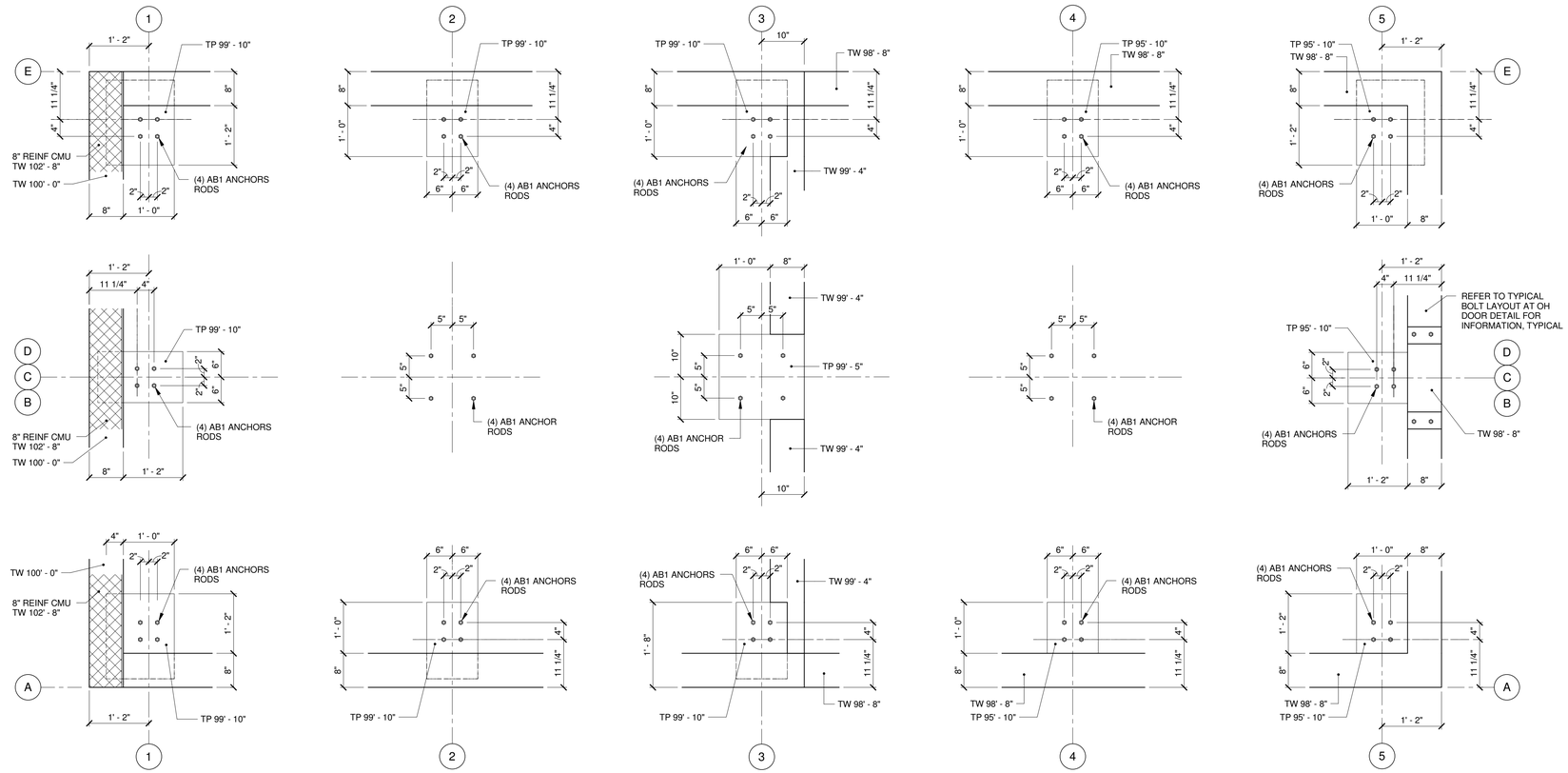

ANCHOR ROD LAYOUT PLAN

3/4" = 1'-0"

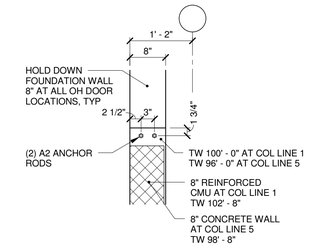

TYP BOLT LAYOUT AT OHD

3/4" = 1'-0"

PLAN NOTES:

1. REFER TO DRAWING S-001 FOR DESIGN INFORMATION AND GENERAL NOTES PERTAINING TO FOUNDATIONS, CONCRETE, AND REINFORCING STEEL.
2. PROJECT REFERENCE ELEVATION AT GRADE LEVEL = 100'-0"
3. ANCHOR ROD LAYOUT PLAN IS BASED ON THE PRE-ENGINEERED METAL BUILDING DRAWINGS FROM "STAR BUILDING SYSTEMS", JOB NO. 15-B-70493, DATED 03/06/17. CONTRACTOR TO REPORT ANY DEVIATIONS FROM THE STRUCTURAL DRAWINGS IN WRITING TO THE SER BEFORE PROCEEDING WITH THE WORK.

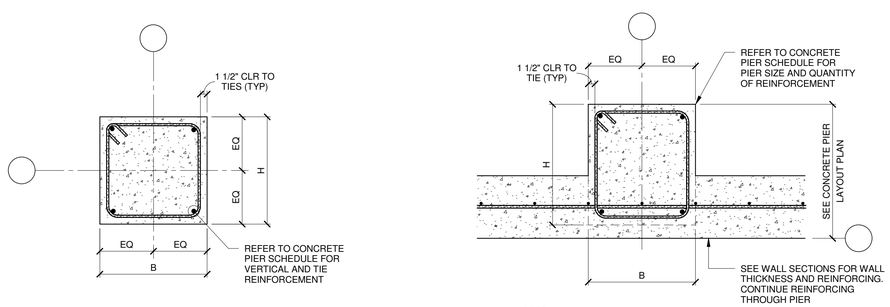

NOTES:

1. ADD 3 ADDITIONAL TIES SPACED AT 3" FROM TOP OF PIER
2. PROVIDE STANDARD HOOKS AT TOP OF VERTICAL BARS IN PIERS LOCATED WITHIN BRACED BAYS

1 4 BAR PIER REINFORCEMENT

NOT-TO-SCALE

NOTES:

1. ADD 3 ADDITIONAL TIES SPACED AT 3" oc AND 3" FROM TOP OF PIER
2. PROVIDE STANDARD HOOKS AT TOP OF VERTICAL BARS IN PIERS LOCATED WITHIN BRACED BAYS

2 PIER REINFORCEMENT LAYOUT AT WALL SIDE

NOT-TO-SCALE

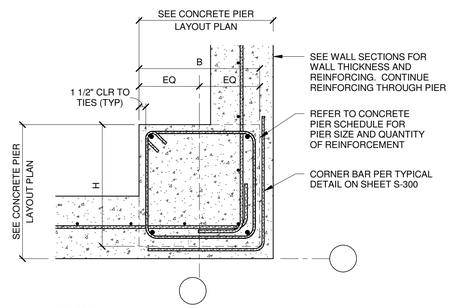

NOTES:

1. ADD 3 ADDITIONAL TIES SPACED AT 3" oc AND 3" FROM TOP OF PIER
2. PROVIDE STANDARD HOOKS AT TOP OF VERTICAL BARS IN PIERS LOCATED WITHIN BRACED BAYS

3 PIER REINFORCEMENT LAYOUT AT WALL CORNER

NOT-TO-SCALE

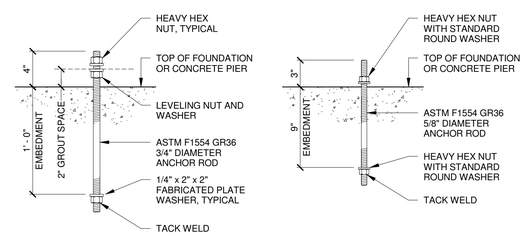

AB1 AB2

4 ANCHOR ROD DETAIL

1 1/2" = 1'-0"

base design group, inc.
94 Auburn Street - Unit 206, Portland, Maine 04103
t: 207.553.2070 - f: 207.553.2072
www.basedesigngroup.com

Key Plan

Sheet Issue / Revision

No.	Date	Description
1	03/28/2017	Owner Review Set
2	04/17/2017	Permit Set

Seal/Signature

STATE OF MAINE
MIGUEL BETANCOURT
No. 14038
LICENSED
PROFESSIONAL ENGINEER

Project

UNIT 15
1039 RIVERSIDE STREET
PORTLAND, MAINE

Client

HardyPond Construction
Portland, Maine

Title

CONCRETE PIER DETAILS

Project Number 17042-0

Drawn By MB

Checked By MB

S-301

Scale As indicated