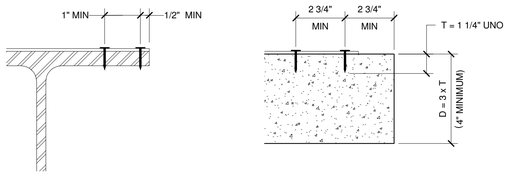

NOTE:

1. MINIMUM SPACING AND EDGE DISTANCE FOR POWDER ACTUATED FASTENERS BASED ON FASTENER INFORMATION FROM HILTI, INC.

1 MINIMUM DISTANCES FOR POWDER ACTUATED FASTENERS
NOT-TO-SCALE

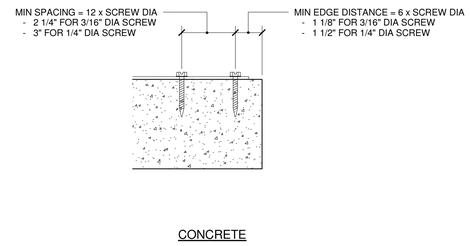

NOTE:

1. MINIMUM SPACING AND EDGE DISTANCE FOR KWIK-CON II SCREW FASTENER BASED ON FASTENER INFORMATION FROM HILTI, INC.

2 MINIMUM DISTANCES FOR CONCRETE SCREW FASTENERS
NOT-TO-SCALE

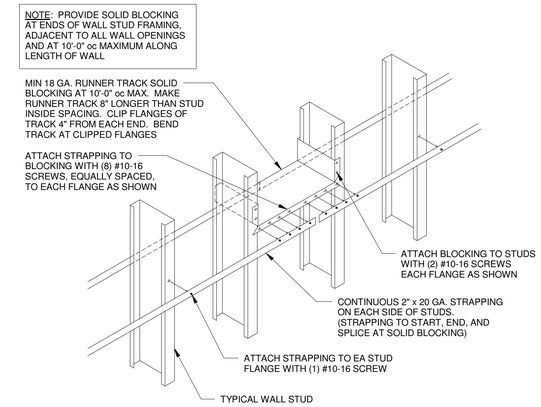

3 FLAT STRAP BRIDGING AT WALL STUDS
NOT-TO-SCALE

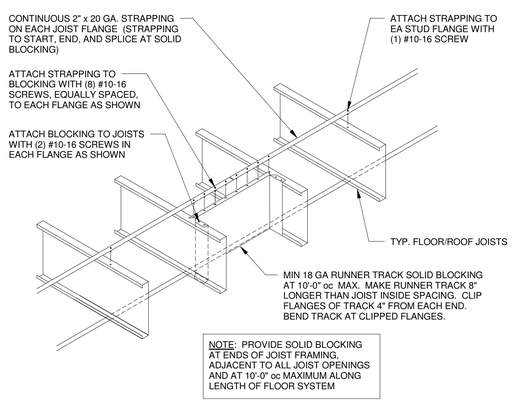

4 FLAT STRAP BRIDGING AT FLOOR/ROOF JOIST
NOT-TO-SCALE

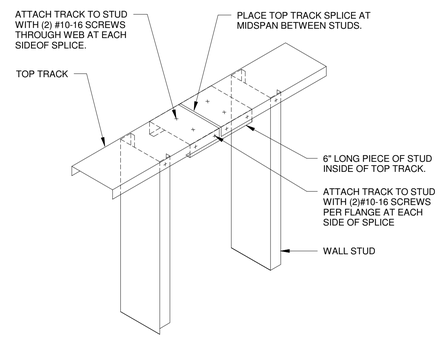

NOTES:

1. DO NOT SPLICE TRACKS (TOP OR BOTTOM) WITHIN 2'-0" OF THE X-BRACE CONNECTION, IF APPLICABLE.
2. DO NOT SPLICE TOP TRACK OVER DOOR ROUGH OPENINGS, IF APPLICABLE.

5 TOP TRACK SPLICE DETAIL
NOT-TO-SCALE

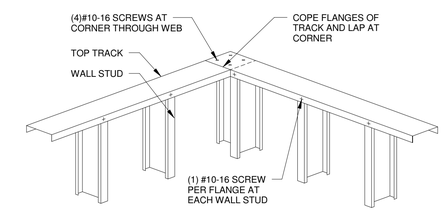

6 TYPICAL CORNER TIE DETAIL
NOT-TO-SCALE

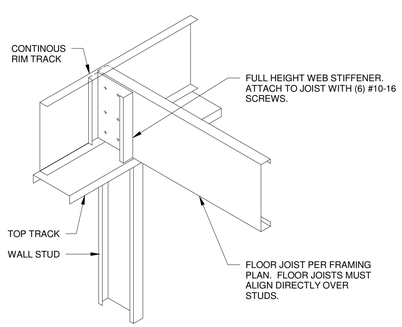

7 TYPICAL JOIST WEB STIFFENER DETAIL
NOT-TO-SCALE

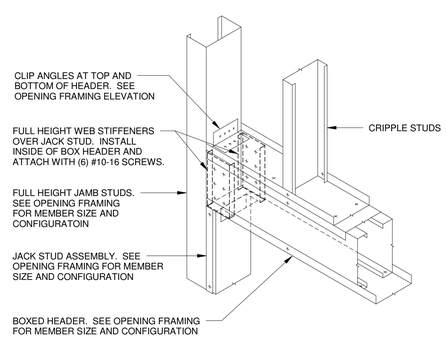

8 BOXED HEADER WEB STIFFENER DETAIL
NOT-TO-SCALE

CITY OF PORTLAND, MAINE — RESURGAM

Reviewed for Code Compliance
Inspections Division
Approved with Conditions

Date: 09/05/17

Key Plan

Sheet Issue / Revision

No.	Date	Description
1	04/27/17	Permit Set

Seal/Signature

STATE OF MAINE — MIGUEL BETANCOURT — No. 14038 — LICENSED — PROFESSIONAL ENGINEER

Project

UNIT 5 - LOADING DOCK
1039 RIVERSIDE STREET
PORTLAND, MAINE

Client

HardyPond
Construction
Portland, Maine

Title

TYPICAL
COLD-FORMED
STEEL DETAILS

Project Number: 17068-0

Drawn By: Author

Checked By: Checker

S-500

Scale: As indicated