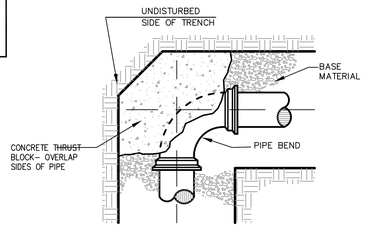

NOTE: KEEP CONCRETE CLEAR OF PIPE JOINT, NUTS AND BOLTS

PLAN VIEW

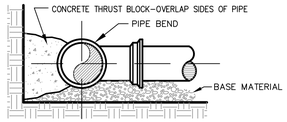

SECTION

THRUST/RETAINER GLAND SCHEDULE		
1/4 BEND	(90°)	USE POURED-IN-PLACE THRUST BLOCK WITH GRIPRING™ MECHANICAL JOINT RESTRAINT
1/8 BEND	(45°)	THRUST BLOCK w/ GRIPRING™
1/16 BEND	(22 1/2°)	THRUST BLOCK w/ GRIPRING™
1/32 BEND	(11 1/4°)	THRUST BLOCK w/ GRIPRING™

THE ABOVE SCHEDULE IS SUBJECT TO THE APPROVAL OF THE ON-SITE INSPECTOR DUE TO SOILS AND WORKING PRESSURES IN THE AREA.

NOTES:

1.) THE PORTLAND WATER DISTRICT MAY HAVE INSPECTION FEES AND REQUIRE OBSERVATION OF ALL PIPING INSTALLATION BEFORE BURIAL. REFER TO SPECIFICATIONS.

2.) REFER TO PORTLAND WATER DISTRICT SPECIFICATIONS FOR TESTING AND CHLORINATION REQUIREMENTS.

3.) ALL HYDRANTS AND VALVES TO BE EPOXY COATED, NUTS & BOLTS TO BE STAINLESS STEEL.

4.) SERVICE RODS FOR DOMESTIC SERVICE OR AIR VALVES TO BE STAINLESS STEEL.

(A) TYPICAL THRUST BLOCK PLACEMENT BENDS
N.T.S.

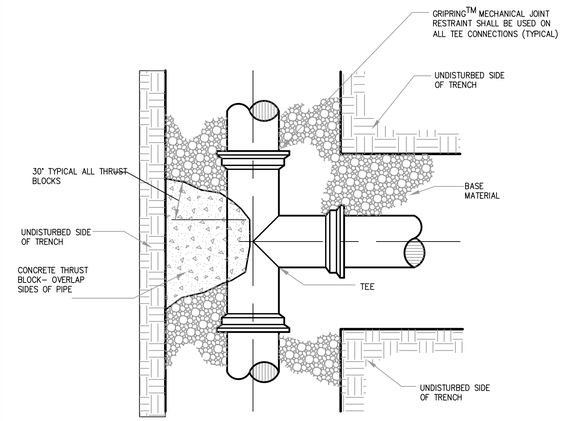

PLAN VIEW

NOTE: KEEP CONCRETE CLEAR OF PIPE JOINT, NUTS AND BOLTS

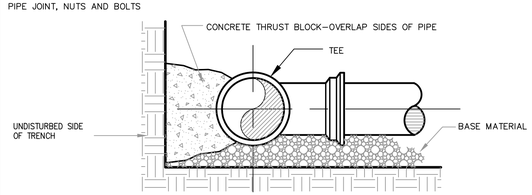

(C) TYPICAL THRUST BLOCK PLACEMENT ON TEES
N.T.S.

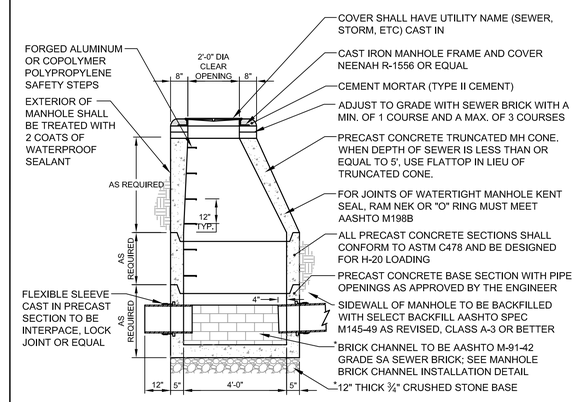

NOTE:
CHANNEL MAY ALSO BE A PREFABRICATED FIBERLINER 2000 CHANNEL AS FABRICATED BY GDT, INC. OF ESSEX, CT OR EQUAL

(E) 4'-0" PRECAST SANITARY SEWER AND STORM DRAIN MANHOLE
N.T.S.

I.D.	W	C
4'-0"	5"	8"
5'-0"	6"	8"
6'-0"	6"	8"
6'-8"	4"	8"
8'-0"	6"	8"

DESIGN NOTES:

1. ALL CONCRETE TO HAVE A MIN. 4,000 PSI COMPRESSIVE STRENGTH AT 28 DAYS
2. DESIGN FOR H-20 WHEEL LOADING
3. CATCH BASIN TO CONFORM TO ASTM-C478 SPECIFICATIONS
4. REINFORCE TO .12 IN. SQ./L.F.

NOTE:
FOR BASE CONSTRUCTION SEE BASE DETAIL

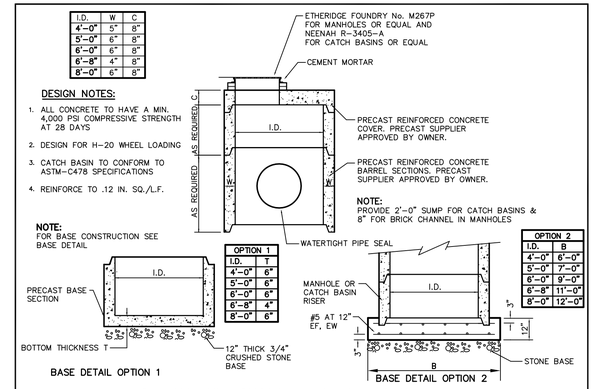

NOTE:
CASCO TRAPS SHALL BE USED ON ALL CATCH BASIN OUTLETS 12" IN DIAMETER AND SMALLER.

OPTION 1	
I.D.	T
4'-0"	6"
5'-0"	6"
6'-0"	6"
6'-8"	4"
8'-0"	6"

OPTION 2	
I.D.	B
4'-0"	6'-0"
5'-0"	7'-0"
6'-0"	9'-0"
6'-8"	11'-0"
8'-0"	12'-0"

BASE DETAIL OPTION 1

BASE DETAIL OPTION 2

(G) LARGE DIAMETER STORM DRAIN MANHOLE AND CATCH BASIN W/ FLAT TOP
N.T.S.

NOTE: THE CONTRACTOR SHALL USE BASE OPTION 2 UNLESS ANTIFLOATATION COMPUTATIONS ARE PROVIDED BY THE CONTRACTOR DEMONSTRATING OPTION 1 CAN BE USED AT THIS SITE. APPROVAL IS SUBJECT TO APPROVAL OF THE ENGINEER.

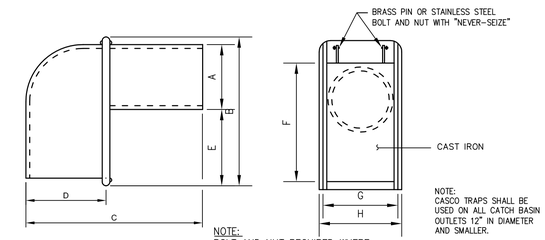

NOTE:
BOLT AND NUT REQUIRED WHERE HOOD WILL NOT OPEN COPMLETELY

SIZE	A	B	C	D	E	F	G	H
6 in.	5 1/2"	13 3/8"	13 3/4"	5 3/8"	5 7/8"	11 5/8"	6 1/2"	7 1/4"
8 in.	7 1/2"	15"	15 3/8"	5 1/2"	5 3/8"	13 3/4"	8 3/4"	9 3/8"
10 in.	9 1/2"	16"	16 1/4"	6"	4 1/2"	14 1/8"	11 1/2"	12 3/8"
12 in.	11 1/2"	17"	22"	8"	3 1/2"	17"	12 1/2"	13 3/8"

(H) CASCO TRAP DETAIL
N.T.S.

1. INSTALL POLY BARRIER BETWEEN PIPE AND ALL THRUST BLOCKS.
2. ANY MODIFICATION TO THRUST BLOCK SIZING OR PIPE RESTRAINT REVISIONS SHALL BE APPROVED IN WRITING BY THE ENGINEER PRIOR TO IMPLEMENTATION IN THE FIELD
3. ANY WORK RELATING TO WATER PIPING OR DETAILS SHALL BE IN ACCORDANCE WITH THE PORTLAND WATER DISTRICT SPECIFICATIONS
4. ALL RESTRAINED JOINTS MUST HAVE GRIPRING TM

BEARING SURFACE REQUIRED IN SQUARE FEET

PIPE SIZE	1/32 BEND	1/16 BEND	1/8 BEND	1/4 BEND	TEES/CAPS
6"/8"	5.0	5.0	5.0	6.5	5.0
12"	11.5	11.5	11.5	20.0	22.0

(B) THRUST BLOCK NOTES
N.T.S.

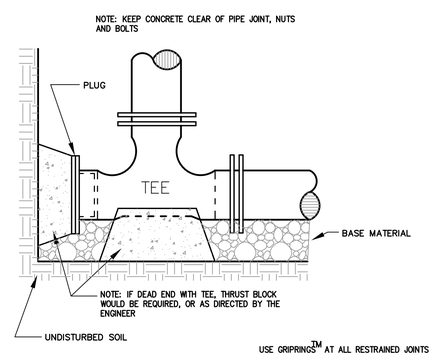

(D) STANDARD TEE BLOCKING
N.T.S.

SEE NOTE 3 IN THRUST BLOCK NOTES DETAIL (B)

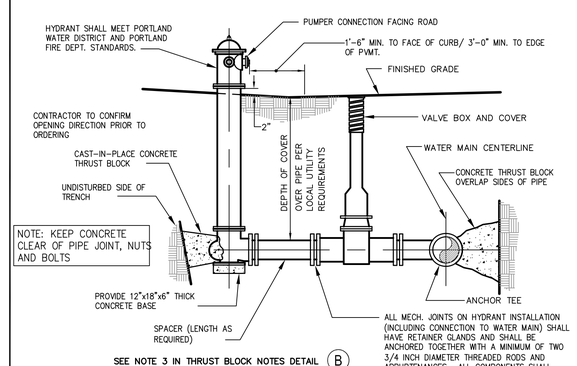

SEE NOTE 3 IN THRUST BLOCK NOTES DETAIL (B)

(F) FIRE HYDRANT INSTALLATION DETAIL
N.T.S.

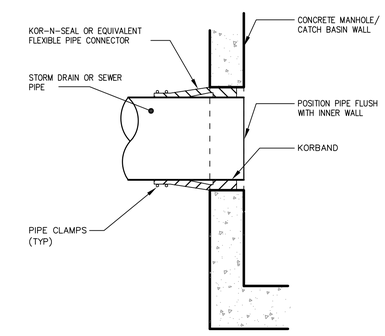

(I) PIPE CONNECTION TO PRECAST CONCRETE SANITARY SEWER AND STORM DRAINAGE STRUCTURE
N.T.S.

PRELIMINARY - NOT FOR CONSTRUCTION

REV	DATE	DESCRIPTION
1	02.25.16	AMENDED SITE PLAN SUBMISSION

REVISIONS

P.E. STEPHEN BUSHEY
LIC. #7429

PROJECT
SECOND TEE CONDOMINIUM ASSOCIATION
BUSINESS PARK EXPANSION - UNIT 2

SHEET TITLE
UTILITY DETAILS

CLIENT
1039 RIVERSIDE LLC

STANTEC CONSULTING SERVICES INC.
778 MAIN ST, SUITE 8
SOUTH PORTLAND, ME 04106
WWW.STANTEC.COM
Stantec

DRAWN:	DED	DATE:	FEB 2016
DESIGNED:	SRB	SCALE:	AS NOTED
CHECKED:	SRB	JOB NO.	195350146
FILE NAME:	SP-M168 DETAILS		
SHEET	C-7		