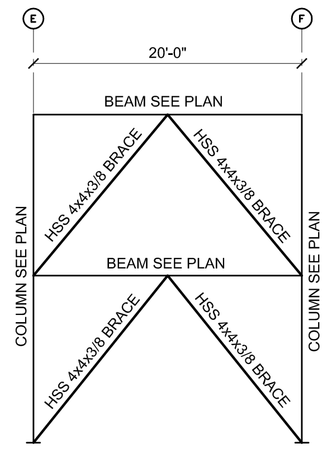

BRACED FRAME LINES 2 AND 10

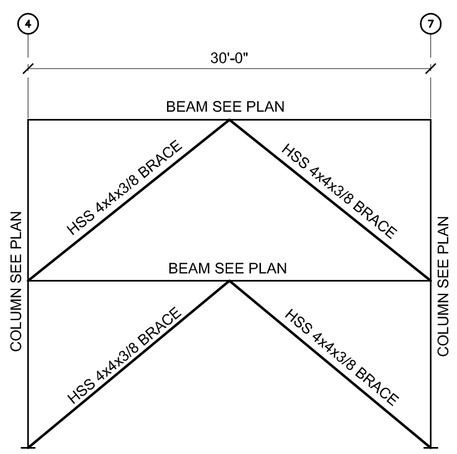

BRACED FRAME LINE H

D1 BRACE SCHEMATICS

MINIMUM WALL REINFORCING SCHEDULE			
Wall Thickness	Number of Rows	Horizontal	Vertical
8"	1 @ mid wall	#4s @ 12"	#4s @ 18"
10"	1 @ mid wall	#4s @ 10"	#4s @ 16"
12"	2	#4s @ 16"	#4s @ 18"
14"	2	#4s @ 14"	#4s @ 18"
16"	2	#4s @ 12"	#4s @ 18"
18"	2	#4s @ 10"	#4s @ 18"
20"	2	#5s @ 14"	#5s @ 18"

COLUMN SCHEDULE	
TYPE	SIZE
C-1	HSS 5x5x1/4
C-2	HSS 6x6x1/4
C-3	HSS 6x6x5/16
C-4	W10x33
C-5	HSS 8x6x3/8
C-6	HSS 4x4x1/4

FOOTING SCHEDULE			
TYPE	SIZE	THICKNESS	REINFORCING
F-1	3'-0" X 3'-0"	12"	5-#4 E.W. BOTTOM
F-2	4'-0" X 4'-0"	12"	9-#4 E.W. BOTTOM
F-3	11'-0" X 11'-0"	12"	13-#9 E.W.; T&B

A1 SCHEDULES

1. PROVIDE & INSTALL MASONRY LINTELS FOR ALL MASONRY WALL OPENINGS UNLESS INDICATED OTHERWISE ON DRAWINGS. PROVIDE MASONRY LINTELS OF SIZE AND REINFORCEMENT AS FOLLOWS:

   A. OPENINGS UP TO 3'-11" (UNLESS OTHERWISE NOTED) — PROVIDE 8" HIGH C.M.U. LINTEL W/ (2) #4 BARS IN 8" WIDE UNITS; (2) #4 BARS IN 6" WIDE UNITS; (3) #4 BARS IN 12" WIDE UNITS

   B. OPENINGS 4'-0" TO 8'-0" (UNLESS OTHERWISE NOTED) — PROVIDE 16" HIGH C.M.U. LINTEL W/ (2) #6 BARS IN 6" WIDE UNITS; (2) #6 BARS IN 8" WIDE UNITS; (3) #6 BARS IN 12" WIDE UNITS

   C. INSTALL FOR ALL OPENINGS AND PENETRATIONS IN BRICK WALLS UP TO 3'-11" WIDE (UNLESS OTHERWISE NOTED). 4"X3 1/2"X 1/4" STEEL ANGLE LINTEL. FOR ALL OPENINGS AND PENETRATIONS BETWEEN 4'-0" AND 8'-0" WIDE (UNLESS OTHERWISE NOTED) (1) 6"X3 1/2"X 1/4" STEEL ANGLE LINTEL.
2. ALL CONCRETE MASONRY AND BRICK LINTELS SHALL HAVE 12" (MIN) END BEARING UNLESS OTHERWISE NOTED.
3. ALL CONCRETE MASONRY BLOCK WALLS WITH VERTICAL REINFORCING, SHALL HAVE CORES FILLED WITH 3000 PSI CONCRETE. INSTALLATION OF REINFORCEMENT SHALL BE CONTINUOUS AND RUN UNOBSTRUCTED BY BAR JOIST SEAT/BEARING PLATE ARRANGEMENTS. HORIZONTAL REINFORCEMENT SHALL BE PROVIDED @ 16" O.C. VERTICALLY.
4. PROVIDE VERTICAL CONTROL, EXPANSION OR CONTRACTION, JOINTS SPACED AT 15'-0" O.C. (MAX) AND LOCATE JOINTS AT EACH SIDE OF DOOR OPENINGS WHERE POSSIBLE FOR ALL INTERIOR MASONRY WALLS. CONTROL JOINTS FOR ALL EXTERIOR MASONRY WALLS WILL BE AS INDICATED IN THIS NOTE OR AS SHOWN ON EXTERIOR ELEVATIONS.
5. OMIT REBAR/GROUTING IN MASONRY CELLS WHICH ARE TO RECEIVE ROOF DRAIN LEADERS, CONDUITS, ETC. REQUIRED REINFORCEMENT SHALL BE INSTALLED IN THE ADJACENT CELL AND SHALL BE GROUTED SOLID.
6. HOLLOW CONCRETE BLOCK UNITS: GRADE N, 1000 PSI, MINIMUM COMPRESSIVE STRENGTH. WALL DESIGN STRENGTH, F'M = 1500 psi.
7. LAY UNITS IN RUNNING BOND/CORNERS SHALL HAVE A STANDARD BOND BY OVERLAPPING UNITS.
8. MORTAR: TYPE M.
9. GROUT: (3000) PSI MINIMUM 28 DAY COMPRESSIVE STRENGTH. ROD GROUT IMMEDIATELY AFTER POURING AND AGAIN APPROX. 5 MINUTES LATER.
10. MAXIMUM GROUT LIFT WITHOUT CLEANOUTS SHALL NOT EXCEED 6'-0" IN BLOCK WALLS.
11. TIE VERTICAL REINFORCING AT EACH END AND AT 8'-0" MAXIMUM VERTICAL SPACING USING SINGLE WIRE AND LOOP TYPE TIES AS MANUFACTURED BY A.A. WIRE PRODUCTS COMPANY OR APPROVED EQUAL.
12. IN 8" WALLS PROVIDE VERTICAL REINFORCING IN CENTER OF GROUT, AT CENTER OF WALL, CONTINUOUS FULL HEIGHT OF WALL AS FOLLOWS:
    A. 1 #5 VERTICAL AT CORNERS, INTERSECTIONS, WALL ENDS, JAMBS AND EACH SIDE OF EXPANSION OR CONTROL JOINTS.
    B. 1#5 VERTICAL AT 24" ON-CENTER TYPICAL. (UNLESS NOTED ON PLAN)
    C. 1 #5 VERTICAL IN EACH CORE WITHIN 12 INCHES OF ALL WALL CORNERS.
13. PLACE BOND BEAM REINFORCING CONTINUOUS THROUGH EXPANSION AND CONTROL JOINTS, WRAPPING BARS WITH 1/8" THICK BOND BREAKING TAPE 2'-0" BOTH SIDES OF JOINT. DO NOT SPLICE BOND BEAM REINFORCING WITHIN 6'-0" OF AN EXPANSION OR CONTROL JOINT. PROVIDE CONTINUOUS BOND BEAMS WITH (2) #5 BARS, CONTINUOUS, BENEATH ALL BAR JOIST BEARING ELEVATIONS AND AT TOP OF MSONRY WALL SYSTEMS, BEARING AND NON-BEARING.
14. PROVIDE CONTINUOUS WIRE LATHE GROUT BARRIERS AS REQUIRED UNDER FIRST COURSE OF GROUTED (3000 PSI CONC.) CELLS.
15. PROVIDE LADDER TYPE #9 JOINT REINFORCING AT 16" VERTICAL SPACING IN ALL WALLS.
16. WET MASONRY WALLS THCROUGHLY FOR 3 CONSECUTIVE DAYS IMMEDIATELY AFTER PLACEMENT IF TEMPERATURES ARE/WILL BE ABOVE 80°F DURING THE DAY.
17. NO EXPANSION BOLTS WILL BE ALLOWED IN MASONRY WALLS. (CHEMICAL ANCHORS ONLY)
18. MASONRY LAID IN OUTSIDE AIR TEMPERATURES BELOW 40°F SHALL BE PROTECTED IN ACCORDANCE WITH THE PROVISIONS OF THE "IMIAWC RECOMMENDED PRACTICES AND GUIDE SPECIFICATIONS FOR COLD WEATHER MASONRY".
19. ALL MASONRY BLOCK CORES BELOW FINISH FLOOR SHALL BE FILLED SOLID WITH CONCRETE.

E3 MASONRY NOTES

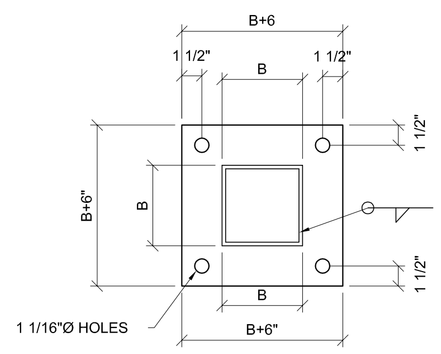

TYPE "1" BASE PLATE

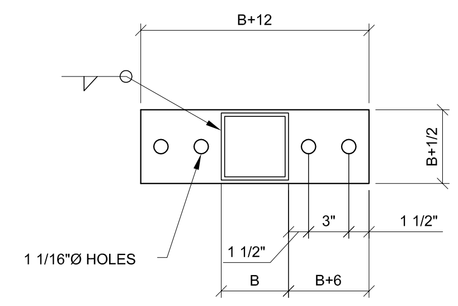

TYPE "2" BASE PLATE

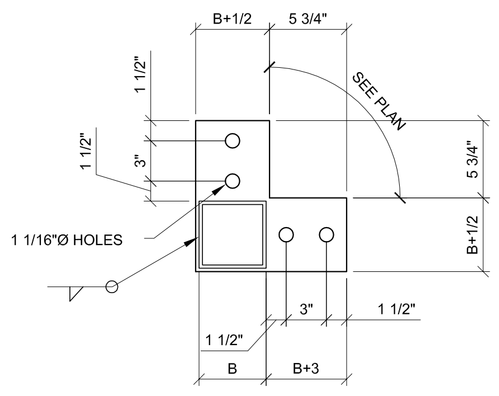

TYPE "3" BASE PLATE

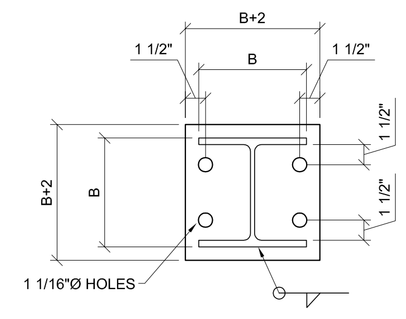

TYPE "4" BASE PLATE

BASE PLATE THICKNESS:

A = 1/2"
B = 5/8"

NOTE:
PROVIDE (4) 3/4"Ø ANCHOR BOLTS W/9" EMBEDMENT AND A 3" LEG. TYP. FOR EACH BASE PLATE (UNO)

PERMIT SET
JUNE 23, 2006

A3 BASE PLATE SCHEDULE

1. ALL WORK SHALL BE DONE IN COMPLIANCE IBC-2003 WITH RHODE ISLAND SUPPLEMENTAL.
2. ALL WORK SHALL BE DONE IN AN ORDERLY AND PROFESSIONAL MANNER. THE GENERAL CONTRACTOR IS RESPONSIBLE FOR COORDINATING ALL WORK TO BE DONE BY SUBCONTRACTORS, LOCAL AUTHORITIES, STATE AGENCIES AND/OR UTILITY COMPANIES WHICH MAY HAVE JURISDICTION OVER THIS PROJECT.
3. THE CONTRACTOR IS RESPONSIBLE FOR COORDINATING, HANDLING, AND STORAGE OF ALL ITEMS/MATERIALS TO REMAIN THE PROPERTY OF THE OWNER WITH THE OWNER'S REPRESENTATIVE.
4. THE CONTRACTOR SHALL BE RESPONSIBLE FOR MEANS AND METHODS AND ALL TEMPORARY SHORING, PRECAUTIONS DURING BUILDING OPERATIONS, PROTECTION OF PUBLIC AND WORKERS, REMOVAL OF WASTE MATERIAL, PROTECTION OF ADJACENT PROPERTY, PROTECTION OF HAZARDOUS OPENINGS, SAFETY PRECAUTIONS, AND SANITARY PROVISIONS OF EMPLOYEES AND SUBCONTRACTORS AS REQUIRED FOR THE DURATION OF THE CONTRACT.
5. STRUCTURAL DRAWINGS SHALL BE USED IN CONJUNCTION WITH THE ARCHITECTURAL, HVAC, PLUMBING, ELECTRICAL, CIVIL SITE DRAWINGS AND MATERIAL SPECIFICATIONS. THESE DRAWINGS SHALL BE REFERRED TO FOR SIZE AND LOCATIONS OF OPENINGS, VENTS, PIPES, INSERTS, HANGERS, ETC…
6. THE CONTRACTOR SHALL SUBMIT SHOP DRAWINGS TO THE STRUCTURAL ENGINEER OF RECORD (SER) AND RECEIVE APPROVAL PRIOR TO FABRICATION AND ERECTION OF MATERIALS. THE DETAILING OF ALL WORK IS PART OF THE CONTRACT AND SHALL BE PERFORMED IN ACCORDANCE WITH THE REQUIREMENTS OF THE CODES SPECIFIED.
7. REPRODUCTION OF STRUCTURAL DRAWINGS FOR SHOP DRAWINGS IS NOT PERMITTED. ELECTRONIC DRAWINGS WILL NOT BE PROVIDED TO THE CONTRACTOR UNLESS THE SER IS COMPENSATED FOR THE FILES.
8. ALL WORK SHALL REQUIRE ADHERANCE TO THE REQUIREMENTS OF ASTM DESIGNATION E-329 ENTITLES "RECOMMENDED PRACTICE FOR INSPECTION AND TESTING AGENCIES FOR CONCRETE AND STEEL USED IN CONSTRUCTION".

F7 GENERAL NOTES

1. REFERENCE DIVISION 3 FOR CONCRETE STRENGTH REQUIREMENTS AT 28 DAYS PER CAST TYPE.
2. ALL INTERIOR 4" SLABS ON GRADE SHALL BE REINFORCED WITH 6 X 6 X W1.4 X W1.4 WELDED WIRE FABRIC OR MESH. ALL 5" SLABS ON GRADE SHALL BE REINFORCED WITH 6X6X W2.9 X W2.9 WWM, UNLESS OTHERWISE NOTED. HAUNCH TO BE INSTALLED BENEATH METAL PRESS SHALL BE 8" IN DEPTH AND SHALL BE REINFORCED WITH #5 REBAR AT 12" O.C SPACING EACH WAY.
3. FOUNDATION WALL CONTROL JOINTS SHALL BE PLACED AT A MAXIMUM SPACING OF 60'-0". ALIGN FOUNDATION CONTROL JOINTS WITH EXTERIOR MASONRY VENEER JOINTS.
4. SLAB ON GRADE AND ELEVATED SLAB CONTROL JOINTS SHALL BE PLACED AS FOLLOWS: AT 4" SLABS SPACE JOINTS 12'-0" (MAX.) ON CENTER EACH WAY; 5" AND 8" SLABS SPACE JOINTS 15'-0" (MAX.) ON CENTER EACH WAY. CONTROL JOINTS SHALL BE FILLED WITH SEALANT AT THE COMPLETION OF THE PROJECT.
5. CONTRACTOR WILL CHECK WITH ALL TRADES TO ASSURE CORRECT LOCATION, SIZE, LINE AND ELEVATION OF ALL SLEEVES, BOND-OUTS, ETC. REQUIRED IN CONCRETE FLOORS AND WALLS.
6. ALL INTERSECTING CONCRETE WALLS SHALL BE TIED WITH #4 L BARS 3'-0" LONG (BENT 18" – 18"), SPACED AT 12" O.C. OUTSIDE FACE ONLY.
7. THE CONTRACTOR SHALL BE RESPONSIBLE FOR FLOOR DRAIN SETTING FOR ELEVATION AND PLUMBNESS TO ASSURE COMPLETE AREA DRAINAGE.
8. ALL FOOTINGS SHALL BEAR ON VIRGIN SOIL OR STRUCTURAL BACKFILL COMPACTED TO A UNIFORM 95% STANDARD DENSITY.
9. ALL MECHANICAL EQUIPMENT RESTING ON THE CONCRETE FLOOR SLAB WILL HAVE A 4" HIGH CONCRETE PAD UNDERNEATH, REINFORCED WITH #3 BARS AT 18" O.C. EACH WAY.
10. ALL STRUCTURAL STEEL BELOW FINISH FLOOR SHALL RECEIVE (2) COATS OF BITUMINOUS MASTIC.
11. ADMIXTURES CONTAINING CALCIUM CHLORIDE SHALL NOT BE USED. CONCRETE SHALL NOT BE IN DIRECT CONTACT WITH ALUMINUM.
12. PROVIDE IN ALL SLABS ON GRADE (2) BARS 4'-0" LONG AT EACH REENTRANT CORNER AND BOTH SIDES OF DOOR OPENING.
13. FOUNDATION WALL REINFORCING WILL BE ADJUSTED AS REQUIRED NOT TO INTERFERE WITH BASE PLATE ANCHOR BOLTS.
14. REFER TO ACI 318 (LATEST EDITION) FOR MINIMUM CONCRETE COVER FOR REINFORCING STEEL.
15. UNLESS OTHERWISE NOTED, REINFORCING LAP SPLICES SHALL BE ACI CLASS B SPLICES USING THE FOLLOWING LAP LENGTHS:

BAR SIZE	3	4	5	6	7	8	9	10	11
LAP in.)	14	19	23	28	38	43	49	62	74

16. COORDINATE SLAB DEPRESSIONS WITH ARCHITECTURAL DRAWINGS.
17. DRILLED-IN ANCHOR BOLTS OR REBAR DOWELS SHALL BE INSTALLED AS FOLLOWS:
    a. LOCATE ANCHOR BOLTS OR DOWELS TO AVOID CUTTING EXISTING REBAR.
    b. DEPTH IS BASED ON A CLEAN HOLE WITH ROUGH SIDES. ROTARY PERCUSSION EQUIPMENT AND COURSE ROCK CUTTING CHISELS ARE RECOMMENDED. DIAMOND CORE BITS SHOULD BE AVOIDED AS EMBEDMENT LENGTHS MAY NEED TO BE INCREASED. HOLE SIZE TO BE PER MANUFACTURER'S RECOMMENDATIONS.
    c. CLEAN HOLES WITH COMPRESSED AIR OR VACUUM, REMOVE ANY FREE-STANDING WATER AND ALLOW HOLE TO DRY.
    d. GROUT ANCHOR BOLTS OR DOWELS WITH HILTI HIT HY-150 ADHESIVE IN ACCORDANCE WITH MANUFACTURER'S RECOMMENDATIONS. (HILTI HEA ADHESIVE CAPSULE MAY BE SUBSTITUTED FOR THE HILTI HIT HY-150 ADHESIVE.)

D7 FOUNDATION NOTES

EXCAVATION AND GRADING - INCLUDES THE REMOVAL OF BELOW-GRADE BORROW AND MISCELLANEOUS MATERIALS FOR THE INSTALLATION OF PIPING AND OTHER SUBSURFACE STORMWATER FACILITIES INDICATED ON THE DRAWING.

1. CONTRACTOR TO PROTECT ALL FEATURES INDICATED NOT TO BE DISTURBED DURING CONSTRUCTION.
2. CONTRACTOR SHALL PROTECT EXISTING STRUCTURES INCLUDING, BUT NOT LIMITED TO, BUILDINGS, FOUNDATIONS, FOOTINGS, FENCES, ROADS, PAVING, ETC. CONTRACTOR SHALL REPLACE/REPAIR DAMAGES TO THE OWNER'S SATISFACTION AT NO ADDITIONAL COST TO THE OWNER.
3. CONTRACTOR SHALL PROVIDE BRACING OF SOILS SUPPORTING EXISTING STRUCTURES TO PREVENT AGAINST LOSS OF SUPPORT.
4. CONTRACTOR TO IDENTIFY AND PROTECT ABOVE AND BELOW-GROUND UTILITIES WHICH ARE NOT TO BE DISTURBED.
5. CONTRACTOR SHALL PROTECT BENCH MARKS, SURVEY REFERENCE MARKS, AND PROPERTY CORNERS.
6. CONTRACTOR SHALL COMPLY WITH ALL CITY, STATE AND FEDERAL REGULATIONS FOR THE DISPOSAL OF EXCAVATED MATERIALS.
7. NOTIFY OWNER IMMEDIATELY IF ROCK IS ENCOUNTERED. DO NOT PROCEED WITH ROCK EXCAVATION UNTIL AUTHORIZED BY THE OWNER.

BACKFILLING AND COMPACTION - INCLUDES THE INSTALLATION OF SUBGRADE AND FINISH GRADE MATERIAL, FILL AND THE COMPACTION THEREOF.

1. ORDINARY FILL: NATIVE OR IMPORTED MATERIAL, WELL-GRADED, FREE OF ORGANIC MATERIAL AND FOREIGN MATTER HAVING A DRY DENSITY NOT LESS THAN 115 POUNDS PER CUBIC FOOT. ON-SITE EXCAVATION MATERIAL MEETING THE ABOVE MAY BE USED.
2. DRAINAGE FILL: WASHED, EVENLY-GRADED MIXTURE OF CRUSHED STONE, OR CRUSHED/UNCRUSHED GRAVEL, WITH 100 PERCENT PASSING A 1-1/2 INCH SIEVE AND NOT MORE THAN 5 PERCENT PASSING A No. 4 SIEVE.
3. PROOF COMPACT THE BOTTOM OF THE EXCAVATION BY MAKING (2) PASSES WITH A VIBRATORY PLATE COMPACTOR PRIOR TO THE INSTALLATION OF DRAINAGE PIPING.
4. COMPACT EITHER ORDINARY OR DRAINAGE FILL IN CONTINUOUS LAYERS NOT EXCEEDING EIGHT (8) INCH LIFTS. CONTRACTOR TO MAINTAIN OPTIMUM MOISTURE CONDITIONS TO ENSURE COMPACTION TO 95 PERCENT MAXIMUM DRY DENSITY. (REFER TO ASTM D698 FOR COMPACTION PROCEDURES)
5. FILTER FABRIC: USE MIRAFI 140 NS NON-ORGANIC FILTER FABRIC. INSTALL CONTINUOUSLY ALONG LENGTH OF DRAINAGE PIPING INSTALLATIONS. LAP MATERIAL A MINIMUM OF 12 INCHES AT ALL SPLICES AND JOINTS.

DRAINAGE PIPING - INCLUDES THE INSTALLATION OF PERFORATED AND NON-PERFORATED PVC DRAINAGE PIPE FOR SUBSURFACE STORMWATER TRANSPORT. REFER TO OWNER PROVIDED GEOTECHNICAL REPORT FOR SUBSURFACE DRAINAGE REQUIREMENTS.

1. PIPING TO BE ADS BRAND N-12 OR ENGINEER-APPROVED EQUAL, RIGID PVC PIPE OR POLYETHYLENE PIPE.
2. CONTRACTOR TO PROVIDE ALL FITTINGS, COUPLINGS, ETC. FOR A COMPLETE INSTALLATION.

SUPPLEMENTAL NOTES

1. THE EXCAVATION AND EARTHWORK SHALL ONLY EXPOSE THE MINIMUM AMOUNT OF SOIL NEEDED TO PROMOTE THE EFFICIENT AND PROGRESSIVE SITE CONSTRUCTION.
2. THE CONTRACTOR IS RESPONSIBLE FOR THE INSTALLATION OF HAY BALES AND SILT FENCE BARRIERS AS REQUIRED TO PROTECT WATER COURSES AND DOWNSLOPE AREAS. THE SILT FENCE AND HAY BALE BARRIERS SHALL BE LOCATED ON THE DOWN GRADIENT OF THE EARTHWORK OPERATION AS INDICATED ON THE DRAWINGS OR AS REQUIRED BY STATE REGULATIONS.
3. ON-SITE TOPSOIL REMOVED DURING CONSTRUCTION AND STOCKPILED FOR LATER USE SHALL BE SEEDED, MULCHED, SECURED AND PROTECTED BY SILT FENCE BARRIERS.
4. THE CONTRACTOR SHALL VERIFY ALL DIMENSIONS AND CONDITIONS PRIOR TO STARTING WORK AND SHALL NOTIFY THE ENGINEER IN WRITING OF ANY DISCREPANCIES DUE TO SITE CONDITIONS.
5. THE CONTRACTOR SHALL COMPLY WITH MAINE DIG SAFE REQUIREMENTS.

A7 SITE NOTES

160 Veranda Street
Portland, Maine 04103
T: 207.221.2260
F: 207.221.2266
Web: www.allied-eng.com

Allied Engineering
Structural Mechanical Electrical Commissioning

STATE OF MAINE WILLIAM P FAUCHER #7133 REGISTERED PROFESSIONAL ENGINEER

REVISIONS

NUMBER	DATE	BY	DESCRIPTION

Date: __/__/__
Drawn By: PED
Checked By: WFF
Project Mgr: WFF
Project No: 06029
Cad File: 0602950.dwg
Graphic Scale: 0 1"

NOTES, SCHEDULES AND BRACE SCHEMATICS

DELTA ROOFING

PORTLAND, MAINE

© COPYRIGHT 2006 ALLIED ENGINEERING, INC.

S-000

N:\Projects\2006\06029 ~ Delta Roofing Warehouse_Office Bldg\00 Drawing Files ~current CAD files\0602950.dwg Jun 23, 2006 ~ 12:48pm