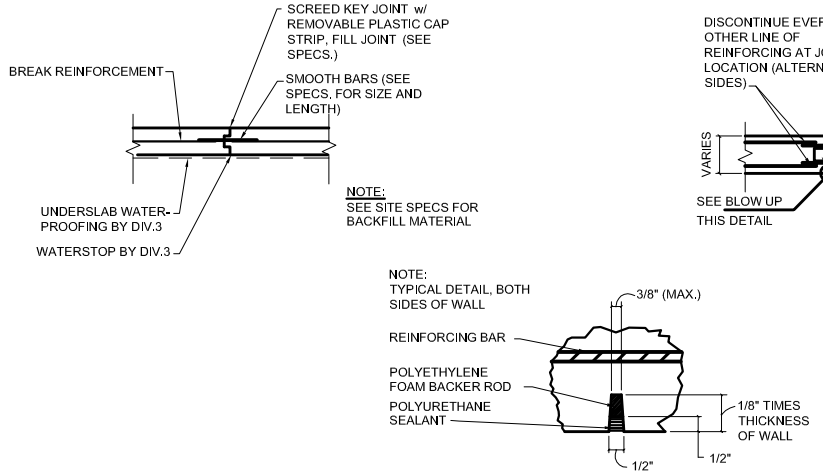

F1 WALL AND SLAB CONSTRUCTION JOINT DETAIL

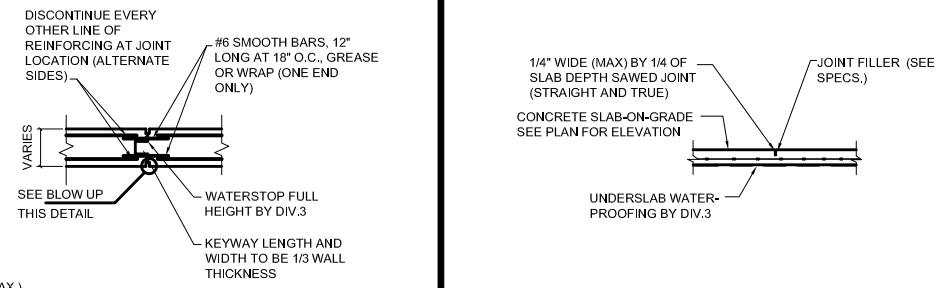

F5 TYPICAL SLAB CONTROL JOINT DETAIL

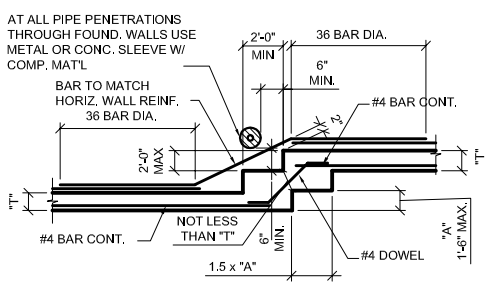

D1 TYPICAL STEPPED FOOTING DETAIL

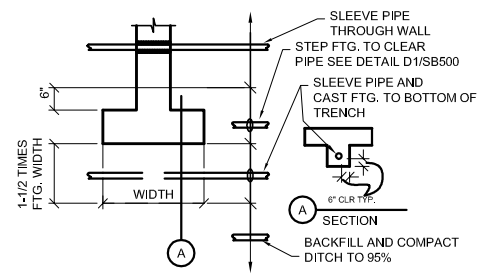

D3 TYPICAL PIPE AT FOOTING DETAIL

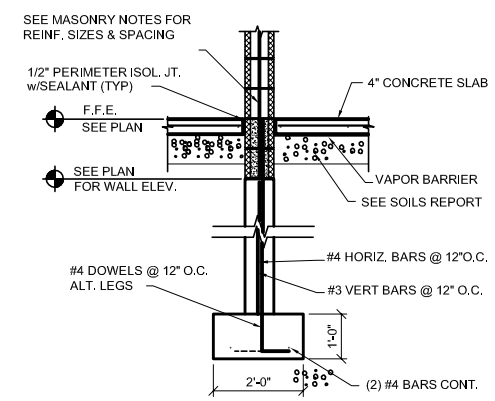

D5 INTERIOR WAL/FOOTING DETAIL AT CMU

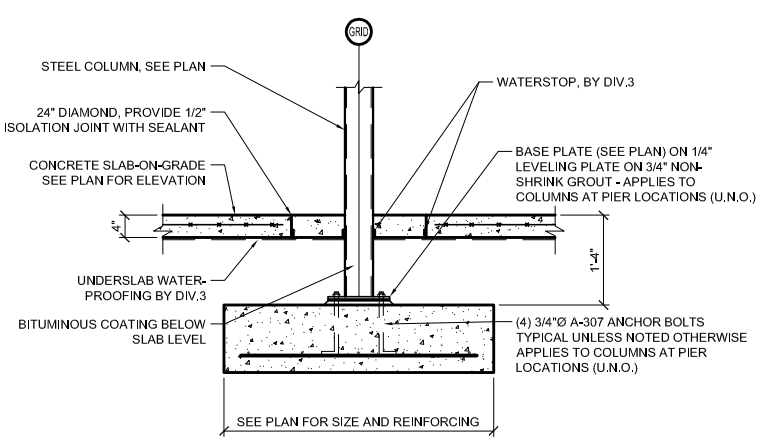

B1 TYPICAL INTERIORSPREAD FOOTING DETAIL

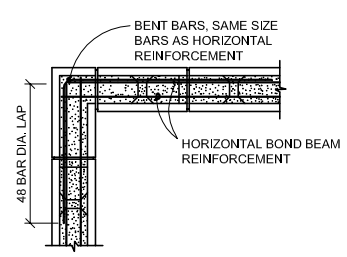

B4 TYPICAL BOND BEAM @ CORNER

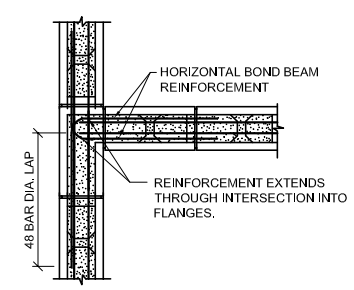

B5 TYPICAL BOND BEAM @ WALL INT.

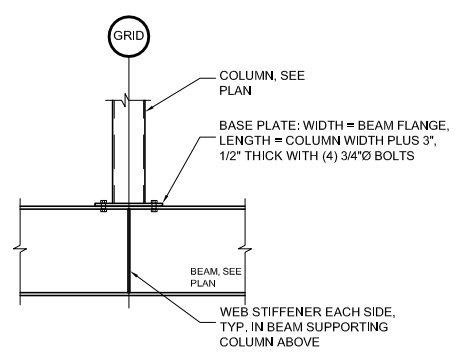

A4 TYPICAL COLUMN ABOVE DETAIL

PERMIT SET

JUNE 23, 2006

1. PORTIONS OF STEEL FRAMING TO RECEIVE FIREPROOFING SHALL BE SHIPPED UNPRIMED & UNPAINTED. REFER TO ARCHITECTURAL PLANS FOR LOCATIONS.
2. MINIMUM LOADING REQUIREMENTS:
   A. ROOF LOADS: (EXCEPT AT DRIFTING SNOW LOCATIONS AND TOSL LISTED BELOW):
      LIVE (SNOW) LOAD: 60.0 P.S.F. (IMPORTANCE FACTOR = 1.0, EXPOSURE FACTOR = 1.0)
      DEAD LOAD: 25.0 P.S.F.
      PONDING DESIGN DEPTH: 8" MAX.
   B. DRIFTING SNOW, MECHANICAL UNITS, AND SPECIAL CONDITIONS:
      SEE STRUCTURAL DRAWING SF-103 FOR DRIFTING SNOW LOAD DISTRIBUTION DIAGRAMS, WEIGHT AND LOCATION OF ROOF-TOP HVAC UNITS, AND SPECIAL CONDITIONS INFLUENCING THE DESIGN REQUIREMENTS OF THE STRUCTURAL SYSTEMS.
   C. FLOOR LOADS:

CORRIDORS ABOVE 1ST FLOOR:	LIVE 80 PSF	DEAD 57 PSF
OFFICE/CONFERENCE:	LIVE 50 PSF	DEAD 57 PSF
STORAGE AREAS:	LIVE 125 PSF	DEAD 57 PSF
ADDITIONAL LIVE LOAD FOR OFFICE PARTITIONS:	LIVE 20 PSF	

WIND LOADS:
   A. FACTORS:
      BASIC WIND SPEED: 90 MPH; EXPOSURE CATEGORY: "B"
      IMPORTANCE FACTOR: 1.0 AVERAGE BUILDING HEIGHT: 25' +/-
   B. MINIMUM ROOF UPLIFT DESIGN LOADS:
      a. FIELD: 13 PSF
      b. PERIMETER (7' WIDE): 16 PSF
      c. CORNERS (7' x 7'): 22 PSF
   C. SEISMIC COEFFICIENTS:
      a. RESPONSE SPECTRAL ACC. (0.2 sec.): S_s = 0.370g
      b. RESPONSE SPECTRAL ACC. (1.0 sec.): S_1 = 0.016g
      c. SITE COEFFICIENTS: F_a = 1.505 F_v = 2.40
      d. MAX. CONSIDERED EARTHQUAKE ACC @ 5% DAMPED DESIGN: S_{DS} = 0.370; S_{D1} = 0.167
      e. BUILDING CATEGORY: II
      f. SEISMIC USE GROUP: I
      g. SEISMIC DESIGN CATEGORY FOR 0.1 AND 1.0 SECONDS: C

STRUCTURAL/SEISMIC RESISTING SYSTEM:
1. TYPICAL –
   BUILDING FRAME SYSTEM
   A. ORDINARY STEEL MOMENT FRAMES:
      a. RESPONSE MODIFICATION FACTOR (R) = 3 ½
      b. DEFLECTION AMPLIFICATION FACTOR (Cd) = 3
   B. ORDINARY REINFORCED MASONRY SHEAR WALLS:
      a. RESPONSE MODIFICATION FACTOR (R) = 3
      b. DEFLECTION AMPLIFICATION FACTOR (Cd) = 2 ½
   BEARING WALL SYSTEM
   C. ORDINARY STEEL MOMENT FRAMES:
      c. RESPONSE MODIFICATION FACTOR (R) = 3 ½
      d. DEFLECTION AMPLIFICATION FACTOR (Cd) = 3

2. ALL STRUCTURAL STEEL BEAMS, COLUMNS SHALL CONFORM TO ASTM A992, Fy=50ksi ALL STEEL TUBE COLUMNS SHALL CONFORM TO ASTM A500 GRADE "B", Fy=46ksi ALL MISCELLANEOUS PLATES, SHAPES ANGLES ETC. SHALL CONFORM TO ASTM A36 Fy36ksi.
4. ALL STRUCTURAL WOOD TO CONFORM TO THE LATEST NDS STANDARDS.
5. ALL PLYWOOD TO CONFORM TO THE LATEST PDS STANDARDS.
6. SEE ARCHITECTURAL WALL SECTIONS AND DETAILS FOR MISCELLANEOUS STEEL.
7. ALL STEEL BEAMS RESTING ON MASONRY WALLS SHALL HAVE BEARING PLATES AND (3) COURSES OF FILLED BLOCK UNDERNEATH.
8. PROVIDE AND INSTALL DOUBLE 2X8 HEADER AND RAIL FRAMING AROUND ALL ROOF PENETRATIONS. SEE MECHANICAL PLANS AND DETAILS AND ROOF PLANS AND DETAILS.
9. STEEL ROOF DECK AND FASTENING REQUIREMENTS SHALL BE AS SPECIFIED IN DIVISION 5 OF THE SPECIFICATIONS.
10. ALL BASE PLATE ANCHOR BOLTS IN NEW CONSTRUCTION WILL BE 3/4" Ø A 307 WITH A MINIMUM OF 12" EMBEDMENT AND A STANDARD 3" HOOK.
11. ALL SILL PLATES SHALL BE FASTENED TO FOUNDATION WITH 1/2" Ø ANCHOR BOLTS AT 4'-0" O.C. UNLESS OTHERWISE NOTED.
12. AT LOCATIONS BETWEEN SUPPORTS, PROVIDE 3/8" WEB STIFFENERS (UNLESS OTHERWISE NOTED) ON BOTH SIDES OF STEEL BEAMS AT ALL LOCATIONS WHERE STEEL BEAMS SUPPORT COLUMNS ABOVE.
13. ALL STEEL TUBE, PIPE, OR STRUCTURAL STEEL COLUMNS SUPPORTED BY A STEEL BEAM SHALL HAVE BASEPLATES WELDED TO THE BEAM ON ALL SIDES.
14. SPECIAL INSPECTIONS: AN INDEPENDENT INSPECTION'S PROGRAM AND SCHEDULE SHALL BE ARRANGED BY THE BUILDING OWNER AND THE STRUCTURAL ENGINEER OF RECORD.
15. A QUALIFIED PERSON APPROVED BY THE BUILDING OFFICIALS SHALL MAKE SPECIAL INSPECTIONS IN ACCORDANCE WITH CHAPTER 17 OF THE IBC2003 AND AS DEFINED SPECIAL INSPECTOR SHALL OBSERVE WORK FOR CONFORMANCE WITH THE APPROVED DRAWINGS AND SPECIFICATIONS.
16. INSPECTION REPORTS SHALL BE FURNISHED TO THE OWNER, BUILDING OFFICIAL, ARCHITECT AND SER. DISCREPENCIES SHALL BE BROUGHT TO THE ATTENTION OF THE CONTRACTOR AND IF NOT CORRECTED, SHALL BE RECRTED TO THE OWNER, BUILDING OFFICIAL, ARCHITECT AND SER.
17. THE FOLLOWING TYPES OF WORK SHALL RECEIVE SPECIAL INSPECTION OVERSITE: INSTALLAT ON OF HIGH STRENGTH BOLTS, WELDING, STRUCTURAL FRAME AND DETAILS INSTALLATION OF REINFORCING STEEL, CONCRETE PLACEMENT, STRUCTURAL FILL PLACEMENT, AND FABRICATION PROCESSES OF COLD METAL FRAMING ELEMENTS AND ASSEMBLIES.
18. SITE PREPARATION FOR THE FOUNDATION SHALL BE IN ACCORDANCE WITH THE OWNER SUPPLIED GEOTECHNICAL REPORT AND RECOMMENDATIONS. REFERENCE SAME REPORT FOR ALL UNDERSLAB AND PERIMETER DRAINAGE PIPING REQUIREMENTS.

C7 STRUCTURAL NOTES

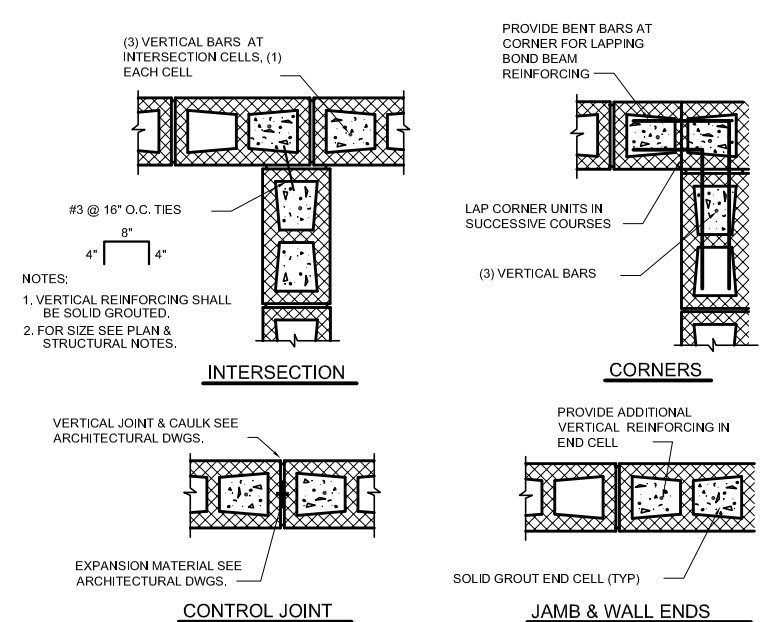

A1 -

A7 TYPICAL CMU REINFORCING DETAIL

160 Veranda Street
Portland, Maine 04103
T: 207.221.2260
F: 207.221.2266
Web: www.allied-eng.com

Allied Engineering
Structural Mechanical Electrical Commissioning

STATE OF MAINE WILLIAM P. FAUCHER 6133 REGISTERED PROFESSIONAL ENGINEER

REVISIONS

NUMBER	DATE	BY	DESCRIPTION

Date: __/__/__
Drawn By: PED
Checked By: WPF
Project Mgr: WPF
Project No: 06029
Cad File: 06029S.dwg
Graphic Scale: 0 1"

NOTES AND MISC. DETAILS

DELTA ROOFING

PORTLAND, MAINE

© COPYRIGHT 2006 ALLIED ENGINEERING, INC.

S-001

N:\Projects\2006\06029 - Delta Roofing Warehouse_Office Bldg\00 Drawing Files --current CAD files\06029S0.dwg Jun 23, 2006 - 1:00pm