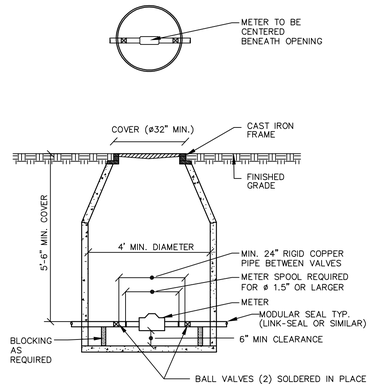

METER PIT AND COVER NOTES:

1. THE METER PIT SHALL BE SUPPLIED AND INSTALLED BY THE CUSTOMER AND SHALL BE LOCATED ON PRIVATE PROPERTY BETWEEN 10'-0" AND 20'-0" FROM THE PROPERTY LINE.
2. THE METER PIT SHALL BE MADE OF PRECAST CONCRETE OF SUFFICIENT SIZE TO PROVIDE 5'-" MINIMUM GROUND COVER FROM FINISHED GRADE TO THE TOP OF THE SERVICE PIPE. ANY SEAMS BETWEEN CONCRETE SECTIONS SHALL BE SEALED WITH MASTIC JOINT. ALL OPENINGS IN THE CONCRETE FOR SERVICE PIPING SHALL BE SEALED WITH A MODULAR SEAL. (LINK-SEAL OF SIMILAR)
3. THE INTERIOR OF THE METER PIT SHALL BE A MINIMUM OF 4'-0" IN DIAMETER. AND THE METER PIT OPENING SHALL BE A MINIMUM OF 30" IN DIAMETER WITH A CAST IRON FRAME. THE METER PIT COVER SHALL BE CAST IRON 32" MINIMUM IN DIAMETER, AND BE WITHER PERMANENTLY LABELED "WATER" OR HAVE NO LABEL ANY STEEL PLATE MATERIAL SHALL BE COATED WITH A RUST INHIBITOR PAINT.
4. WALL-MOUNTED LADDER RUNGS SHOULD NOT BE INSTALLED WITHIN METER PIT.
5. ALL PIPING INSIDE AND EXTENDING THROUGH THE METER PIT SHALL BE MADE OF COPPER, WITH A MINIMUM OF 6" CLEARANCE FROM THE METER PIT FLOOR. BLOCKING SHALL BE INSTALLED AS REQUIRED TO SUPPORT THE PIPE.
6. CUSTOMER SHALL ENSURE THE METER PIT AND COVER ARE PROPERTY RATED FOR TRAFFIC FLOW IF APPLICABLE.
7. ONLY PORTLAND WATER DISTRICT PERSONNEL ARE AUTHORIZED TO INSTALL WATER METERS. PORTLAND WATER DISTRICT PERSONNEL WILL BE ADDITIONALLY AUTHORIZED TO OPERATE METER VALVES AS NEEDED FOR INSTALLATION AND MAINTENANCE.
8. PORTLAND WATER DISTRICT WILL SUPPLY THE WATER METER AND NECESSARY FITTINGS FOR INSTALLATION. IF REQUIRED, A FLANGED METER SPOOL WILL BE AVAILABLE FOR CUSTOMER PICKUP AT DOUGLASS STREET CUSTOMER SERVICE AND MUST BE INSTALLED BY CUSTOMER PRIOR TO METER SET. ALL OTHER MATERIALS INCLUDING VALVES, SHALL BE SUPPLIED AND INSTALLED BY THE CUSTOMER.
9. CUSTOMER WILL INSTALL TWO (2) BALL VALVES 24" APART FOR METER INSTALLATION ALLOWING FOR THE WATER METER TO BE CENTERED UNDER THE METER PIT OPENING, BALL VALVES SHALL BE SOLDERED IN PLACE.
10. FOR A SERVICE PIPE WITH A DIAMETER OF 1" OR LESS, CUSTOMER WILL INSTALL RIGID COPPER PIPE (24" MINIMUM) BETWEEN THE BALL VALVES.
11. FOR PIPING WITH A DIAMETER OF 1-1/2" OR LARGER, THE CUSTOMER WILL OBTAIN A FLANGED METER SPOOL PIECE FROM THE PORTLAND WATER DISTRICT. THE CUSTOMER IS RESPONSIBLE FOR ENSURING THAT THE SPOOL PIECE IS INSTALLED PRIOR TO METER INSTALLATION.
12. THE METER PIT MAY HOUSE UP TO TWO 5/8", 3/4" OR 1" METERS. INSTALLATION OF MULTIPLE METERS IN A METER PUT MUST RECEIVE PRIOR APPROVAL FROM THE PORTLAND WATER DISTRICT.

TYPICAL METER PIT (2" METERS)

NOT TO SCALE

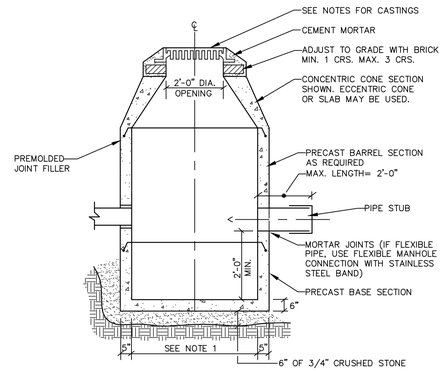

NOTES:

1. 4'-0" I.D. TYPICAL. SOME STRUCTURES MAY REQUIRE LARGER I.D. PROVIDE SHOP DRAWINGS.
2. DRAINAGE STRUCTURES TO BE DESIGNED FOR H-20 LOADING.
3. PIPE SIZES AND INVERTS AS NOTED ON PLANS.
4. CATCH BASIN FRAME AND GRATE TO BE NEENAH FOUNDRY R-2554, OR APPROVED EQUAL.

TYPICAL CATCH BASIN

NOT TO SCALE

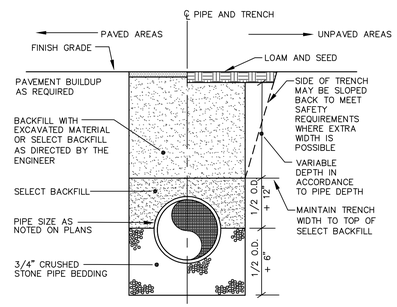

TYPICAL TRENCH SECTION

NOT TO SCALE

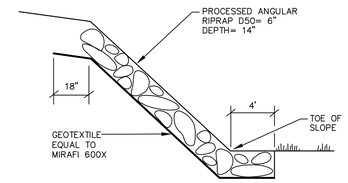

SIDE SLOPE RIPRAP

NOT TO SCALE

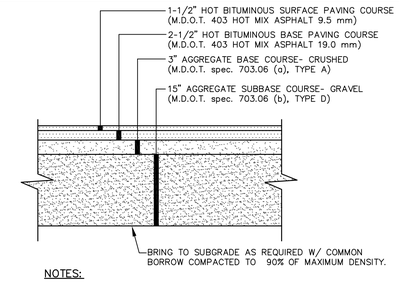

NOTES:

1. COMPACT GRAVEL SUBBASE, BASE COURSE TO 92% OF MAXIMUM DENSITY USING HEAVY ROLLER COMPACTION.
2. CONTRACTOR SHALL SET GRADE STAKES MARKING SUBBASE AND FINISH GRADE ELEVATIONS FOR CONSTRUCTION REFERENCE.
3. CONTRACTOR MAY REPLACE BITUMINOUS PAVING SECTION WITH TWO (2) 1-1/2" LIFTS OF 12.5mm SUPERPAVE MIX. SUBMIT PAVEMENT MIX DESIGN PRIOR TO CONSTRUCTION.

TYP. PAVED PARKING LOT SECTION

NOT TO SCALE

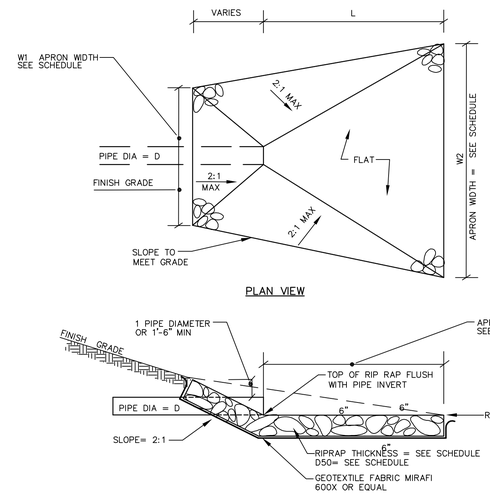

NOTES

1. RIPRAP TO BE PROCESSED ANGULAR ROCK
2. RIPRAP GRADIATION SHALL BE A WELL GRADED MIX FROM ABOUT 1.5 TIMES D SIZE TO 25 PERCENT OF THE D SIZE
3. THE RIPRAP STONES SHALL BE CAREFULLY PLACED FROM THE TOE OF THE SLOPE UPWARD
4. STONES SHALL BE LOWERED TO THE SLOPE AND NOT BE ALLOWED TO DROP MORE THAN 12" ONTO THE GEOTEXTILE
5. THE FINISHED SURFACE SHALL BE A RELATIVELY SMOOTH, UNIFORMLY SLOPED SURFACE

TYPICAL RIPRAP APRON SCHEDULE

CULVERT DIAMETER - D (IN.)	APRON LENGTH - L (FT.)	WIDTH -W1 (FT)	WIDTH -W2 (FT)	RIPRAP D50 (IN.)	RIPRAP THICKNESS (IN.)
12	8	3	9	6	14
15	10	4	12	6	14
18	13	5	15	7	16
24	18	6	20	8	18
36	29	9	32	11	25
42	33	11	37	12	27
48	39	12	43	16	36

RIPRAP APRON

NOT TO SCALE

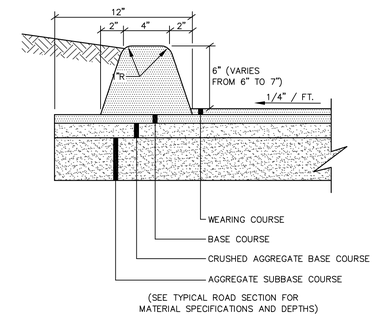

BITUMINOUS CURB SECTION

NOT TO SCALE

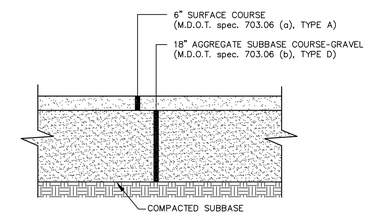

TYP. GRAVEL PARKING AREA

NOT TO SCALE

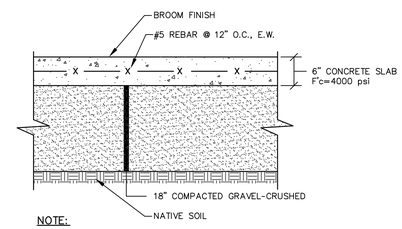

NOTE:

1. PROVIDE CONTRACTION CONTROL JOINTS EVERY 6' IN EACH DIRECTION

TYPICAL CONCRETE SLAB

NOT TO SCALE

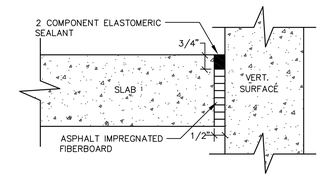

ISOLATION JOINT

NOT TO SCALE

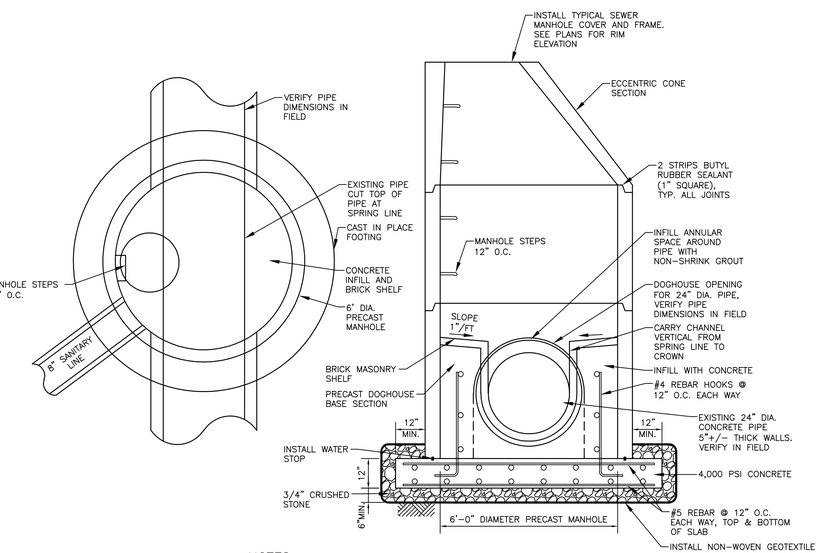

NOTES:

1. CUT EXISTING PIPE AND REMOVE TOP HALF OF PIPE PRIOR TO CONSTRUCTING BRICK SHELF.
2. ALL BACKFILL WITHIN 3' OF STRUCTURE SHALL BE GRANULAR BORROW PLACED IN 8" LIFTS COMPACTED TO 95% OPTIMUM DENSITY.
3. VERIFY PIPE DIMENSIONS IN FIELD AND SUBMIT SHOP DRAWINGS FOR ENGINEERS APPROVAL.

DOGHOUSE MANHOLE

NOT TO SCALE

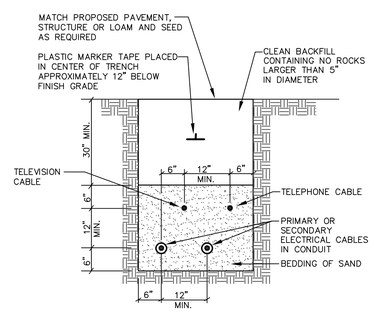

CABLES TO BE ENCASED IN SCHEDULE 40 PVC CONDUIT WHEN RUN BENEATH PAVED AREAS.

TYPICAL UNDERGROUND CABLE INSTALLATION

NOT TO SCALE

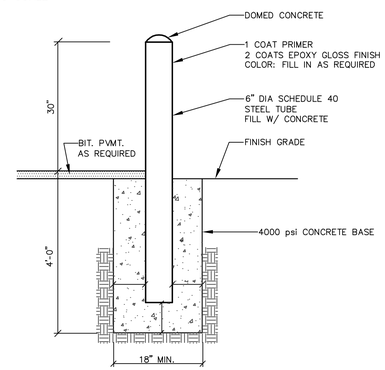

METAL BOLLARD

NOT TO SCALE

PROGRESS PRINT

STATE OF MAINE SHAWN M. FRANK No. 6396 PROFESSIONAL ENGINEER 07/13/18

SHAWN M. FRANK, PE 6396

DESIGNED	CHECKED
SAH	SMF

REV.	BY:	DATE:	STATUS:
A	SMF	7-13-18	ISSUED TO CITY

THIS PLAN SHALL NOT BE MODIFIED WITHOUT WRITTEN PERMISSION FROM SEBAGO TECHNICS, INC. ANY ALTERATIONS, AUTHORIZED OR OTHERWISE, SHALL BE AT THE USER'S SOLE RISK AND WITHOUT LIABILITY TO SEBAGO TECHNICS, INC.

SEBAGO TECHNICS
WWW.SEBAGOTECHNICS.COM
75 John Roberts Rd.
Suite 4A
South Portland, ME 04106
Tel. 207-200-2100

DETAILS
OF:
250 RIVERSIDE INDUSTRIAL PARKWAY
RIVERSIDE INDUSTRIAL PARKWAY
PORTLAND, MAINE
FOR:
TWO EISENHOWER DRIVE, LLC
P.O. BOX 1120
PORTLAND, MAINE 04104

PROJECT NO.	SCALE
16360	N.T.S.

16360 D.dwg, TAB:D2