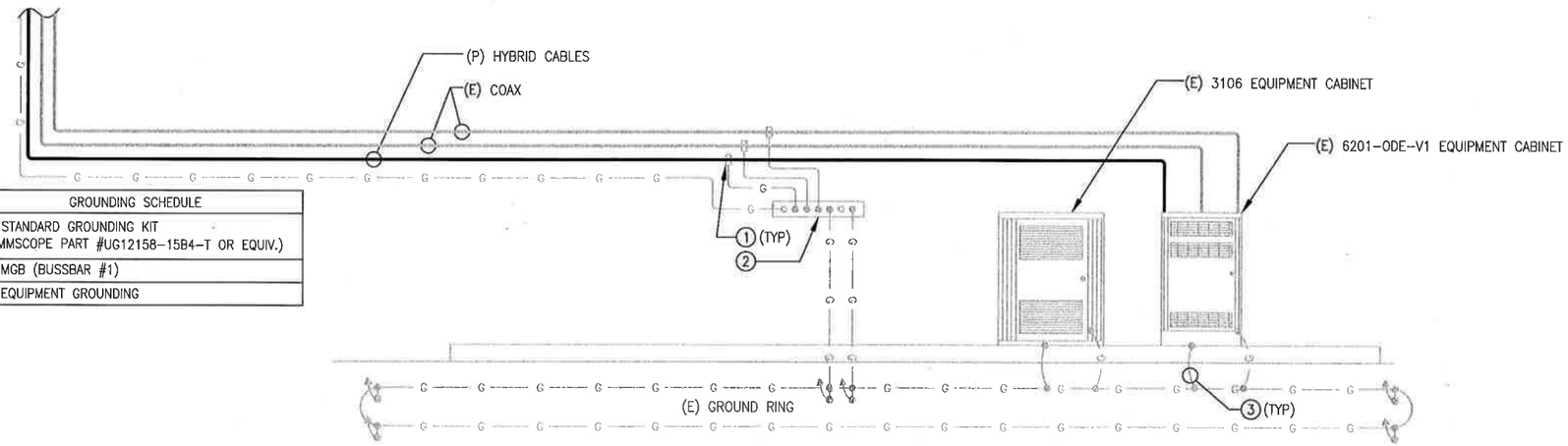

GROUNDING SCHEDULE	
①	(P) STANDARD GROUNDING KIT (COMMSCOPE PART #UG12158-15B4-T OR EQUIV.)
②	(E) MGB (BUSSBAR #1)
③	(E) EQUIPMENT GROUNDING

1 GROUNDING DIAGRAM
SCALE: NOT TO SCALE

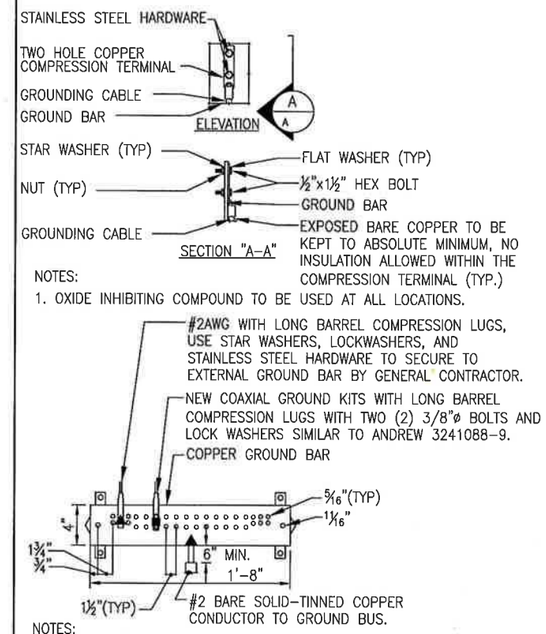

NOTES:
1. OXIDE INHIBITING COMPOUND TO BE USED AT ALL LOCATIONS.

NOTES:
1. ALL HARDWARE STAINLESS STEEL COAT ALL SURFACES WITH KOPR-SHIELD BEFORE MATING.
2. FOR GROUND BOND TO STEEL ONLY: INSERT A TOOTH WASHER BETWEEN LUG AND STEEL, COAT ALL SURFACES WITH KOPR-SHIELD.
3. ALL HOLES ARE COUNTERSUNK 1/16".

2 GROUND BAR CONNECTION DETAILS
SCALE: NOT TO SCALE

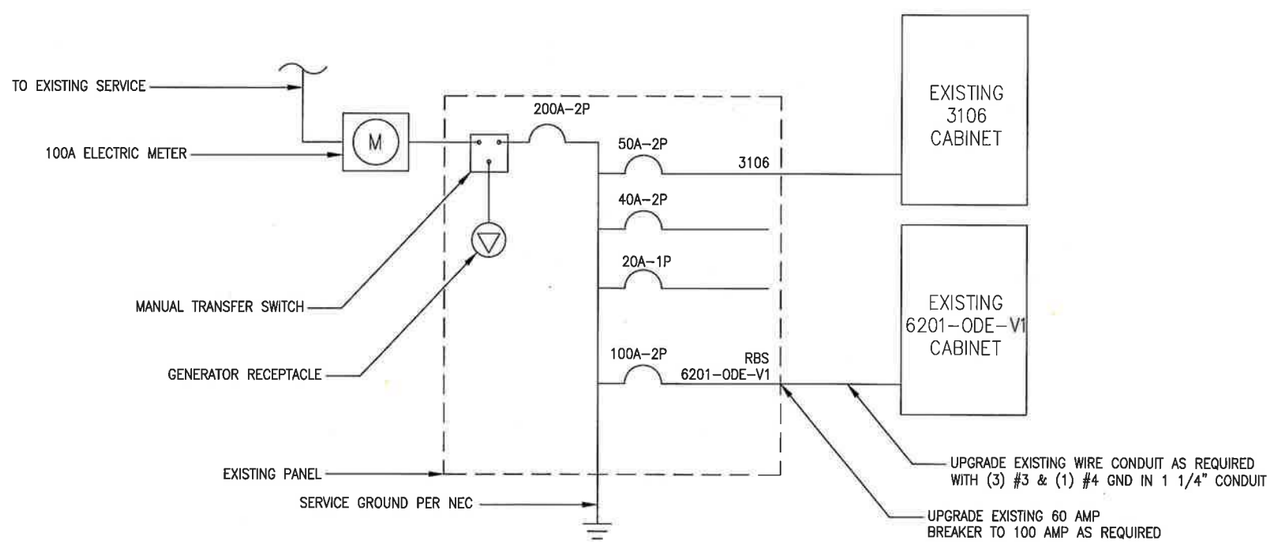

3 POWER DIAGRAM
SCALE: NOT TO SCALE

CONTRACTOR NOTE:
CONTRACTOR TO VERIFY THAT THE EXISTING CONDUITS AND WIRE SIZES ARE ADEQUATE FOR THE PROPOSED LOADING IN ACCORDANCE WITH NEC AND INCLUDE ELECTRICAL UPGRADES IN THE SCOPE OF WORK AS REQUIRED.

NOTE:
INFINIGY HAS NOT CONDUCTED AN ELECTRICAL LOAD STUDY FOR THIS SITE. CONTRACTOR IS TO VERIFY EXISTING ELECTRICAL LOADING PRIOR TO CONSTRUCTION TO ENSURE EXISTING INCOMING SERVICE CAPACITY. ALL ELECTRICAL INSTALLATION IS TO COMPLY WITH NEC, ADOPTED VERSION.

T-MOBILE

Reviewed for Code Compliance
Inspections Division
Approved with Conditions
Date: 11/27/17

INFINIGY
1033 Watervliet Shaker Rd
Albany, NY 12205
Office # (518) 690-0790
Fax # (518) 690-0793

SUBMITTALS		
DATE	DESCRIPTION	REVISION
09/13/17	ISSUED FOR PERMIT	0

DEPT.	DATE	APP'D	REVISIONS
RFE.			
RF MAN.			
ZONING			
OPS.			
CONSTR.			
SITE AC.			

PROJECT NO:	317-501
DRAWN BY:	MPS
CHECKED BY:	ASW

STATE OF MAINE
JOHN S. STEVENS
No. 12817
LICENSED
PROFESSIONAL ENGINEER
SEP 13 2018
PROFESSIONAL SEAL

THIS DOCUMENT IS THE CREATION, DESIGN, PROPERTY AND COPYRIGHTED WORK OF T-MOBILE. ANY DUPLICATION OR USE WITHOUT EXPRESS WRITTEN CONSENT IS STRICTLY PROHIBITED.

NOTE: IF DRAWINGS ARE 22"x34", USE GRAPHICAL SCALE AND/OR 1/2 TIMES OF THE NOTED SCALE.

SITE NUMBER:
4DN2267B

SITE NAME:
ME267 / DORLER TOWER (ATS)

220 RIVERSIDE INDUSTRIAL PARKWAY
PORTLAND, ME 04103

SHEET TITLE
GROUNDING & POWER DIAGRAMS

SHEET NUMBER
E-1

SHEET 6 OF 8 SHEETS