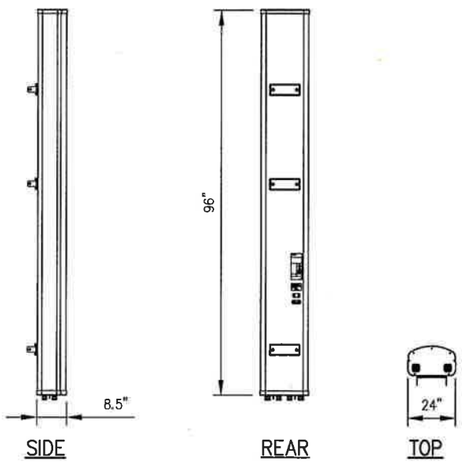

RFS MODEL NO.:	APXVAA24_43-U-A20
RADOME MATERIAL:	FIBERGLASS, UV RESISTANT
RADOME COLOR:	LIGHT GRAY
DIMENSIONS, HxWxD:	96"x24"x8.5"
WEIGHT, W/ PRE-MOUNTED BRACKETS:	46.0 LBS
CONNECTOR:	7-16 DIN FEMALE

1 ANTENNA DETAIL
NOT TO SCALE

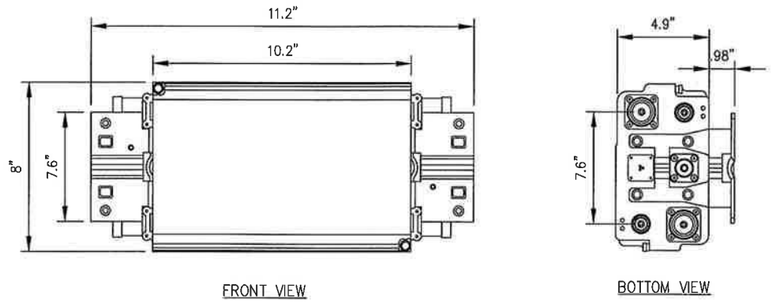

RFS MODEL NO.:	ATMS4P4DBP-1A20
COLOR:	GRAY
DIMENSIONS, HxWxD:	11.2"x8"x4.9"
WEIGHT:	15.85 LBS

2 TMA DETAIL
NOT TO SCALE

STRUCTURAL NOTES:

1. SPECIFICATIONS / CODES:
   - CONCRETE WORK SHALL BE PERFORMED IN ACCORDANCE WITH LATEST EDITION OF THE ACI CODE.
   - STEEL WORK SHALL BE PERFORMED IN ACCORDANCE WITH AISC STEEL CONSTRUCTION MANUAL, 9TH EDITION.
   - WELDING SHALL BE PERFORMED IN ACCORDANCE WITH AMERICAN WELDING SOCIETY (AWS) D1.1-92 "STRUCTURAL WELDING" CODE-STEEL.
   - REINFORCING STEEL SHALL BE PLACED IN ACCORDANCE WITH THE CONCRETE REINFORCING STEEL INSTITUTE (CRSI), "MANUAL OF STANDARD PRACTICE."
2. MATERIALS:
   - CONCRETE: fc' - 3000psi. (MIN. U.N.O.)
   - REINFORCING STEEL: ASTM A615, GRADE 60.
   - WIRE MESH: ASTM A185.
   - STRUCTURAL STEEL: ASTM A36.
   - ELECTRODES FOR WELDING: E 70xx.
   - GALVANIZING: ASTM A153 (BOLTS) OR ASTM A123 (SHAPES, PLATES).
   - EXPANSION BOLTS: HILTI KWIK BOLT II, STAINLESS STEEL, 3/4"øx43/4" EMBEDMENT OR AN APPROVED EQUAL.

3 NOTES
NOT TO SCALE

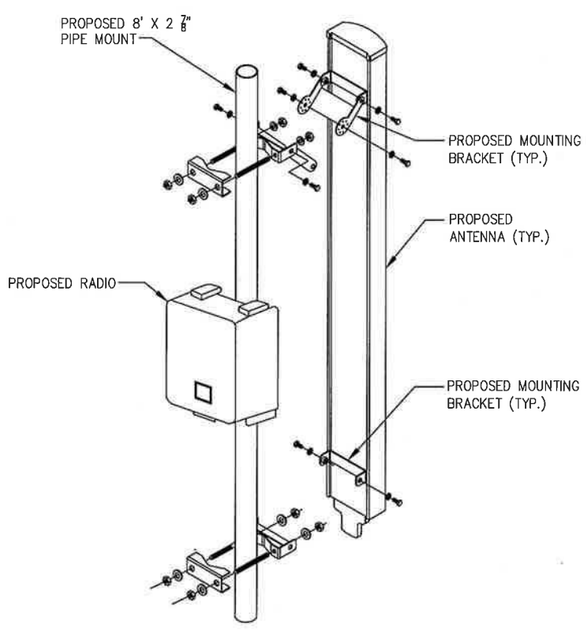

4 ANTENNA MOUNTING DETAIL
NOT TO SCALE

ERICSSON RADIO
P/N: RADIO 4478 B71
DIMENSIONS: 15"X13.2"X7.4"(HXWXD)
WEIGHT: 60.0 LBS

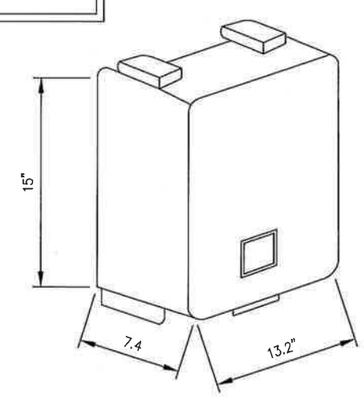

5 RADIO DETAIL
NOT TO SCALE

METALLIC TAG NOTES:

1. TWO METALLIC TAGS SHALL BE ATTACHED AT EACH END OF EVERY CABLE LONGER THAN (3) THREE FEET.
2. CABLES LESS THAN (3) THREE FEET WILL HAVE TWO METALLIC TAGS ATTACHED AT THE CENTER OF THE CABLE.
3. TAGS WILL BE FASTENED WITH STAINLESS STEEL ZIP TIES APPROPRIATE FOR CABLE DIAMETER.
4. STANDARDIZED METALLIC TAG KITS WILL BE ASSEMBLED WITH TAGS ALREADY ENGRAVED TO ACCOMODATE ALL CONFIGURATIONS.

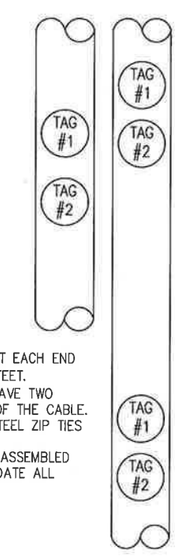

5 METALLIC TAG DETAIL
NOT TO SCALE

T-MOBILE

Reviewed for Code Compliance
Inspections Division
Approved with Conditions
Date: 11/27/17

INFINIGY
1033 Watervliet Shaker Rd
Albany, NY 12205
Office # (518) 690-0790
Fax # (518) 690-0793

SUBMITTALS		
DATE	DESCRIPTION	REVISION
09/13/17	ISSUED FOR PERMIT	0

DEPT.	DATE	APP'D	REVISIONS
RFE			
RF MAN.			
ZONING			
OPS			
CONSTR.			
SITE AC.			

PROJECT NO:	317-501
DRAWN BY:	MPS
CHECKED BY:	ASW

STATE OF MAINE
JOHN S. STEVENS
No. 12818
LICENSED
PROFESSIONAL ENGINEER
SEP 1 2017
PROFESSIONAL SEAL

THIS DOCUMENT IS THE CREATION, DESIGN, PROPERTY AND COPYRIGHTED WORK OF T-MOBILE. ANY DUPLICATION OR USE WITHOUT EXPRESS WRITTEN CONSENT IS STRICTLY PROHIBITED.

NOTE: IF DRAWINGS ARE 22"x34", USE GRAPHICAL SCALE AND/OR 1/2 TIMES OF THE NOTED SCALE.

SITE NUMBER:
4DN2267B

SITE NAME:
ME267 / DORLER TOWER (ATS)

220 RIVERSIDE INDUSTRIAL PARKWAY
PORTLAND, ME 04103

SHEET TITLE

EQUIPMENT SPECIFICATIONS

SHEET NUMBER

C-4

SHEET 5 OF 8 SHEETS