Site Name:	**Portland ME, ME**	*Program Last Updated:*	*5/13/*
Site Number:	**10047**	*American Tower Corporation*	
Engineering Number:	**OAA702064_C3_07**		
Engineer:	**Brendan M Smith**		
Date:	**06/21/17**		

Reviewed for Code Compliance
Inspections Division
Approved with Conditions
Date: 11/27/17

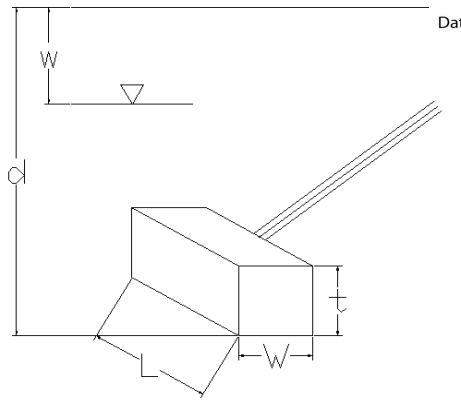

Design Standard per TIA-222-G

Anchor Radius:	115.0	ft
Uplift (Factored - P_u):	100.3	k
Shear (Factored - V_u):	65.8	k
Berm Present:	N	
Design Anchor Rod:	N	
Mapped Foundation:	N	
Anchor Base Depth (d):	12.5	ft
Width of Anchor (W):	12.0	ft
Length of Anchor (L):	12.0	ft
Thickness of Anchor (t):	3.0	ft
Depth Below Ground Surface to Water Table (w):	99.0	ft
Soil Uplift at Base / Top of Anchor (B/T):	T	
Unit Weight of Concrete:	150.0	pcf
Unit Weight of Soil Above Water Table:	110.0	pcf
Unit Weight of Water:	62.4	pcf
Submerged Soil Unit Weight:	55.0	pcf
Internal Angle of Friction:	10	Degrees
Cohesion:	0	psf
Ultimate Skin Friction of Pad Sides to Soil:	220	psf
Ultimate Coefficient of Shear Friction:	0.30	
Maximum Top Conical Failure Angle:	20	Degrees
Maximum Base Conical Failure Angle:	20	Degrees
Allowable Capacity Increase:	1.00	(Due to Transient Loads)
Uplift Strength Reduction Factor (ϕ_u):	0.75	
Shear Strength Reduction Factor (ϕ_v):	0.75	
Concrete Uplift Strength Reduction Factor (ϕ_u):	0.90	

Uplift

Weight of Concrete (Buoyancy Effect Considered):	64.8	k
Weight of Soil (Buoyancy Effect Considered):	250.3	k
Ultimate Uplift Resistance from Skin Friction:	23.8	k
Nominal Factored Uplift Resistance ($\phi_u P_n$):	246.0	k
P_u / $\phi_u P_n$:	0.40	Result: OK

Shear

Ultimate Shear Friction Resistance Due to Normal Force - Uplift:	42.7	k
Passive Pressure:	1719	psf
Ultimate Passure Pressure Resistance:	61.9	k
Nominal Shear Resistance ($\phi_v V_n$):	78.4	k
V_u / $\phi_v V_n$:	0.82	Result: OK