Reviewed for Code Compliance
Inspections Division
Approved with Conditions
Date: 11/27/17

09/27/17

To Whom It May Concern:

My name is Adam Wolfrey and recently T-Mobile hired my company to upgrade their equipment at the cell site located at 220 Riverside Industrial Parkway. The total cost of construction is $15,000. Can you please email me what the permit fee is? My email address is awolfrey@clinellc.com.

Thanks,

Adam

Portland, Maine | Yes. Life's good here.

Permitting and Inspections Department
Michael A. Russell, MS, Director

Reviewed for Code Compliance
Inspections Division
Approved with Conditions
Date: 11/27/17

General Building Permit Application

Project Address: 220 Riverside Industrial Parkway

Tax Assessor's CBL: _____ _____ _____ (Chart # / Block # / Lot #) **Cost of Work:** $ 15000

Proposed use (e.g., single-family, retail, restaurant, etc.): _____

Current use: Existing Cell Tower(T-Mobile) **Past use, if currently vacant:** _____

(●) **Commercial** ( ) **Multi-Family Residential** ( ) **One/Two Family Residential**

Type of work (check all that apply):

☐ New Structure	☐ Fence	☐ Change of Ownership - Condo Conversion
☐ Addition	☐ Pool - Above Ground	☐ Change of Use
☐ Alteration	☐ Pool - In Ground	☐ Change of Use - Home Occupation
☐ Amendment	☐ Retaining Wall	☐ Radio/Telecommunications Equipment
☐ Shed	☐ Replacement Windows	☑ Radio/Telecommunications Tower
☐ Demolition - Structure	☐ Commercial Hood System	☐ Tent/Stage
☐ Demolition - Interior	☐ Tank Installation/	☐ Wind Tower
☐ Garage - Attached	☐ Replacement Tank Removal	☐ Solar Energy Installation
☐ Garage - Detatched		☐ Site Alteration

Project description/scope of work (attach additional pages if needed):

On behalf of T-Mobile the proposed work involves modifying the antenna equipment.

Applicant Name: Adam Wolfrey - Agent **Phone:** (508) 667 - 3100

Address: 95 Ryan Drive, Suite 1, Raynham MA 02767 **Email:** awolfrey@clinellc.com

Lessee/Owner Name (if different): T-Mobile LLC **Phone:** (____) _____ - _____

Address: 95 Ryan Drive Suite 1, Raynham MA **Email:** _____

Contractor Name (if different): Ericsson Inc **Phone:** (443) 570 - 0010

Address: 389 Congress Street Portland Maine **Email:** _____

I hereby certify that I am the owner of record of the named property, or that the owner of record authorizes the proposed work and that I have been authorized by the owner to make this application as his/her authorized agent. I agree to conform to all applicable laws of this jurisdiction. In addition, if a permit for work described in this application is issued, I certify that the Code Official's authorized representative shall have the authority to enter all areas covered by this permit at any reasonable hour to enforce the provisions of the codes applicable to this permit.

Signature: (Agent) Date: 9/27/17

This is a legal document and your electronic signature is considered a legal signature per Maine state law.

Review of this application will not begin until the permit payment is received. This is not a permit. Work may not commence until the permit is issued.

389 Congress Street/Portland, Maine 04101/ http://portlandmaine.gov /tel: (207) 874-8703/fax: (207) 874-8716

Permitting and Inspections Department
Michael A. Russell, MS, Director

Reviewed for Code Compliance
Inspections Division
Approved with Conditions
Date: 11/27/17

Requirements for Electronic Submissions

In order to ensure the most expedient review of your application, please meet the requirements below for all submissions:

- **All applications must be submitted electronically via e-mail to permitting@portlandmaine.gov.** Paper applications will not be accepted.
- **Drawings sheets shall be submitted individually-- each PDF file shall contain no more than one drawing sheet.** Only PDF files are acceptable for plan review, and each file shall not exceed 5MB in size.*
- **Drawing files shall be named based on the drawing sheet number and name.** It is recommended to include a Category/Discipline letter (such as A for Architectural), a sheet number and a descriptive title (e.g., A1 Existing Exterior Elevation).
- **Revised file submissions must use the exact same file name as originally submitted.** The Electronic Plan Review software will recognize this submission as Version 2.
- **Supporting documents shall be submitted as an individual PDF file for each document (these documents may be multi-page PDF files) and named based on the document type** (e.g., "Deed", "Stormwater Report", "Permit Application", etc.). Searchable PDF files are requested for calculations, reports and other supporting documents.
- **A graphic scale or a scale to reference shall be included on each drawing sheet.**
- **Plans prepared by a design professional shall include a Code Analysis sheet**, referencing the Maine Uniform Building and Energy Code and Portland City Code, Chapter 10 – Fire Prevention and Protection, which includes National Fire Protection Association (NFPA) 1, Fire Code and NFPA 101, Life Safety Code. Chapter 10 of the City Code can be viewed at: http://www.portlandmaine.gov/citycode/chapter010.pdf.
- **Files shall be submitted via email to permitting@portlandmaine.gov. The email subject line shall include the project address and type of permit.** Multiple emails may be sent for one project if the files exceed the maximum file size.
- **Submissions should include all required documents and drawings as listed on the appropriate Submission Checklist sheet specific to the type of work being performed.**

For further information and to access PDF versions of this and other forms, visit the Permitting and Inspections Department online at **http://portlandmaine.gov/1728/Permitting-Inspections.**

*To download a free version of Adobe Acrobat Reader, please visit: https://get.adobe.com/reader/

Portland, Maine | Yes. Life's good here.

Permitting and Inspections Department
Michael A. Russell, MS, Director

Reviewed for Code Compliance
Inspections Division
Approved with Conditions
Date: 11/27/17

Electronic Signature and Fee Payment Confirmation

This is a legal document and your electronic signature is considered a legal signature per Maine state law. You will receive an e-mailed invoice from our office which signifies that your electronic permit application has been received and is ready for payment. Please pay by one of the following:

- Electronic check or credit card: portlandmaine.gov/payyourpermit
- Over the phone at (207) 874-8703
- Drop off to Room 315, City Hall
- Mail to:

City of Portland
Permitting and Inspections Department
389 Congress Street, Room 315
Portland, Maine 04101

By signing below, I understand the review process starts once my payment has been received. After all approvals have been completed, my permit will be issued via e-mail. Work may not commence until permit is issued.

Applicant Signature: _____ Date: 9/27/17

I have provided electronic copies and sent them on: Date: 9/27/17

NOTE: All electronic paperwork must be delivered to permitting@portlandmaine.gov or with a thumb drive to the office.

If you or the property owner owes taxes or user charges on property within the City, payment arrangements must be made before a permit application is accepted.

ACORD®

CERTIFICATE OF LIABILITY INSURANCE

DATE
09/2

Reviewed for Code Compliance
Inspections Division
Approved with Conditions
Date: 11/27/17

THIS CERTIFICATE IS ISSUED AS A MATTER OF INFORMATION ONLY AND CONFERS NO RIGHTS UPON THE CERTIFICATE HO
CERTIFICATE DOES NOT AFFIRMATIVELY OR NEGATIVELY AMEND, EXTEND OR ALTER THE COVERAGE AFFORDED BY THE
BELOW. THIS CERTIFICATE OF INSURANCE DOES NOT CONSTITUTE A CONTRACT BETWEEN THE ISSUING INSURER(S), AU
REPRESENTATIVE OR PRODUCER, AND THE CERTIFICATE HOLDER.

IMPORTANT: If the certificate holder is an ADDITIONAL INSURED, the policy(ies) must have ADDITIONAL INSURED provisions or be endorsed. If SUBROGATION IS WAIVED, subject to the terms and conditions of the policy, certain policies may require an endorsement. A statement on this certificate does not confer rights to the certificate holder in lieu of such endorsement(s).

PRODUCER
Marsh USA, Inc.
4400 Comerica Bank Tower
1717 Main Street
Dallas, TX 75201-7357
Attn. dallas.certs@marsh.com 212-948-0519/866-966-4664
06925 -NET-GAXSW-17-18 ORG

CONTACT NAME:
PHONE (A/C, No, Ext): **FAX (A/C, No):**
E-MAIL ADDRESS:

INSURER(S) AFFORDING COVERAGE	NAIC #
INSURER A : ACE American Insurance Company	22667
INSURER B : ACE Property & Casualty Insurance Company	20699
INSURER C : Agri General Insurance Company	42757
INSURER D : ACE Fire Underwriters Company	20702
INSURER E :	
INSURER F :	

INSURED
Ericsson Inc. et al.
Attn: Jackqueline Madrid
6300 Legacy Drive
Plano, TX 75024

COVERAGES **CERTIFICATE NUMBER:** HOU-003351907-01 **REVISION NUMBER:** 3

THIS IS TO CERTIFY THAT THE POLICIES OF INSURANCE LISTED BELOW HAVE BEEN ISSUED TO THE INSURED NAMED ABOVE FOR THE POLICY PERIOD INDICATED. NOTWITHSTANDING ANY REQUIREMENT, TERM OR CONDITION OF ANY CONTRACT OR OTHER DOCUMENT WITH RESPECT TO WHICH THIS CERTIFICATE MAY BE ISSUED OR MAY PERTAIN, THE INSURANCE AFFORDED BY THE POLICIES DESCRIBED HEREIN IS SUBJECT TO ALL THE TERMS, EXCLUSIONS AND CONDITIONS OF SUCH POLICIES. LIMITS SHOWN MAY HAVE BEEN REDUCED BY PAID CLAIMS.

INSR LTR	TYPE OF INSURANCE	ADDL INSD	SUBR WVD	POLICY NUMBER	POLICY EFF (MM/DD/YYYY)	POLICY EXP (MM/DD/YYYY)	LIMITS	
A	X COMMERCIAL GENERAL LIABILITY			HDO G27865252	05/01/2017	05/01/2018	EACH OCCURRENCE	$ 2,000,000
	CLAIMS-MADE X OCCUR						DAMAGE TO RENTED PREMISES (Ea occurrence)	$ 1,000,000
							MED EXP (Any one person)	$ 5,000
							PERSONAL & ADV INJURY	$ 2,000,000
	GEN'L AGGREGATE LIMIT APPLIES PER						GENERAL AGGREGATE	$ 4,000,000
	X POLICY PRO-JECT LOC						PRODUCTS - COMP/OP AGG	$ 2,000,000
	OTHER:							$
A	AUTOMOBILE LIABILITY			ISA H09055691	05/01/2017	05/01/2018	COMBINED SINGLE LIMIT (Ea accident)	$ 1,000,000
	X ANY AUTO						BODILY INJURY (Per person)	$
	OWNED AUTOS ONLY / SCHEDULED AUTOS						BODILY INJURY (Per accident)	$
	HIRED AUTOS ONLY / NON-OWNED AUTOS ONLY						PROPERTY DAMAGE (Per accident)	$
								$
B	X UMBRELLA LIAB X OCCUR			G27975422 002	05/01/2017	05/01/2018	EACH OCCURRENCE	$ 5,000,000
	EXCESS LIAB CLAIMS-MADE						AGGREGATE	$ 5,000,000
	DED RETENTION $							$
A	WORKERS COMPENSATION AND EMPLOYERS' LIABILITY			WLR C49114977 (AOS)	05/01/2017	05/01/2018	X PER STATUTE OTH-ER	
C	ANYPROPRIETOR/PARTNER/EXECUTIVE OFFICER/MEMBER EXCLUDED? Y / N N	N / A		WLR C49114989 (TN)	05/01/2017	05/01/2018	E.L. EACH ACCIDENT	$ 1,000,000
D	(Mandatory in NH) If yes, describe under DESCRIPTION OF OPERATIONS below			SCF C49114990 (WI)	05/01/2017	05/01/2018	E.L. DISEASE - EA EMPLOYEE	$ 1,000,000
							E.L. DISEASE - POLICY LIMIT	$ 1,000,000

DESCRIPTION OF OPERATIONS / LOCATIONS / VEHICLES (ACORD 101, Additional Remarks Schedule, may be attached if more space is required)
Re: Project Name/Contract Number: TMO L600

CERTIFICATE HOLDER

City of Portland ME
389 Congress Street
Portland, ME 04101

CANCELLATION

SHOULD ANY OF THE ABOVE DESCRIBED POLICIES BE CANCELLED BEFORE THE EXPIRATION DATE THEREOF, NOTICE WILL BE DELIVERED IN ACCORDANCE WITH THE POLICY PROVISIONS.

AUTHORIZED REPRESENTATIVE
of Marsh USA Inc.
Manashi Mukherjee Manashi Mukherjee

© 1988-2016 ACORD CORPORATION. All rights reserved.

The ACORD name and logo are registered marks of ACORD

Reviewed for Code Compliance
Inspections Division
Approved with Conditions
Date: 11/27/17

Interactive Corporate Services

MAINE

Department of the Secretary of State

Bureau of Corporations, Elections and Commissions

Corporate Name Search

Information Summary

Subscriber activity report

This record contains information from the CEC database and is accurate as of: Fri Sep 22 2017 13:06:38. Please print or save for your records.

Legal Name	Charter Number	Filing Type	Status
ERICSSON INC.	20010950 F	BUSINESS CORPORATION (FOREIGN)	GOOD STANDING

Filing Date	Expiration Date	Jurisdiction
04/02/2001	N/A	DELAWARE

Other Names **(A=Assumed ; F=Former)**

NONE

Clerk/Registered Agent

CAPITOL CORPORATE SERVICES, INC.
128 STATE ST 3RD FL
AUGUSTA, ME 04330

Back to previous screen | New Search

Click on a link to obtain additional information.

List of Filings	View list of filings
Obtain additional information:	
Certificate of Existence (more info)	Short Form without amendments ($30.00)

You will need Adobe Acrobat version 3.0 or higher in order to view PDF files.
If you encounter problems, visit the troubleshooting page.

Get Acrobat Reader

If you encounter technical difficulties while using these services, please contact the Webmaster. If you are unable to find the information you need through the resources provided on this web site, please contact the Bureau's Reporting and Information Section at 207-624-7752 or e-mail or visit our Feedback page.

© Department of the Secretary of State

Reviewed for Code Compliance
Inspections Division
Approved with Conditions
Date: 11/27/17

Reviewed for Code Compliance
Inspections Division
Approved with Conditions
Date: 11/27/17

AMERICAN TOWER®
CORPORATION

Structural Analysis Report

Structure	:	**275 ft Guyed Tower**
ATC Site Name	:	**PORTLAND ME, ME**
ATC Site Number	:	**10047**
Engineering Number	:	**OAA706994_C3_01**
Proposed Carrier	:	**T-Mobile**
Carrier Site Name	:	**ME267/Dorler Tower (ATS)**
Carrier Site Number	:	**4DN2267B**
Site Location	:	**225 Riverside Industrial Parkway** **Portland, ME 04103-1438** **43.706000,-70.310700**
County	:	**CUMBERLAND**
Date	:	**July 26, 2017**
Max Usage	:	**111%**
Result	:	**Fail**

Prepared By:
Brendan M. Smith, E.I.
Structural Engineer II

Reviewed By:

STATE OF MAINE
JOSHUA WALTON
No. 13932
LICENSED
PROFESSIONAL ENGINEER

Jul 27 2017 5:58 PM cosign

Reviewed for Code Compliance
Inspections Division
Approved with Conditions
Date: 11/27/17

Table of Contents

Introduction 1

Supporting Documents 1

Analysis 1

Conclusion 1

Existing and Reserved Equipment 2

Equipment to be Removed 3

Proposed Equipment 3

Structure Usages 4

Foundations 4

Deflection, Twist, and Sway 4

Standard Conditions 5

Calculations ..... Attached

Reviewed for Code Compliance
Inspections Division
Approved with Conditions
Date: 11/27/17

Introduction

The purpose of this report is to summarize results of a structural analysis performed on the 275 ft guyed tower to reflect the change in loading by T-Mobile.

Supporting Documents

Tower Drawings	PiRod Drawing # 110412-B dated September 29, 1987
Foundation Drawing	PiRod Drawing # 110412-B dated September 29, 1987
Geotechnical Report	GEOServices, LLC Project # 21-07254 dated April 27, 2008

Analysis

The tower was analyzed using American Tower Corporation's tower analysis software. This program considers an elastic three-dimensional model and second-order effects per ANSI/TIA-222.

Basic Wind Speed:	98 mph (3-Second Gust)
Basic Wind Speed w/ Ice:	40 mph (3-Second Gust) w/ 1" radial ice concurrent
Code:	ANSI/TIA-222-G / 2009 IBC / Maine Model Building Code
Structure Class:	II
Exposure Category:	B
Topographic Category:	1
Spectral Response:	Ss = 0.25, S_1 = 0.08
Site Class:	D - Stiff Soil

Conclusion

Based on the analysis results, the structure does not meet the requirements per the applicable codes listed above. The tower and foundation can support the equipment as described in this report after the modifications listed below are completed:

- Reinforce base foundation.

If you have any questions or require additional information, please contact American Tower via email at Engineering@americantower.com. Please include the American Tower site name, site number, and engineering number in the subject line for any questions.

CITY OF PORTLAND, MAINE · RESURGAM
Reviewed for Code Compliance
Inspections Division
Approved with Conditions
Date: 11/27/17

Existing and Reserved Equipment

Elevation[1] (ft)		Qty	Antenna	Mount Type	Lines	Carrier
Mount	RAD					
272.0	272.0	12	Commscope SBNHH-1D65C (96.6")	Sector Frames	(17) 1 5/8" Coax (2) 1 5/8" Hybriflex	Verizon
		3	Alcatel-Lucent B66a RRH4x45 (AWS-3)			
		3	Alcatel-Lucent B25 RRH4x30-4R			
		3	Alcatel-Lucent B13 RRH4x30-4R			
		2	Raycap RxxDC-3315-PF-48			
260.0	260.0	3	RFS APX16DWV-16DWV-S-E-ACU	Sector Frames	(12) 1 5/8" Coax (1) 1/2" Coax	T-Mobile
		1	Radio Waves G3-2.4			
239.0	239.0	1	RAC 8' Ice Shield	Leg	-	US Dept. Of Homeland Security
230.0	230.0	1	Radio Waves HPD6-4.7NS	Leg	(1) 1/2" Coax (1) 1 5/8" Coax	
		1	Motorola PTP 45600			
206.0	206.0	3	KMW HB-X-WM-17-65-00T	Stand-Offs	(6) 1 5/8" Coax	Clearwire
		3	KMW HB-X-WM-17-65-00T-TTLNA (w/BKT)			
190.0	195.0	1	10' Omni	Stand-Off	(1) 1 1/4" Coax	City Of Portland
188.0	188.0	3	Ericsson RRUS-11 (50 lbs.)	Sector Frames	(6) 1 5/8" Coax (1) 1 1/4" Fiber	US Cellular
		6	KMW AM-X-CD-17-65-00T-RET			
		1	Raycap RUSDC-6267-PF-48			
170.0	175.0	1	10' Omni	Stand-Off	(1) 7/8" Coax	City Of Portland
168.0	171.0	1	TX RX Systems 421-83A-01261	Stand-Off	(1) 1/2" Coax (1) 7/8" Coax	
	174.0	1	Bird BA40-41-DIN			US Dept. Of Homeland Security
153.0	153.0	1	6' Ice Shield	Leg	-	
142.0	142.0	1	Radio Waves HPD4-4.7	Leg	(2) 1/4" Coax (1) 1 5/8" Coax	
		1	Motorola PTP 45600			
125.0	131.0	1	Bird BA40-41-DIN	Stand-Off	(1) 7/8" Coax	
124.0	125.0	2	2' Omni	Stand-Off	(1) 1/2" Coax (1) 7/8" Coax	City Of Portland
99.0	100.0	1	2' Omni	Stand-Off	(1) 1/2" Coax	
38.0	38.0	1	2" X 8" GPS	Stand-Off	(1) 1/4" Coax	

CITY OF PORTLAND, MAINE · RESURGAM
Reviewed for Code Compliance
Inspections Division
Approved with Conditions
Date: 11/27/17

Equipment to be Removed

Elevation[1] (ft)		Qty	Antenna	Mount Type	Lines	Carrier
Mount	RAD					
260.0	260.0	3	RFS APX16DWV-16DWV-S-E-ACU	-	-	T-Mobile
		3	Ericsson KRY 112 144/1			
		3	RFS ATMAA1412D-1A20			

Proposed Equipment

Elevation[1] (ft)		Qty	Antenna	Mount Type	Lines	Carrier
Mount	RAD					
260.0	260.0	3	RFS APXVAA24_43-U-A20	Sector Frames	(1) 1 1/4" Fiber	T-Mobile
		3	Ericsson Radio 4478 B71			
		3	RFS ATMA4P4DBP-1A20			
		3	Andrew ETW200VS12UB			

[1]Mount elevation is defined as height above bottom of steel structure to the bottom of mount, RAD elevation is defined as center of antenna above ground level (AGL).

Install proposed coax alongside existing T-Mobile coax.

CITY OF PORTLAND, MAINE · RESURGAM
Reviewed for Code Compliance
Inspections Division
Approved with Conditions
Date: 11/27/17

Structure Usages

Structural Component	Controlling Usage	Pass/Fail
Legs	81%	Pass
Diagonals	101%	Pass
Horizontals	87%	Pass
Guys	62%	Pass
Leg Bolts	66%	Pass

Foundations

Reaction Component	Analysis Reactions	% of Usage
Base Axial (kips)	355.8	111%
Anchor 1 Uplift (kips)	100.3	40%
Anchor 1 Shear (kips)	65.8	82%

The structure foundation was found to be inadequate through analysis based on geotechnical and foundation information. Modification or reinforcement of the foundation will be required.

Deflection, Twist and Sway*

Antenna Elevation (ft)	Antenna	Carrier	Deflection (ft)	Twist (°)	Sway (Rotation) (°)
260.0	Andrew ETW200VS12UB	T-Mobile	0.180	0.029	0.021
	RFS ATMA4P4DBP-VA20				
	Ericsson Radio 4478 B71				
	Radio Waves G3-2.4				
	RFS APXVAA24_43-U-A20				
230.0	Radio Waves HPD6-4.7NS	US Dept. of Homeland	0.163		0.050
142.0	Radio Waves HPD4-4.7		0.111		0.044

***Deflection, Twist and Sway was evaluated considering a design wind speed of 60 mph (3-Second Gust) per ANSI/TIA-222-G**

AMERICAN TOWER®
CORPORATION

Reviewed for Code Compliance
Inspections Division
Approved with Conditions
Date: 11/27/17

Standard Conditions

All engineering services are performed on the basis that the information used is current and correct. This information may consist of, but is not necessary limited, to:

-- Information supplied by the client regarding the structure itself, antenna, mounts and feed line loading on the structure and its components, or other relevant information.

-- Information from drawings in the possession of American Tower Corporation, or generated by field inspections or measurements of the structure.

It is the responsibility of the client to ensure that the information provided to ATC Tower Services LLC and used in the performance of our engineering services is correct and complete. In the absence of information to the contrary, we assume that all structures were constructed in accordance with the drawings and specifications and that their capacity has not significantly changed from the "as new" condition.

Unless explicitly agreed by both the client and American Tower Corporation, all services will be performed in accordance with the current revision of ANSI/TIA -222. The design basic wind speed will be determined based on the minimum basic wind speed as prescribed in ANSI/TIA-222. Although every effort is taken to ensure that the loading considered is adequate to meet the requirements of all applicable regulatory entities, we can provide no assurance to meet any other local and state codes or requirements. If wind and ice loads or other relevant parameters are to be different from the minimum values recommended by the codes, the client shall specify the exact requirement.

All services are performed, results obtained, and recommendations made in accordance with generally accepted engineering principles and practices. ATC Tower Services LLC is not responsible for the conclusions, opinions and recommendations made by others based on the information we supply.

Reviewed for Code Compliance
Inspections Division
Approved with Conditions
Date: 11/27/17

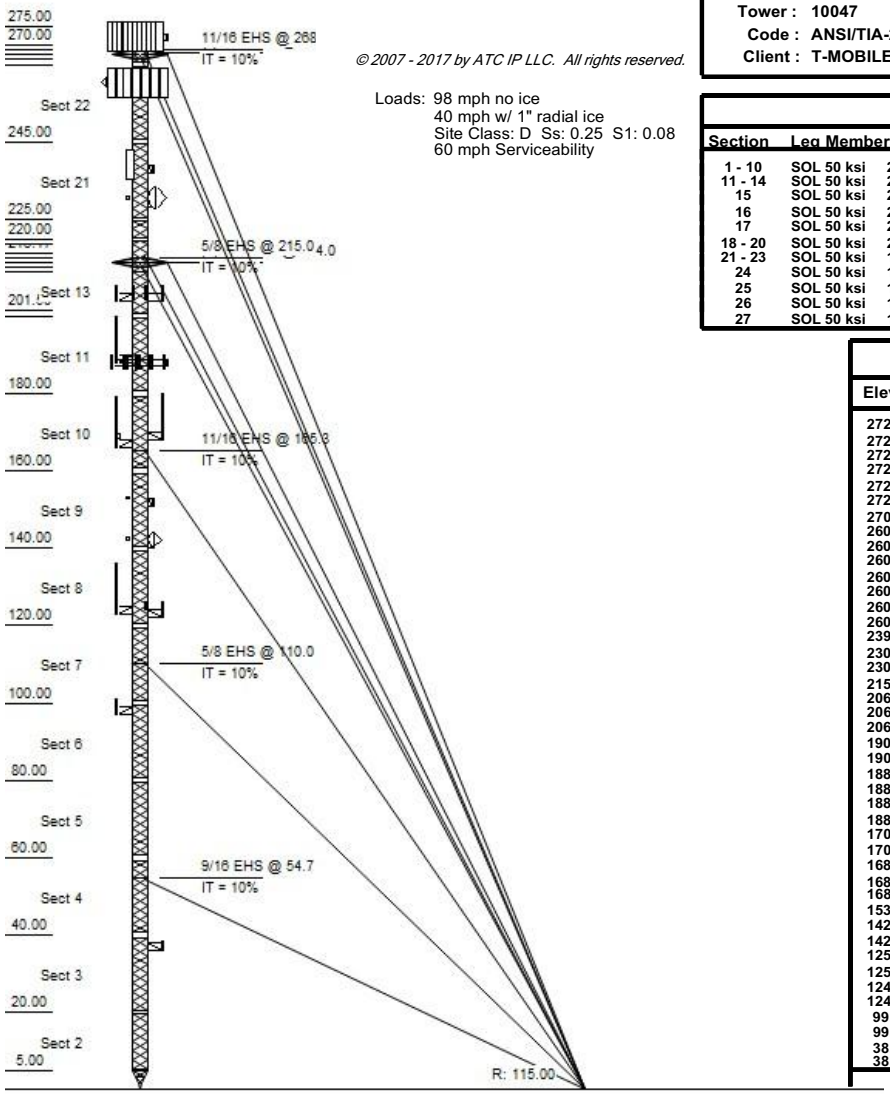

© 2007 - 2017 by ATC IP LLC. All rights reserved.

Loads: 98 mph no ice
40 mph w/ 1" radial ice
Site Class: D Ss: 0.25 S1: 0.08
60 mph Serviceability

Job Information

Tower : 10047 Location : PORTLAND ME, ME
Code : ANSI/TIA-222-G Shape : Triangle Base Width : 3.50 ft
Client : T-MOBILE

Sections Properties

Section	Leg Members		Diagonal Members	Horizontal Members
1 - 10	SOL 50 ksi	2 1/4" SOLID	SOL 50 ksi 3/4" SOLID	SOL 50 ksi 3/4" SOLID
11 - 14	SOL 50 ksi	2" SOLID	SOL 50 ksi 3/4" SOLID	SOL 50 ksi 3/4" SOLID
15	SOL 50 ksi	2" SOLID	SOL 50 ksi 3/4" SOLID	PL 50 ksi PL 3 x 0.375
16	SOL 50 ksi	2" SOLID	SOL 50 ksi 3/4" SOLID	SOL 50 ksi 3/4" SOLID
17	SOL 50 ksi	2" SOLID	SOL 50 ksi 3/4" SOLID	PL 50 ksi PL 3 x 0.375
18 - 20	SOL 50 ksi	2" SOLID	SOL 50 ksi 3/4" SOLID	SOL 50 ksi 3/4" SOLID
21 - 23	SOL 50 ksi	1 3/4" SOLID	SOL 50 ksi 3/4" SOLID	SOL 50 ksi 3/4" SOLID
24	SOL 50 ksi	1 3/4" SOLID	SOL 50 ksi 3/4" SOLID	PL 50 ksi PL 3 x 0.375
25	SOL 50 ksi	1 3/4" SOLID	SOL 50 ksi 3/4" SOLID	SOL 50 ksi 3/4" SOLID
26	SOL 50 ksi	1 3/4" SOLID	SOL 50 ksi 3/4" SOLID	PL 50 ksi PL 3 x 0.375
27	SOL 50 ksi	1 3/4" SOLID	SOL 50 ksi 3/4" SOLID	SOL 50 ksi 3/4" SOLID

Discrete Appurtenance

Elev (ft)	Type	Qty	Description
272.00	Panel	12	Commscope SBNHH-1D65C (96.6")
272.00	Panel	3	Alcatel-Lucent B66a RRH4x45 (A
272.00	Panel	3	Alcatel-Lucent B25 RRH4x30-4R
272.00	Panel	3	Alcatel-Lucent B13 RRH4x30-4R
272.00	Panel	2	Raycap RxxDC-3315-PF-48
272.00	Mounting Frame	3	Flat Light Sector Frame
270.00	Other	1	Torque Arms
260.00	Panel	3	RFS APXVAA24_43-U-A20
260.00	Panel	3	Ericsson Radio 4478 B71
260.00	Panel	3	RFS ATMA4P4DBP-VA20
260.00	Panel	3	Andrew ETW200VS12UB
260.00	Panel	3	RFS APX16DWV-16DWV-S-E-ACU
260.00	Dish	1	Radio Waves G3-2.4
260.00	Mounting Frame	3	Round Sector Frame
239.00	Panel	1	RAC 8' Ice Shield
230.00	Dish	1	Radio Waves HPD6-4.7NS
230.00	Panel	1	Motorola PTP 45600
215.00	Other	1	Torque Arms
206.00	Straight Arm	3	Stand-Off
206.00	Panel	3	KMW HB-X-WM-17-65-00T
206.00	Panel	3	KMW HB-X-WM-17-65-00T-TTLNA (w
190.00	Straight Arm	1	Stand-Off
190.00	Whip	1	10' Omni
188.00	Panel	3	Ericsson RRUS-11 (50 lbs.)
188.00	Panel	6	KMW AM-X-CD-17-65-00T-RET
188.00	Panel	1	Raycap RUSDC-6267-PF-48
188.00	Mounting Frame	3	Round Sector Frame
170.00	Straight Arm	1	Stand-Off
170.00	Whip	1	10' Omni
168.00	Panel	1	TX RX Systems 421-83A-01261
168.00	Straight Arm	1	Stand-Off
168.00	Whip	1	Bird BA40-41-DIN
153.00	Panel	1	6' Ice Shield
142.00	Dish	1	Radio Waves HPD4-4.7
142.00	Panel	1	Motorola PTP 45600
125.00	Whip	1	Bird BA40-41-DIN
125.00	Straight Arm	1	Stand-Off
124.00	Straight Arm	1	Stand-Off
124.00	Whip	2	2' Omni
99.00	Straight Arm	1	Stand-Off
99.00	Whip	1	2' Omni
38.00	Whip	1	2" X 8" GPS
38.00	Straight Arm	1	Stand-Off

Reviewed for Code Compliance
Inspections Division
Approved with Conditions
Date: 11/27/17

Job Information

Tower : 10047
Code : ANSI/TIA-222-G
Client : T-MOBILE
Location : PORTLAND ME, ME
Shape : Triangle
Base Width : 3.50 ft

© 2007 - 2017 by ATC IP LLC. All rights reserved.

Linear Appurtenance

Elev (ft) From	To	Qty	Description
10.00	272.00	2	1 5/8" Hybriflex
10.00	272.00	2	1 5/8" Coax
10.00	272.00	6	1 5/8" Coax
10.00	272.00	3	1 5/8" Coax
10.00	272.00	6	1 5/8" Coax
10.00	260.00	1	1/2" Coax
10.00	260.00	12	1 5/8" Coax
10.00	260.00	1	1 1/4" Fiber
0.00	230.00	1	1/2" Coax
0.00	230.00	1	1 5/8" Coax
10.00	206.00	1	Waveguide
10.00	206.00	6	1 5/8" Coax
10.00	190.00	1	1 1/4" Coax
10.00	188.00	6	1 5/8" Coax
10.00	188.00	1	1 1/4" Fiber
10.00	170.00	1	7/8" Coax
10.00	168.00	1	7/8" Coax
10.00	168.00	1	1/2" Coax
10.00	142.00	2	1/4" Coax
10.00	142.00	1	1 5/8" Coax
10.00	125.00	1	7/8" Coax
10.00	124.00	1	7/8" Coax
10.00	124.00	1	1/2" Coax
10.00	99.00	1	1/2" Coax
10.00	38.00	1	1/4" Coax

Reviewed for Code Compliance
Inspections Division
Approved with Conditions
Date: 11/27/17

Job Information

Tower :	10047	Location :	PORTLAND ME, ME		
Code :	ANSI/TIA-222-G	Shape :	Triangle	Base Width :	3.50 ft
Client :	T-MOBILE				

© 2007 - 2017 by ATC IP LLC. All rights reserved.

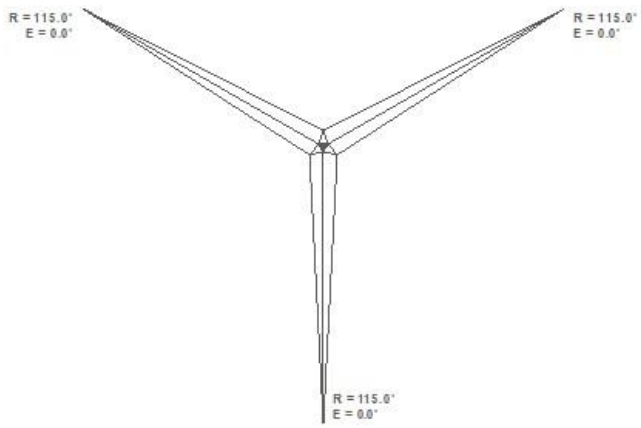

Guy Anchor Design Loads

Radius (ft)	Drop (ft)	Azimuth (°)	Uplift (kip)	Shear (kip)
115.00	0.00	0	100.30	65.75
115.00	0.00	240	100.26	65.76
115.00	0.00	120	100.30	65.75

Global Base Foundation Design Loads

Vertical (kip)	Horizontal (kip)
355.75	0.63

Site Number:	10047	Code:	ANSI/TIA-222-G	© 2007 - 2017 by ATC IP
Site Name:	PORTLAND ME, ME	Engineering Number:	OAA706994_C3_01	7/
Customer:	T-MOBILE			

Reviewed for Code Compliance
Inspections Division
Approved with Conditions
Date: 11/27/17

Analysis Parameters

Location:	CUMBERLAND County, ME	Height (ft):	275
Code:	ANSI/TIA-222-G	Base Elevation (ft):	0.00
Shape:	Triangle	Bottom Face Width (ft):	3.50
Tower Manufacturer:	Pirod	Top Face Width (ft):	3.50
Tower Type:	Guyed		

Ice & Wind Parameters

Structure Class:	II	Design Windspeed Without Ice:	98 mph
Exposure Category:	B	Design Windspeed With Ice:	40 mph
Topographic Category:	1	Operational Windspeed:	60 mph
Crest Height:	0.0 ft	Design Ice Thickness:	1.00 in

Seismic Parameters

Analysis Method:	Equivalent Modal Analysis & Equivalent Lateral Force Methods
Site Class:	D - Stiff Soil
Period Based on Rayleigh Method (sec):	0.87

T_L (sec):	6	p:	1.3	C_S:	0.058
S_S :	0.245	S_1 :	0.079	C_S, Max:	0.058
F_a :	1.600	F_V :	2.400	C_S, Min:	0.030
S_{ds} :	0.261	S_{d1} :	0.126		

Load Cases

1.2D + 1.6W Normal	98 mph Normal to Face with No Ice
1.2D + 1.6W 60 deg	98 mph 60 degree with No Ice
1.2D + 1.6W 90 deg	98 mph 90 degree with No Ice
1.2D + 1.6W 120 deg	98 mph 120 degree with No Ice
1.2D + 1.6W 180 deg	98 mph 180 degree with No Ice
1.2D + 1.6W 210 deg	98 mph 210 degree with No Ice
1.2D + 1.6W 240 deg	98 mph 240 degree with No Ice
1.2D + 1.6W 300 deg	98 mph 300 degree with No Ice
1.2D + 1.6W 330 deg	98 mph 330 degree with No Ice
1.2D + 1.0Di + 1.0Wi Normal	40 mph Normal with 1 in Radial Ice
1.2D + 1.0Di + 1.0Wi 60 deg	40 mph 60 deg with 1 in Radial Ice
1.2D + 1.0Di + 1.0Wi 90 deg	40 mph 90 deg with 1 in Radial Ice
1.2D + 1.0Di + 1.0Wi 120 deg	40 mph 120 deg with 1 in Radial Ice
1.2D + 1.0Di + 1.0Wi 180 deg	40 mph 180 deg with 1 in Radial Ice
1.2D + 1.0Di + 1.0Wi 210 deg	40 mph 210 deg with 1 in Radial Ice
1.2D + 1.0Di + 1.0Wi 240 deg	40 mph 240 deg with 1 in Radial Ice
1.2D + 1.0Di + 1.0Wi 300 deg	40 mph 300 deg with 1 in Radial Ice
1.2D + 1.0Di + 1.0Wi 330 deg	40 mph 330 deg with 1 in Radial Ice
(1.2 + 0.2Sds) * DL + E Normal	Seismic Normal
(1.2 + 0.2Sds) * DL + E 60 deg	Seismic 60 deg
(1.2 + 0.2Sds) * DL + E 90 deg	Seismic 90 deg

© 2007 - 2017 by ATC IP

Reviewed for Code Compliance
Inspections Division
Approved with Conditions
Date: 11/27/17

Analysis Parameters

(1.2 + 0.2Sds) * DL + E 120 deg	Seismic 120 deg
(1.2 + 0.2Sds) * DL + E 180 deg	Seismic 180 deg
(1.2 + 0.2Sds) * DL + E 210 deg	Seismic 210 deg
(1.2 + 0.2Sds) * DL + E 240 deg	Seismic 240 deg
(1.2 + 0.2Sds) * DL + E 300 deg	Seismic 300 deg
(1.2 + 0.2Sds) * DL + E 330 deg	Seismic 330 deg
(0.9 - 0.2Sds) * DL + E Normal	Seismic (Reduced DL) Normal
(0.9 - 0.2Sds) * DL + E 60 deg	Seismic (Reduced DL) 60 deg
(0.9 - 0.2Sds) * DL + E 90 deg	Seismic (Reduced DL) 90 deg
(0.9 - 0.2Sds) * DL + E 120 deg	Seismic (Reduced DL) 120 deg
(0.9 - 0.2Sds) * DL + E 180 deg	Seismic (Reduced DL) 180 deg
(0.9 - 0.2Sds) * DL + E 210 deg	Seismic (Reduced DL) 210 deg
(0.9 - 0.2Sds) * DL + E 240 deg	Seismic (Reduced DL) 240 deg
(0.9 - 0.2Sds) * DL + E 300 deg	Seismic (Reduced DL) 300 deg
(0.9 - 0.2Sds) * DL + E 330 deg	Seismic (Reduced DL) 330 deg
1.0D + 1.0W Service Normal	Serviceability - 60 mph Wind Normal
1.0D + 1.0W Service 60 deg	Serviceability - 60 mph Wind 60 deg
1.0D + 1.0W Service 90 deg	Serviceability - 60 mph Wind 90 deg
1.0D + 1.0W Service 120 deg	Serviceability - 60 mph Wind 120 deg
1.0D + 1.0W Service 180 deg	Serviceability - 60 mph Wind 180 deg
1.0D + 1.0W Service 210 deg	Serviceability - 60 mph Wind 210 deg
1.0D + 1.0W Service 240 deg	Serviceability - 60 mph Wind 240 deg
1.0D + 1.0W Service 300 deg	Serviceability - 60 mph Wind 300 deg
1.0D + 1.0W Service 330 deg	Serviceability - 60 mph Wind 330 deg

CITY OF PORTLAND, MAINE RESURGAM
Reviewed for Code Compliance
Inspections Division
Approved with Conditions
Date: 11/27/17

Tower Loading

Discrete Appurtenance Properties 1.2D + 1.6W

Elevation (ft)	Description	Qty	Wt. (lb)	EPA (sf)	Length (ft)	Width (in)	Depth (in)	K_a	Orient. Factor	Vert. Ecc.(ft)	M_u (lb-ft)	Q_z (psf)	F_a (WL) (lb)	P_a (DL) (lb)
272.0	Alcatel-Lucent B13	3	58	2.1	1.8	12.0	8.9	0.80	0.67	0.0	0.0	27.49	129	250
272.0	Alcatel-Lucent B25	3	51	2.1	1.8	12.0	7.2	0.80	0.67	0.0	0.0	27.49	129	220
272.0	Raycap RxxDC-3315-	2	21	2.5	1.6	15.7	10.3	0.80	0.67	0.0	0.0	27.49	101	62
272.0	Alcatel-Lucent B66a	3	67	2.7	2.2	12.0	6.8	0.80	0.67	0.0	0.0	27.49	160	289
272.0	Commscope SBNHH-	12	50	11.5	8.1	11.9	7.1	0.80	0.70	0.0	0.0	27.49	2881	857
272.0	Flat Light Sector	3	400	17.9	0.0	0.0	0.0	0.75	0.67	0.0	0.0	27.49	1009	1728
270.0	Torque Arms	1	500	15.0	0.0	0.0	0.0	1.00	1.00	0.0	0.0	27.43	560	720
260.0	Andrew	3	11	0.5	0.5	7.7	3.0	0.80	0.50	0.0	0.0	27.14	21	48
260.0	RFS ATMA4P4DBP-	3	16	0.9	0.9	8.0	4.9	0.80	0.50	0.0	0.0	27.14	39	69
260.0	Ericsson Radio 4478	3	60	1.6	1.3	13.2	7.4	0.80	0.50	0.0	0.0	27.14	73	259
260.0	Radio Waves G3-2.4	1	25	4.2	3.0	36.0	0.0	0.80	1.00	0.0	0.0	27.14	124	36
260.0	RFS APX16DWV-	3	40	6.1	4.4	13.0	3.1	0.80	0.60	0.0	0.0	27.14	323	171
260.0	Round Sector Frame	3	300	14.4	0.0	0.0	0.0	0.75	0.67	0.0	0.0	27.14	801	1296
260.0	RFS APXVAA24_43-	3	101	20.3	8.0	24.0	8.5	0.80	0.63	0.0	0.0	27.14	1131	438
239.0	RAC 8' Ice Shield	1	600	6.0	8.0	60.0	24.0	1.00	1.00	0.0	0.0	26.49	216	864
230.0	Motorola PTP 45600	1	12	2.0	1.2	14.5	3.7	1.00	0.50	0.0	0.0	26.20	36	17
230.0	Radio Waves HPD6-	1	405	44.0	6.0	0.0	0.0	1.00	1.00	0.0	0.0	26.20	1568	583
215.0	Torque Arms	1	500	15.0	0.0	0.0	0.0	1.00	1.00	0.0	0.0	25.70	524	720
206.0	KMW HB-X-WM-17-	3	16	1.0	1.3	7.3	3.7	0.80	0.76	0.0	0.0	25.39	61	69
206.0	KMW HB-X-WM-17-	3	30	2.0	4.0	7.3	7.3	0.80	1.00	0.0	0.0	25.39	162	130
206.0	Stand-Off	3	100	3.0	0.0	0.0	0.0	1.00	1.00	0.0	0.0	25.39	311	432
190.0	10' Omni	1	25	3.0	10.0	3.0	3.0	1.00	1.00	5.0	509.9	24.99	102	36
190.0	Stand-Off	1	100	3.0	0.0	0.0	0.0	1.00	1.00	0.0	0.0	24.81	101	144
188.0	Raycap RUSDC-6267-	1	16	2.5	1.6	16.1	5.6	0.80	0.67	0.0	0.0	24.73	46	23
188.0	Ericsson RRUS-11	3	50	2.6	1.5	17.3	7.2	0.80	0.67	0.0	0.0	24.73	139	216
188.0	KMW AM-X-CD-17-	6	31	5.0	4.0	11.8	6.0	0.80	0.66	0.0	0.0	24.73	532	266
188.0	Round Sector Frame	3	300	14.4	0.0	0.0	0.0	0.75	0.67	0.0	0.0	24.73	730	1296
170.0	10' Omni	1	25	3.0	10.0	3.0	3.0	1.00	1.00	5.0	494.4	24.23	99	36
170.0	Stand-Off	1	100	3.0	0.0	0.0	0.0	1.00	1.00	0.0	0.0	24.03	98	144
168.0	Stand-Off	1	100	3.0	0.0	0.0	0.0	1.00	1.00	0.0	0.0	23.95	98	144
168.0	TX RX Systems 421-	1	20	3.1	1.7	16.0	6.0	1.00	0.50	3.0	152.7	24.07	51	29
168.0	Bird BA40-41-DIN	1	32	5.1	11.5	0.0	0.0	1.00	1.00	6.0	997.0	24.19	166	46
153.0	6' Ice Shield	1	450	3.9	1.2	100.0	48.0	1.00	1.00	0.0	0.0	23.32	123	648
142.0	Motorola PTP 45600	1	12	2.0	1.2	14.5	3.7	1.00	1.00	0.0	0.0	22.83	63	17
142.0	Radio Waves HPD4-	1	85	15.9	4.0	0.0	0.0	1.00	1.00	0.0	0.0	22.83	492	122
125.0	Stand-Off	1	100	3.0	0.0	0.0	0.0	1.00	1.00	0.0	0.0	22.01	90	144
125.0	Bird BA40-41-DIN	1	32	5.1	11.5	0.0	0.0	1.00	1.00	6.0	919.3	22.31	153	46
124.0	2' Omni	2	5	0.3	2.0	2.0	2.0	1.00	1.00	1.0	18.0	22.01	18	14
124.0	Stand-Off	1	100	3.0	0.0	0.0	0.0	1.00	1.00	0.0	0.0	21.96	90	144
99.00	2' Omni	1	5	0.3	2.0	2.0	2.0	1.00	1.00	1.0	8.4	20.65	8	7
99.00	Stand-Off	1	100	3.0	0.0	0.0	0.0	1.00	1.00	0.0	0.0	20.59	84	144
38.00	2" X 8" GPS	1	10	0.2	0.7	2.0	2.0	1.00	1.00	0.0	0.0	15.66	3	14
38.00	Stand-Off	1	100	3.0	0.0	0.0	0.0	1.00	1.00	0.0	0.0	15.66	64	144
	Totals	91	9086	598.8										

Discrete Appurtenance Properties 1.2D + 1.0Di + 1.0Wi

Elevation (ft)	Description	Qty	Ice Wt (lb)	Ice EPA (sf)	Length (ft)	Width (in)	Depth (in)	K_a	Orient. Factor	Vert. Ecc.(ft)	M_u (lb-ft)	Q_z (psf)	F_a (WL) (lb)	P_a (DL) (lb)
272.0	Alcatel-Lucent B13	3	184	3.1	1.8	12.0	8.9	0.80	0.67	0.0	0.0	4.58	19	703
272.0	Alcatel-Lucent B25	3	166	3.1	1.8	12.0	7.2	0.80	0.67	0.0	0.0	4.58	19	636
272.0	Raycap RxxDC-3315-	2	167	3.5	1.6	15.7	10.3	0.80	0.67	0.0	0.0	4.58	14	411

CITY OF PORTLAND, MAINE RESURGAM
Reviewed for Code Compliance
Inspections Division
Approved with Conditions
Date: 11/27/17

Tower Loading

272.0	Alcatel-Lucent B66a	3	200	3.7	2.2	12.0	6.8	0.80	0.67	0.0	0.0	4.58	23	769
272.0	Commscope SBNHH-	12	330	17.1	8.1	11.9	7.1	0.80	0.70	0.0	0.0	4.58	447	4901
272.0	Flat Light Sector	3	827	39.3	0.0	0.0	0.0	0.75	0.67	0.0	0.0	4.58	231	3265
270.0	Torque Arms	1	993	29.8	0.0	0.0	0.0	1.00	1.00	0.0	0.0	4.57	116	1312
260.0	Andrew	3	42	0.9	0.5	7.7	3.0	0.80	0.50	0.0	0.0	4.52	4	161
260.0	RFS ATMA4P4DBP-	3	68	1.3	0.9	8.0	4.9	0.80	0.50	0.0	0.0	4.52	6	255
260.0	Ericsson Radio 4478	3	156	2.4	1.3	13.2	7.4	0.80	0.50	0.0	0.0	4.52	11	606
260.0	Radio Waves G3-2.4	1	148	41.3	3.0	36.0	0.0	0.80	1.00	0.0	0.0	4.52	127	183
260.0	RFS APX16DWV-	3	240	7.6	4.4	13.0	3.1	0.80	0.60	0.0	0.0	4.52	42	891
260.0	Round Sector Frame	3	818	37.7	0.0	0.0	0.0	0.75	0.67	0.0	0.0	4.52	219	3162
260.0	RFS APXVAA24_43-	3	734	23.0	8.0	24.0	8.5	0.80	0.63	0.0	0.0	4.52	134	2716
239.0	RAC 8' Ice Shield	1	2154	14.8	8.0	60.0	24.0	1.00	1.00	0.0	0.0	4.41	56	2729
230.0	Motorola PTP 45600	1	91	2.6	1.2	14.5	3.7	1.00	0.50	0.0	0.0	4.37	5	112
230.0	Radio Waves HPD6-	1	1832	50.0	6.0	0.0	0.0	1.00	1.00	0.0	0.0	4.37	186	2296
215.0	Torque Arms	1	982	29.5	0.0	0.0	0.0	1.00	1.00	0.0	0.0	4.28	107	1299
206.0	KMW HB-X-WM-17-	3	71	1.6	1.3	7.3	3.7	0.80	0.76	0.0	0.0	4.23	11	267
206.0	KMW HB-X-WM-17-	3	198	4.6	4.0	7.3	7.3	0.80	1.00	0.0	0.0	4.23	40	734
206.0	Stand-Off	3	167	5.2	0.0	0.0	0.0	1.00	1.00	0.0	0.0	4.23	56	674
190.0	10' Omni	1	234	6.7	10.0	3.0	3.0	1.00	1.00	5.0	119.2	4.16	24	287
190.0	Stand-Off	1	167	5.1	0.0	0.0	0.0	1.00	1.00	0.0	0.0	4.13	18	224
188.0	Raycap RUSDC-6267-	1	127	3.5	1.6	16.1	5.6	0.80	0.67	0.0	0.0	4.12	7	156
188.0	Ericsson RRUS-11	3	171	3.5	1.5	17.3	7.2	0.80	0.67	0.0	0.0	4.12	20	652
188.0	KMW AM-X-CD-17-	6	226	6.4	4.0	11.8	6.0	0.80	0.66	0.0	0.0	4.12	71	1669
188.0	Round Sector Frame	3	803	37.0	0.0	0.0	0.0	0.75	0.67	0.0	0.0	4.12	196	3108
170.0	10' Omni	1	230	6.7	10.0	3.0	3.0	1.00	1.00	5.0	115.0	4.04	23	282
170.0	Stand-Off	1	166	5.1	0.0	0.0	0.0	1.00	1.00	0.0	0.0	4.00	17	223
168.0	Stand-Off	1	166	5.1	0.0	0.0	0.0	1.00	1.00	0.0	0.0	3.99	17	223
168.0	TX RX Systems 421-	1	135	3.6	1.7	16.0	6.0	1.00	0.50	3.0	18.4	4.01	6	167
168.0	Bird BA40-41-DIN	1	121	18.3	11.5	0.0	0.0	1.00	1.00	6.0	377.0	4.03	63	153
153.0	6' Ice Shield	1	1565	9.4	1.2	100.0	48.0	1.00	1.00	0.0	0.0	3.89	31	1985
142.0	Motorola PTP 45600	1	86	2.5	1.2	14.5	3.7	1.00	1.00	0.0	0.0	3.80	8	106
142.0	Radio Waves HPD4-	1	298	19.0	4.0	0.0	0.0	1.00	1.00	0.0	0.0	3.80	61	378
125.0	Stand-Off	1	164	5.1	0.0	0.0	0.0	1.00	1.00	0.0	0.0	3.67	16	221
125.0	Bird BA40-41-DIN	1	118	18.0	11.5	0.0	0.0	1.00	1.00	6.0	340.9	3.72	57	150
124.0	2' Omni	2	42	1.0	2.0	2.0	2.0	1.00	1.00	1.0	6.0	3.67	6	103
124.0	Stand-Off	1	164	5.1	0.0	0.0	0.0	1.00	1.00	0.0	0.0	3.66	16	221
99.00	2' Omni	1	40	0.9	2.0	2.0	2.0	1.00	1.00	1.0	2.8	3.44	3	49
99.00	Stand-Off	1	162	5.0	0.0	0.0	0.0	1.00	1.00	0.0	0.0	3.43	15	218
38.00	2" X 8" GPS	1	23	0.3	0.7	2.0	2.0	1.00	1.00	0.0	0.0	2.61	1	30
38.00	Stand-Off	1	155	4.8	0.0	0.0	0.0	1.00	1.00	0.0	0.0	2.61	11	211
	Totals	91	30598	1066.2										

Discrete Appurtenance Properties 1.0D + 1.0W Service

Elevation (ft)	Description	Qty	Wt. (lb)	EPA (sf)	Length (ft)	Width (in)	Depth (in)	K_a	Orient. Factor	Vert. Ecc.(ft)	M_u (lb-ft)	Q_z (psf)	F_a (WL) (lb)	P_a (DL) (lb)
272.0	Alcatel-Lucent B13	3	58	2.1	1.8	12.0	8.9	0.80	0.67	0.0	0.0	10.30	30	173
272.0	Alcatel-Lucent B25	3	51	2.1	1.8	12.0	7.2	0.80	0.67	0.0	0.0	10.30	30	153
272.0	Raycap RxxDC-3315-	2	21	2.5	1.6	15.7	10.3	0.80	0.67	0.0	0.0	10.30	24	43
272.0	Alcatel-Lucent B66a	3	67	2.7	2.2	12.0	6.8	0.80	0.67	0.0	0.0	10.30	37	201
272.0	Commscope SBNHH-	12	50	11.5	8.1	11.9	7.1	0.80	0.70	0.0	0.0	10.30	675	595
272.0	Flat Light Sector	3	400	17.9	0.0	0.0	0.0	0.75	0.67	0.0	0.0	10.30	236	1200
270.0	Torque Arms	1	500	15.0	0.0	0.0	0.0	1.00	1.00	0.0	0.0	10.28	131	500
260.0	Andrew	3	11	0.5	0.5	7.7	3.0	0.80	0.50	0.0	0.0	10.17	5	33
260.0	RFS ATMA4P4DBP-	3	16	0.9	0.9	8.0	4.9	0.80	0.50	0.0	0.0	10.17	9	48
260.0	Ericsson Radio 4478	3	60	1.6	1.3	13.2	7.4	0.80	0.50	0.0	0.0	10.17	17	180

Site Number: 10047 | Code: ANSI/TIA-222-G | © 2007 - 2017 by ATC IP

Site Name: PORTLAND ME, ME | Engineering Number: OAA706994_C3_01 | 7/

Customer: T-MOBILE

Reviewed for Code Compliance
Inspections Division
Approved with Conditions
Date: 11/27/17

Tower Loading

260.0	Radio Waves G3-2.4	1	25	4.2	3.0	36.0	0.0	0.80	1.00	0.0	0.0	10.17	29	25
260.0	RFS APX16DWV-	3	40	6.1	4.4	13.0	3.1	0.80	0.60	0.0	0.0	10.17	76	119
260.0	Round Sector Frame	3	300	14.4	0.0	0.0	0.0	0.75	0.67	0.0	0.0	10.17	188	900
260.0	RFS APXVAA24_43-	3	101	20.3	8.0	24.0	8.5	0.80	0.63	0.0	0.0	10.17	265	304
239.0	RAC 8' Ice Shield	1	600	6.0	8.0	60.0	24.0	1.00	1.00	0.0	0.0	9.93	51	600
230.0	Motorola PTP 45600	1	12	2.0	1.2	14.5	3.7	1.00	0.50	0.0	0.0	9.82	9	12
230.0	Radio Waves HPD6-	1	405	44.0	6.0	0.0	0.0	1.00	1.00	0.0	0.0	9.82	367	405
215.0	Torque Arms	1	500	15.0	0.0	0.0	0.0	1.00	1.00	0.0	0.0	9.63	123	500
206.0	KMW HB-X-WM-17-	3	16	1.0	1.3	7.3	3.7	0.80	0.76	0.0	0.0	9.52	14	48
206.0	KMW HB-X-WM-17-	3	30	2.0	4.0	7.3	7.3	0.80	1.00	0.0	0.0	9.52	38	90
206.0	Stand-Off	3	100	3.0	0.0	0.0	0.0	1.00	1.00	0.0	0.0	9.52	73	300
190.0	10' Omni	1	25	3.0	10.0	3.0	3.0	1.00	1.00	5.0	119.5	9.37	24	25
190.0	Stand-Off	1	100	3.0	0.0	0.0	0.0	1.00	1.00	0.0	0.0	9.30	24	100
188.0	Raycap RUSDC-6267-	1	16	2.5	1.6	16.1	5.6	0.80	0.67	0.0	0.0	9.27	11	16
188.0	Ericsson RRUS-11	3	50	2.6	1.5	17.3	7.2	0.80	0.67	0.0	0.0	9.27	33	150
188.0	KMW AM-X-CD-17-	6	31	5.0	4.0	11.8	6.0	0.80	0.66	0.0	0.0	9.27	125	185
188.0	Round Sector Frame	3	300	14.4	0.0	0.0	0.0	0.75	0.67	0.0	0.0	9.27	171	900
170.0	10' Omni	1	25	3.0	10.0	3.0	3.0	1.00	1.00	5.0	115.8	9.08	23	25
170.0	Stand-Off	1	100	3.0	0.0	0.0	0.0	1.00	1.00	0.0	0.0	9.01	23	100
168.0	Stand-Off	1	100	3.0	0.0	0.0	0.0	1.00	1.00	0.0	0.0	8.98	23	100
168.0	TX RX Systems 421-	1	20	3.1	1.7	16.0	6.0	1.00	0.50	3.0	35.8	9.02	12	20
168.0	Bird BA40-41-DIN	1	32	5.1	11.5	0.0	0.0	1.00	1.00	6.0	233.6	9.07	39	32
153.0	6' Ice Shield	1	450	3.9	1.2	100.0	48.0	1.00	1.00	0.0	0.0	8.74	29	450
142.0	Motorola PTP 45600	1	12	2.0	1.2	14.5	3.7	1.00	1.00	0.0	0.0	8.56	15	12
142.0	Radio Waves HPD4-	1	85	15.9	4.0	0.0	0.0	1.00	1.00	0.0	0.0	8.56	115	85
125.0	Stand-Off	1	100	3.0	0.0	0.0	0.0	1.00	1.00	0.0	0.0	8.25	21	100
125.0	Bird BA40-41-DIN	1	32	5.1	11.5	0.0	0.0	1.00	1.00	6.0	215.4	8.36	36	32
124.0	2' Omni	2	5	0.3	2.0	2.0	2.0	1.00	1.00	1.0	4.2	8.25	4	10
124.0	Stand-Off	1	100	3.0	0.0	0.0	0.0	1.00	1.00	0.0	0.0	8.23	21	100
99.00	2' Omni	1	5	0.3	2.0	2.0	2.0	1.00	1.00	1.0	2.0	7.74	2	5
99.00	Stand-Off	1	100	3.0	0.0	0.0	0.0	1.00	1.00	0.0	0.0	7.72	20	100
38.00	2" X 8" GPS	1	10	0.2	0.7	2.0	2.0	1.00	1.00	0.0	0.0	5.87	1	10
38.00	Stand-Off	1	100	3.0	0.0	0.0	0.0	1.00	1.00	0.0	0.0	5.87	15	100
	Totals	91	9086	598.8										

Reviewed for Code Compliance
Inspections Division
Approved with Conditions
Date: 11/27/17

Tower Loading

Linear Appurtenance Properties

Elev From (ft)	Elev To (ft)	Description	Qty	Width (in)	Weight (lb/ft)	Pct In Block	Spread On Faces	Bundling Arrangement	Cluster Dia (in)	Out Of Zone	Spacing (in)	Orientation Factor	Ka Override
10.00	272.0	1 5/8" Coax	6	1.98	0.82	33	2	Block	0.00	N	0.67	1.00	0.86
10.00	272.0	1 5/8" Coax	3	1.98	0.82	0	3	Individual	0.00	N	1.00	1.00	0.01
10.00	272.0	1 5/8" Coax	6	1.98	0.82	0	Lin App	Individual	0.00	N	1.00	1.00	0.00
10.00	272.0	1 5/8" Coax	2	1.98	0.82	0	2	Individual	0.00	N	1.00	1.00	0.52
10.00	272.0	1 5/8" Hybriflex	2	1.98	1.30	0	Lin App	Individual	0.00	N	1.00	1.00	0.01
10.00	260.0	1 1/4" Fiber	1	1.25	1.05	0	Lin App	Individual	0.00	N	1.00	1.00	0.00
10.00	260.0	1 5/8" Coax	12	1.98	0.82	0	3	Cluster	7.92	N	0.50	1.00	0.00
10.00	260.0	1/2" Coax	1	0.63	0.15	0	Lin App	Individual	0.00	N	1.00	1.00	0.01
0.00	230.0	1 5/8" Coax	1	1.98	0.82	0	3	Individual	0.00	N	1.00	1.00	0.43
0.00	230.0	1/2" Coax	1	0.63	0.15	0	Lin App	Individual	0.00	N	1.00	1.00	0.40
10.00	206.0	1 5/8" Coax	6	1.98	0.82	50	1	Block	0.00	N	1.00	1.00	0.00
10.00	206.0	Waveguide	1	1.00	6.00	0	1	Individual	0.00	N	1.00	1.00	0.00
10.00	190.0	1 1/4" Coax	1	1.55	0.66	0	Lin App	Individual	0.00	N	1.00	1.00	0.00
10.00	188.0	1 1/4" Fiber	1	1.25	1.05	0	Lin App	Individual	0.00	N	1.00	1.00	0.00
10.00	188.0	1 5/8" Coax	6	1.98	1.04	33	Lin App	Block	0.00	N	0.67	1.00	0.86
10.00	170.0	7/8" Coax	1	1.09	0.33	0	Lin App	Individual	0.00	N	1.00	1.00	0.01
10.00	168.0	1/2" Coax	1	0.63	0.15	0	Lin App	Individual	0.00	N	1.00	1.00	0.00
10.00	168.0	7/8" Coax	1	1.09	0.33	0	Lin App	Individual	0.00	N	1.00	1.00	0.00
10.00	142.0	1 5/8" Coax	1	1.98	0.82	0	Lin App	Individual	0.00	N	1.00	1.00	0.00
10.00	142.0	1/4" Coax	2	0.34	0.06	0	Lin App	Individual	0.00	N	1.00	1.00	0.01
10.00	125.0	7/8" Coax	1	1.09	0.33	0	Lin App	Individual	0.00	N	1.00	1.00	0.00
10.00	124.0	1/2" Coax	1	0.63	0.15	0	Lin App	Individual	0.00	N	1.00	1.00	0.01
10.00	124.0	7/8" Coax	1	1.09	0.33	0	Lin App	Individual	0.00	N	1.00	1.00	0.00
10.00	99.00	1/2" Coax	1	0.63	0.15	0	3	Individual	0.00	N	1.00	1.00	0.59
10.00	38.00	1/4" Coax	1	0.34	0.06	0	3	Individual	0.00	N	1.00	1.00	0.00

Reviewed for Code Compliance
Inspections Division
Approved with Conditions
Date: 11/27/17

Equivalent Lateral Force Method

(Based on ASCE7-10 Chapters 11, 12 & 15)

Spectral Response Acceleration for Short Period (S_s):	0.25
Spectral Response Acceleration at 1.0 Second Period (S_1):	0.08
Long-Period Transition Period (T_L Seconds):	6
Importance Factor (I_e):	1.00
Site Coefficient F_a:	1.60
Site Coefficient F_v:	2.40
Response Modification Coefficient (R):	2.50
Design Spectral Response Acceleration at Short Period (S_{ds}):	0.26
Design Spectral Response Acceleration at 1.0 Second Period (S_{d1}):	0.13
Seismic Response Coefficient (C_s):	0.06
Upper Limit C_s:	0.06
Lower Limit C_s:	0.03
Period based on Rayleigh Method (sec):	0.87
Redundancy Factor (p):	1.30
Seismic Force Distribution Exponent (k):	1.18
Total Unfactored Dead Load:	35.25 k
Seismic Base Shear (E):	2.68 k

LoadCase (1.2 + 0.2Sds) * DL + E Seismic

Section	Height Above Base (ft)	Weight (lb)	W_z (lb-ft)	C_{vx}	Horizontal Force (lb)	Vertical Force (lb)
27	272.50	246	187,056	0.013	35	308
26	269.42	107	80,419	0.006	15	134
25	268.25	83	61,761	0.004	12	104
24	267.08	107	79,561	0.006	15	134
23	265.75	95	70,087	0.005	13	119
22	255.00	1,323	930,133	0.066	176	1,656
21	235.00	1,384	883,870	0.063	167	1,733
20	222.50	409	244,745	0.017	46	512
19	219.25	124	73,049	0.005	14	156
18	217.33	179	104,405	0.007	20	225
17	215.58	130	74,914	0.005	14	163
16	214.42	129	73,999	0.005	14	162
15	213.25	130	73,918	0.005	14	163
14	212.08	113	64,122	0.005	12	142
13	206.50	810	444,110	0.031	84	1,015
12	200.75	141	74,495	0.005	14	176
11	190.00	1,831	909,040	0.064	172	2,293
10	170.00	2,118	922,068	0.065	174	2,652
9	150.00	2,113	793,340	0.056	150	2,646
8	130.00	2,134	676,275	0.048	128	2,672
7	110.00	2,162	562,385	0.040	106	2,708
6	90.00	2,149	440,882	0.031	83	2,691
5	70.00	2,149	327,511	0.023	62	2,692
4	50.00	2,165	221,575	0.016	42	2,711

CITY OF PORTLAND, MAINE RESURGAM
Reviewed for Code Compliance
Inspections Division
Approved with Conditions
Date: 11/27/17

Equivalent Lateral Force Method

3	30.00	2,150	120,253	0.009	23	2,693
2	12.50	1,376	27,321	0.002	5	1,724
1	2.50	308	910	0.000	0	385
Alcatel-Lucent B13 RRH4x30-4R	272.00	173	131,630	0.009	25	217
Alcatel-Lucent B25 RRH4x30-4R	272.00	153	116,144	0.008	22	192
Raycap RxxDC-3315-PF-48	272.00	43	32,490	0.002	6	54
Alcatel-Lucent B66a RRH4x45 (AWS-3)	272.00	201	152,581	0.011	29	252
Commscope SBNHH-1D65C (96.6")	272.00	595	451,822	0.032	86	745
Flat Light Sector Frame	272.00	1,200	910,931	0.064	172	1,503
Torque Arms	270.00	500	376,255	0.027	71	626
Andrew ETW200VS12UB	260.00	33	23,748	0.002	4	41
RFS ATMA4P4DBP-VA20	260.00	48	34,327	0.002	6	60
Ericsson Radio 4478 B71	260.00	180	129,537	0.009	25	225
Radio Waves G3-2.4	260.00	25	17,991	0.001	3	31
RFS APX16DWV-16DWV-S-E-ACU	260.00	119	85,494	0.006	16	149
Round Sector Frame	260.00	900	647,684	0.046	123	1,127
RFS APXVAA24_43-U-A20	260.00	304	218,917	0.015	41	381
RAC 8' Ice Shield	239.00	600	390,841	0.028	74	751
Motorola PTP 45600	230.00	12	7,532	0.001	1	15
Radio Waves HPD6-4.7NS	230.00	405	252,105	0.018	48	507
Torque Arms	215.00	500	287,372	0.020	54	626
KMW HB-X-WM-17-65-00T-TTLNA	206.00	48	26,063	0.002	5	60
KMW HB-X-WM-17-65-00T	206.00	90	49,175	0.003	9	113
Stand-Off	206.00	300	163,917	0.012	31	376
10' Omni	190.00	25	12,414	0.001	2	31
Stand-Off	190.00	100	49,655	0.004	9	125
Raycap RUSDC-6267-PF-48	188.00	16	7,748	0.001	1	20
Ericsson RRUS-11 (50 lbs.)	188.00	150	73,556	0.005	14	188
KMW AM-X-CD-17-65-00T-RET	188.00	185	90,620	0.006	17	231
Round Sector Frame	188.00	900	441,333	0.031	84	1,127
10' Omni	170.00	25	10,883	0.001	2	31
Stand-Off	170.00	100	43,532	0.003	8	125
Stand-Off	168.00	100	42,927	0.003	8	125
TX RX Systems 421-83A-01261	168.00	20	8,585	0.001	2	25
Bird BA40-41-DIN	168.00	32	13,737	0.001	3	40
6' Ice Shield	153.00	450	172,938	0.012	33	564
Motorola PTP 45600	142.00	12	4,257	0.000	1	15
Radio Waves HPD4-4.7	142.00	85	29,906	0.002	6	106
Stand-Off	125.00	100	30,257	0.002	6	125
Bird BA40-41-DIN	125.00	32	9,682	0.001	2	40
2' Omni	124.00	10	2,997	0.000	1	13
Stand-Off	124.00	100	29,971	0.002	6	125
2' Omni	99.00	5	1,148	0.000	0	6
Stand-Off	99.00	100	22,962	0.002	4	125
2" X 8" GPS	38.00	10	740	0.000	0	13
Stand-Off	38.00	100	7,396	0.001	1	125
		35,252	14,136,006	1.000	2,675	44,145

LoadCase (0.9 - 0.2Sds) * DL + E Seismic (Reduced DL)

Section	Height Above Base (ft)	Weight (lb)	W_z (lb-ft)	C_{vx}	Horizontal Force (lb)	Vertical Force (lb)
27	272.50	246	187,056	0.013	35	208
26	269.42	107	80,419	0.006	15	91

CITY OF PORTLAND, MAINE RESURGAM
Reviewed for Code Compliance
Inspections Division
Approved with Conditions
Date: 11/27/17

Equivalent Lateral Force Method

25	268.25	83	61,761	0.004	12	70
24	267.08	107	79,561	0.006	15	91
23	265.75	95	70,087	0.005	13	80
22	255.00	1,323	930,133	0.066	176	1,121
21	235.00	1,384	883,870	0.063	167	1,173
20	222.50	409	244,745	0.017	46	347
19	219.25	124	73,049	0.005	14	105
18	217.33	179	104,405	0.007	20	152
17	215.58	130	74,914	0.005	14	110
16	214.42	129	73,999	0.005	14	109
15	213.25	130	73,918	0.005	14	110
14	212.08	113	64,122	0.005	12	96
13	206.50	810	444,110	0.031	84	687
12	200.75	141	74,495	0.005	14	119
11	190.00	1,831	909,040	0.064	172	1,552
10	170.00	2,118	922,068	0.065	174	1,796
9	150.00	2,113	793,340	0.056	150	1,791
8	130.00	2,134	676,275	0.048	128	1,809
7	110.00	2,162	562,385	0.040	106	1,833
6	90.00	2,149	440,882	0.031	83	1,822
5	70.00	2,149	327,511	0.023	62	1,822
4	50.00	2,165	221,575	0.016	42	1,835
3	30.00	2,150	120,253	0.009	23	1,823
2	12.50	1,376	27,321	0.002	5	1,167
1	2.50	308	910	0.000	0	261
Alcatel-Lucent B13 RRH4x30-4R	272.00	173	131,630	0.009	25	147
Alcatel-Lucent B25 RRH4x30-4R	272.00	153	116,144	0.008	22	130
Raycap RxxDC-3315-PF-48	272.00	43	32,490	0.002	6	36
Alcatel-Lucent B66a RRH4x45 (AWS-3)	272.00	201	152,581	0.011	29	170
Commscope SBNHH-1D65C (96.6")	272.00	595	451,822	0.032	86	505
Flat Light Sector Frame	272.00	1,200	910,931	0.064	172	1,017
Torque Arms	270.00	500	376,255	0.027	71	424
Andrew ETW200VS12UB	260.00	33	23,748	0.002	4	28
RFS ATMA4P4DBP-VA20	260.00	48	34,327	0.002	6	40
Ericsson Radio 4478 B71	260.00	180	129,537	0.009	25	153
Radio Waves G3-2.4	260.00	25	17,991	0.001	3	21
RFS APX16DWV-16DWV-S-E-ACU	260.00	119	85,494	0.006	16	101
Round Sector Frame	260.00	900	647,684	0.046	123	763
RFS APXVAA24_43-U-A20	260.00	304	218,917	0.015	41	258
RAC 8' Ice Shield	239.00	600	390,841	0.028	74	509
Motorola PTP 45600	230.00	12	7,532	0.001	1	10
Radio Waves HPD6-4.7NS	230.00	405	252,105	0.018	48	343
Torque Arms	215.00	500	287,372	0.020	54	424
KMW HB-X-WM-17-65-00T-TTLNA	206.00	48	26,063	0.002	5	40
KMW HB-X-WM-17-65-00T	206.00	90	49,175	0.003	9	76
Stand-Off	206.00	300	163,917	0.012	31	254
10' Omni	190.00	25	12,414	0.001	2	21
Stand-Off	190.00	100	49,655	0.004	9	85
Raycap RUSDC-6267-PF-48	188.00	16	7,748	0.001	1	13
Ericsson RRUS-11 (50 lbs.)	188.00	150	73,556	0.005	14	127
KMW AM-X-CD-17-65-00T-RET	188.00	185	90,620	0.006	17	157
Round Sector Frame	188.00	900	441,333	0.031	84	763
10' Omni	170.00	25	10,883	0.001	2	21
Stand-Off	170.00	100	43,532	0.003	8	85
Stand-Off	168.00	100	42,927	0.003	8	85

Reviewed for Code Compliance
Inspections Division
Approved with Conditions
Date: 11/27/17

Equivalent Lateral Force Method

TX RX Systems 421-83A-01261	168.00	20	8,585	0.001	2	17
Bird BA40-41-DIN	168.00	32	13,737	0.001	3	27
6' Ice Shield	153.00	450	172,938	0.012	33	381
Motorola PTP 45600	142.00	12	4,257	0.000	1	10
Radio Waves HPD4-4.7	142.00	85	29,906	0.002	6	72
Stand-Off	125.00	100	30,257	0.002	6	85
Bird BA40-41-DIN	125.00	32	9,682	0.001	2	27
2' Omni	124.00	10	2,997	0.000	1	8
Stand-Off	124.00	100	29,971	0.002	6	85
2' Omni	99.00	5	1,148	0.000	0	4
Stand-Off	99.00	100	22,962	0.002	4	85
2" X 8" GPS	38.00	10	740	0.000	0	8
Stand-Off	38.00	100	7,396	0.001	1	85
		35,252	14,136,006	1.000	2,675	29,885

Reviewed for Code Compliance
Inspections Division
Approved with Conditions
Date: 11/27/17

Equivalent Modal Analysis Method

(Based on ASCE7-10 Chapters 11, 12 & 15 and ANSI/TIA-G, section 2.7)

Spectral Response Acceleration for Short Period (S_s):	0.25
Spectral Response Acceleration at 1.0 Second Period (S_1):	0.08
Importance Factor (I_e):	1.00
Site Coefficient (F_a):	1.60
Site Coefficient (F_v):	2.40
Response Modification Coefficient (R):	2.50
Design Spectral Response Acceleration at Short Period (S_{ds}):	0.26
Desing Spectral Response Acceleration at 1.0 Second Period (S_{d1}):	0.13
Period Based on Rayleigh Method (sec):	0.87
Redundancy Factor (p):	1.30

LoadCase (1.2 + 0.2Sds) * DL + E Seismic

Section	Height Above Base (ft)	Weight (lb)	a	b	c	S_{az}	Horizontal Force (lb)	Vertical Force (lb)
27	272.50	246	1.856	1.804	1.076	0.529	68	308
26	269.42	107	1.814	1.603	1.002	0.495	28	134
25	268.25	83	1.798	1.531	0.974	0.482	21	104
24	267.08	107	1.783	1.461	0.948	0.470	26	134
23	265.75	95	1.765	1.384	0.918	0.456	22	119
22	255.00	1,323	1.625	0.858	0.705	0.354	243	1,656
21	235.00	1,384	1.380	0.247	0.412	0.208	150	1,733
20	222.50	409	1.237	0.043	0.283	0.145	31	512
19	219.25	124	1.201	0.006	0.256	0.132	9	156
18	217.33	179	1.180	-0.013	0.240	0.125	12	225
17	215.58	130	1.162	-0.029	0.227	0.119	8	163
16	214.42	129	1.149	-0.038	0.219	0.115	8	162
15	213.25	130	1.137	-0.047	0.210	0.111	8	163
14	212.08	113	1.124	-0.055	0.202	0.108	6	142
13	206.50	810	1.066	-0.087	0.166	0.093	39	1,015
12	200.75	141	1.007	-0.108	0.135	0.081	6	176
11	190.00	1,831	0.902	-0.122	0.088	0.066	63	2,293
10	170.00	2,118	0.722	-0.093	0.034	0.059	64	2,652
9	150.00	2,113	0.562	-0.039	0.011	0.063	69	2,646
8	130.00	2,134	0.422	0.011	0.006	0.066	73	2,672
7	110.00	2,162	0.302	0.045	0.012	0.064	72	2,708
6	90.00	2,149	0.202	0.062	0.023	0.057	63	2,691
5	70.00	2,149	0.122	0.070	0.034	0.048	54	2,692
4	50.00	2,165	0.062	0.072	0.041	0.040	45	2,711
3	30.00	2,150	0.022	0.065	0.039	0.032	36	2,693
2	12.50	1,376	0.004	0.041	0.023	0.019	14	1,724
1	2.50	308	0.000	0.010	0.006	0.005	1	385
Alcatel-Lucent B13 RRH4x30-4R	272.00	173	1.849	1.771	1.064	0.523	47	217
Alcatel-Lucent B25 RRH4x30-4R	272.00	153	1.849	1.771	1.064	0.523	42	192
Raycap RxxDC-3315-PF-48	272.00	43	1.849	1.771	1.064	0.523	12	54
Alcatel-Lucent B66a RRH4x45	272.00	201	1.849	1.771	1.064	0.523	55	252
Commscope SBNHH-1D65C	272.00	595	1.849	1.771	1.064	0.523	162	745
Flat Light Sector Frame	272.00	1,200	1.849	1.771	1.064	0.523	326	1,503
Torque Arms	270.00	500	1.822	1.640	1.015	0.501	130	626
Andrew ETW200VS12UB	260.00	33	1.689	1.083	0.798	0.399	7	41
RFS ATMA4P4DBP-VA20	260.00	48	1.689	1.083	0.798	0.399	10	60
Ericsson Radio 4478 B71	260.00	180	1.689	1.083	0.798	0.399	37	225
Radio Waves G3-2.4	260.00	25	1.689	1.083	0.798	0.399	5	31
RFS APX16DWV-16DWV-S-E-ACU	260.00	119	1.689	1.083	0.798	0.399	25	149

Reviewed for Code Compliance
Inspections Division
Approved with Conditions
Date: 11/27/17

Equivalent Modal Analysis Method

Round Sector Frame	260.00	900	1.689	1.083	0.798	0.399	187	1,127
RFS APXVAA24_43-U-A20	260.00	304	1.689	1.083	0.798	0.399	63	381
RAC 8' Ice Shield	239.00	600	1.428	0.338	0.461	0.233	73	751
Motorola PTP 45600	230.00	12	1.322	0.152	0.356	0.181	1	15
Radio Waves HPD6-4.7NS	230.00	405	1.322	0.152	0.356	0.181	38	507
Torque Arms	215.00	500	1.155	-0.033	0.223	0.117	30	626
KMW HB-X-WM-17-65-00T-TTLNA	206.00	48	1.061	-0.089	0.164	0.091	2	60
KMW HB-X-WM-17-65-00T	206.00	90	1.061	-0.089	0.164	0.091	4	113
Stand-Off	206.00	300	1.061	-0.089	0.164	0.091	14	376
10' Omni	190.00	25	0.902	-0.122	0.088	0.066	1	31
Stand-Off	190.00	100	0.902	-0.122	0.088	0.066	3	125
Raycap RUSDC-6267-PF-48	188.00	16	0.883	-0.121	0.081	0.064	1	20
Ericsson RRUS-11 (50 lbs.)	188.00	150	0.883	-0.121	0.081	0.064	5	188
KMW AM-X-CD-17-65-00T-RET	188.00	185	0.883	-0.121	0.081	0.064	6	231
Round Sector Frame	188.00	900	0.883	-0.121	0.081	0.064	30	1,127
10' Omni	170.00	25	0.722	-0.093	0.034	0.059	1	31
Stand-Off	170.00	100	0.722	-0.093	0.034	0.059	3	125
Stand-Off	168.00	100	0.705	-0.089	0.031	0.059	3	125
TX RX Systems 421-83A-01261	168.00	20	0.705	-0.089	0.031	0.059	1	25
Bird BA40-41-DIN	168.00	32	0.705	-0.089	0.031	0.059	1	40
6' Ice Shield	153.00	450	0.585	-0.047	0.013	0.062	14	564
Motorola PTP 45600	142.00	12	0.504	-0.018	0.007	0.065	0	15
Radio Waves HPD4-4.7	142.00	85	0.504	-0.018	0.007	0.065	3	106
Stand-Off	125.00	100	0.390	0.021	0.007	0.066	3	125
Bird BA40-41-DIN	125.00	32	0.390	0.021	0.007	0.066	1	40
2' Omni	124.00	10	0.384	0.023	0.007	0.066	0	13
Stand-Off	124.00	100	0.384	0.023	0.007	0.066	3	125
2' Omni	99.00	5	0.245	0.056	0.018	0.060	0	6
Stand-Off	99.00	100	0.245	0.056	0.018	0.060	3	125
2" X 8" GPS	38.00	10	0.036	0.069	0.041	0.036	0	13
Stand-Off	38.00	100	0.036	0.069	0.041	0.036	2	125
		35,252	71.363	27.941	23.999	13.285	2,593	44,145

LoadCase (0.9 - 0.2Sds) * DL + E Seismic (Reduced DL)

Section	Height Above Base (ft)	Weight (lb)	a	b	c	S_{az}	Horizontal Force (lb)	Vertical Force (lb)
27	272.50	246	1.856	1.804	1.076	0.529	68	208
26	269.42	107	1.814	1.603	1.002	0.495	28	91
25	268.25	83	1.798	1.531	0.974	0.482	21	70
24	267.08	107	1.783	1.461	0.948	0.470	26	91
23	265.75	95	1.765	1.384	0.918	0.456	22	80
22	255.00	1,323	1.625	0.858	0.705	0.354	243	1,121
21	235.00	1,384	1.380	0.247	0.412	0.208	150	1,173
20	222.50	409	1.237	0.043	0.283	0.145	31	347
19	219.25	124	1.201	0.006	0.256	0.132	9	105
18	217.33	179	1.180	-0.013	0.240	0.125	12	152
17	215.58	130	1.162	-0.029	0.227	0.119	8	110
16	214.42	129	1.149	-0.038	0.219	0.115	8	109
15	213.25	130	1.137	-0.047	0.210	0.111	8	110
14	212.08	113	1.124	-0.055	0.202	0.108	6	96
13	206.50	810	1.066	-0.087	0.166	0.093	39	687
12	200.75	141	1.007	-0.108	0.135	0.081	6	119
11	190.00	1,831	0.902	-0.122	0.088	0.066	63	1,552
10	170.00	2,118	0.722	-0.093	0.034	0.059	64	1,796
9	150.00	2,113	0.562	-0.039	0.011	0.063	69	1,791
8	130.00	2,134	0.422	0.011	0.006	0.066	73	1,809
7	110.00	2,162	0.302	0.045	0.012	0.064	72	1,833
6	90.00	2,149	0.202	0.062	0.023	0.057	63	1,822
5	70.00	2,149	0.122	0.070	0.034	0.048	54	1,822
4	50.00	2,165	0.062	0.072	0.041	0.040	45	1,835
3	30.00	2,150	0.022	0.065	0.039	0.032	36	1,823
2	12.50	1,376	0.004	0.041	0.023	0.019	14	1,167

Reviewed for Code Compliance
Inspections Division
Approved with Conditions
Date: 11/27/17

Equivalent Modal Analysis Method

1	2.50	308	0.000	0.010	0.006	0.005	1	261
Alcatel-Lucent B13 RRH4x30-4R	272.00	173	1.849	1.771	1.064	0.523	47	147
Alcatel-Lucent B25 RRH4x30-4R	272.00	153	1.849	1.771	1.064	0.523	42	130
Raycap RxxDC-3315-PF-48	272.00	43	1.849	1.771	1.064	0.523	12	36
Alcatel-Lucent B66a RRH4x45	272.00	201	1.849	1.771	1.064	0.523	55	170
Commscope SBNHH-1D65C	272.00	595	1.849	1.771	1.064	0.523	162	505
Flat Light Sector Frame	272.00	1,200	1.849	1.771	1.064	0.523	326	1,017
Torque Arms	270.00	500	1.822	1.640	1.015	0.501	130	424
Andrew ETW200VS12UB	260.00	33	1.689	1.083	0.798	0.399	7	28
RFS ATMA4P4DBP-VA20	260.00	48	1.689	1.083	0.798	0.399	10	40
Ericsson Radio 4478 B71	260.00	180	1.689	1.083	0.798	0.399	37	153
Radio Waves G3-2.4	260.00	25	1.689	1.083	0.798	0.399	5	21
RFS APX16DWV-16DWV-S-E-ACU	260.00	119	1.689	1.083	0.798	0.399	25	101
Round Sector Frame	260.00	900	1.689	1.083	0.798	0.399	187	763
RFS APXVAA24_43-U-A20	260.00	304	1.689	1.083	0.798	0.399	63	258
RAC 8' Ice Shield	239.00	600	1.428	0.338	0.461	0.233	73	509
Motorola PTP 45600	230.00	12	1.322	0.152	0.356	0.181	1	10
Radio Waves HPD6-4.7NS	230.00	405	1.322	0.152	0.356	0.181	38	343
Torque Arms	215.00	500	1.155	-0.033	0.223	0.117	30	424
KMW HB-X-WM-17-65-00T-TTLNA	206.00	48	1.061	-0.089	0.164	0.091	2	40
KMW HB-X-WM-17-65-00T	206.00	90	1.061	-0.089	0.164	0.091	4	76
Stand-Off	206.00	300	1.061	-0.089	0.164	0.091	14	254
10' Omni	190.00	25	0.902	-0.122	0.088	0.066	1	21
Stand-Off	190.00	100	0.902	-0.122	0.088	0.066	3	85
Raycap RUSDC-6267-PF-48	188.00	16	0.883	-0.121	0.081	0.064	1	13
Ericsson RRUS-11 (50 lbs.)	188.00	150	0.883	-0.121	0.081	0.064	5	127
KMW AM-X-CD-17-65-00T-RET	188.00	185	0.883	-0.121	0.081	0.064	6	157
Round Sector Frame	188.00	900	0.883	-0.121	0.081	0.064	30	763
10' Omni	170.00	25	0.722	-0.093	0.034	0.059	1	21
Stand-Off	170.00	100	0.722	-0.093	0.034	0.059	3	85
Stand-Off	168.00	100	0.705	-0.089	0.031	0.059	3	85
TX RX Systems 421-83A-01261	168.00	20	0.705	-0.089	0.031	0.059	1	17
Bird BA40-41-DIN	168.00	32	0.705	-0.089	0.031	0.059	1	27
6' Ice Shield	153.00	450	0.585	-0.047	0.013	0.062	14	381
Motorola PTP 45600	142.00	12	0.504	-0.018	0.007	0.065	0	10
Radio Waves HPD4-4.7	142.00	85	0.504	-0.018	0.007	0.065	3	72
Stand-Off	125.00	100	0.390	0.021	0.007	0.066	3	85
Bird BA40-41-DIN	125.00	32	0.390	0.021	0.007	0.066	1	27
2' Omni	124.00	10	0.384	0.023	0.007	0.066	0	8
Stand-Off	124.00	100	0.384	0.023	0.007	0.066	3	85
2' Omni	99.00	5	0.245	0.056	0.018	0.060	0	4
Stand-Off	99.00	100	0.245	0.056	0.018	0.060	3	85
2" X 8" GPS	38.00	10	0.036	0.069	0.041	0.036	0	8
Stand-Off	38.00	100	0.036	0.069	0.041	0.036	2	85
		35,252	71.363	27.941	23.999	13.285	2,593	29,885

Reviewed for Code Compliance
Inspections Division
Approved with Conditions
Date: 11/27/17

Force/Stress Summary

Section 1 PIROD42B Bot Elev (ft) 0.0 Height (ft) 15.000

Max Compression Member	Pu (kip)	Load Case	Len (ft)	Bracing % X	Y	Z	KL/R	F'y (ksi)	Phic PnNum (kip)	Bolts	Num Holes	Shear phiRnv (kip)	Bear phiRn (kip)	Use %	Controls
LEG SOL - 2 1/4" SOLID	-130.31	1.2D + 1.0Di +	1.80	100	100	100	38.3	50.0	160.68	0	0	0.00	0.00	81	Member X
HORIZ	0.00		0.000	0	0	0	0.0	0.0	0.00	0	0	0.00	0.00	0	
DIAG SOL - 3/4" SOLID	-5.74	1.2D + 1.0Di +	2.440	50	50	50	70.3	50.0	13.86	0	0	0.00	0.00	41	Member X

Max Tension Member	Pu (kip)	Load Case	Fy (ksi)	Fu (ksi)	Phit PnNum (kip)	Bolts	Num Holes	Shear phiRnv (kip)	Bear phiRn (kip)	Blk Shear phit Pn (kip)	Use %	Controls
LEG	0.00		0	0	0.00	0	0	0.00	0.00		0	
HORIZ SOL - 3/4" SOLID	17.39	1.2D + 1.0Di +	50	65	19.88	0	0	0.00	0.00	0.00	87	Member
DIAG SOL - 3/4" SOLID	2.76	1.2D + 1.0Di +	50	65	19.88	0	0	0.00	0.00	0.00	13	Member

Max Splice Forces	Pu (kip)	Load Case	phiRnt (kip)	Use %	Num Bolts	Bolt Type
Top Tension	0.00		0.00	0	0	
Top Compression	114.79	1.2D + 1.0Di +	0.00	0		
Bot Tension	0.00		0.00	0		
Bot Compression	0.00		0.00	0		

Section 2 PIROD42 Bot Elev (ft) 0.0 Height (ft) 15.000

Max Compression Member	Pu (kip)	Load Case	Len (ft)	Bracing % X	Y	Z	KL/R	F'y (ksi)	Phic PnNum (kip)	Bolts	Num Holes	Shear phiRnv (kip)	Bear phiRn (kip)	Use %	Controls
LEG SOL - 2 1/4" SOLID	-118.81	1.2D + 1.0Di +	2.39	100	100	100	51.0	50.0	147.98	0	0	0.00	0.00	80	Member X
HORIZ	0.00		0.000	0	0	0	0.0	0.0	0.00	0	0	0.00	0.00	0	
DIAG SOL - 3/4" SOLID	-0.76	1.2D + 1.0Di +	4.238	50	50	50	122.0	50.0	6.70	0	0	0.00	0.00	11	Member X

Max Tension Member	Pu (kip)	Load Case	Fy (ksi)	Fu (ksi)	Phit PnNum (kip)	Bolts	Num Holes	Shear phiRnv (kip)	Bear phiRn (kip)	Blk Shear phit Pn (kip)	Use %	Controls
LEG	0.00		0	0	0.00	0	0	0.00	0.00		0	
HORIZ SOL - 3/4" SOLID	7.70	1.2D + 1.0Di +	50	65	19.88	0	0	0.00	0.00	0.00	38	Member
DIAG SOL - 3/4" SOLID	0.61	1.2D + 1.0Di +	50	65	19.88	0	0	0.00	0.00	0.00	3	Member

Max Splice Forces	Pu (kip)	Load Case	phiRnt (kip)	Use %	Num Bolts	Bolt Type
Top Tension	0.00		0.00	0	0	
Top Compression	117.42	1.2D + 1.0Di +	178.90	66		
Bot Tension	0.00		0.00	0		
Bot Compression	114.79	1.2D + 1.0Di +	0.00	0		

Reviewed for Code Compliance
Inspections Division
Approved with Conditions
Date: 11/27/17

Force/Stress Summary

Section: 3 1 Bot Elev (ft): 40.00 Height (ft): 20.000

Max Compression Member	Pu (kip)	Load Case	Len (ft)	Bracing % X	Bracing % Y	Bracing % Z	KL/R	F'y (ksi)	Phic Pn (kip)	Num Bolts	Num Holes	Shear phiRnv (kip)	Bear phiRn (kip)	Use %	Controls
LEG SOL - 2 1/4" SOLID	-116.74	1.2D + 1.0Di +	2.33	100	100	100	49.8	50.0	149.28	0	0	0.00	0.00	78	Member X
HORIZ SOL - 3/4" SOLID	-0.16	1.2D + 1.6W	3.500	95	95	95	138.3	50.0	5.22	0	0	0.00	0.00	3	Member X
DIAG SOL - 3/4" SOLID	-1.59	1.2D + 1.6W 90	4.206	50	50	50	121.1	50.0	6.80	0	0	0.00	0.00	23	Member X

Max Tension Member	Pu (kip)	Load Case	Fy (ksi)	Fu (ksi)	Phit Pn (kip)	Num Bolts	Num Holes	Shear phiRnv (kip)	Bear phiRn (kip)	Blk Shear phit Pn (kip)	Use %	Controls
LEG	0.00		0	0	0.00	0	0	0.00	0.00		0	
HORIZ SOL - 3/4" SOLID	0.66	1.2D + 1.6W	50	65	19.88	0	0	0.00	0.00	0.00	3	Member
DIAG SOL - 3/4" SOLID	0.87	1.2D + 1.6W 90	50	65	19.88	0	0	0.00	0.00	0.00	4	Member

Max Splice Forces	Pu (kip)	Load Case	phiRnt (kip)	Use %	Num Bolts	Bolt Type
Top Tension	0.00		0.00	0	0	
Top Compression	114.15	1.2D + 1.0Di +	178.90	64		
Bot Tension	0.00		0.00	0		
Bot Compression	117.42	1.2D + 1.0Di +	0.00	0		

Section: 4 1 Bot Elev (ft): 40.00 Height (ft): 20.000

Max Compression Member	Pu (kip)	Load Case	Len (ft)	Bracing % X	Bracing % Y	Bracing % Z	KL/R	F'y (ksi)	Phic Pn (kip)	Num Bolts	Num Holes	Shear phiRnv (kip)	Bear phiRn (kip)	Use %	Controls
LEG SOL - 2 1/4" SOLID	-114.27	1.2D + 1.0Di +	2.33	100	100	100	49.8	50.0	149.28	0	0	0.00	0.00	76	Member X
HORIZ SOL - 3/4" SOLID	-0.36	1.2D + 1.6W 60	3.500	95	95	95	138.3	50.0	5.22	0	0	0.00	0.00	6	Member X
DIAG SOL - 3/4" SOLID	-2.29	1.2D + 1.6W 90	4.206	50	50	50	121.1	50.0	6.80	0	0	0.00	0.00	33	Member X

Max Tension Member	Pu (kip)	Load Case	Fy (ksi)	Fu (ksi)	Phit Pn (kip)	Num Bolts	Num Holes	Shear phiRnv (kip)	Bear phiRn (kip)	Blk Shear phit Pn (kip)	Use %	Controls
LEG	0.00		0	0	0.00	0	0	0.00	0.00		0	
HORIZ SOL - 3/4" SOLID	1.14	1.2D + 1.6W	50	65	19.88	0	0	0.00	0.00	0.00	5	Member
DIAG SOL - 3/4" SOLID	1.42	1.2D + 1.6W	50	65	19.88	0	0	0.00	0.00	0.00	7	Member

Max Splice Forces	Pu (kip)	Load Case	phiRnt (kip)	Use %	Num Bolts	Bolt Type
Top Tension	0.00		0.00	0	0	
Top Compression	109.19	1.2D + 1.0Di +	178.90	61		
Bot Tension	0.00		0.00	0		
Bot Compression	114.15	1.2D + 1.0Di +	0.00	0		

Reviewed for Code Compliance
Inspections Division
Approved with Conditions
Date: 11/27/17

Force/Stress Summary

Section 5 1 Bot Elev (ft): 60.00 Height (ft): 20.000

Max Compression Member	Pu (kip)	Load Case	Len (ft)	Bracing % X	Y	Z	KL/R	F'y (ksi)	Phic Pn (kip)	Num Bolts	Num Holes	Shear phiRnv (kip)	Bear phiRn (kip)	Use %	Controls
LEG SOL - 2 1/4" SOLID	-107.38	1.2D + 1.0Di +	2.33	100	100	100	49.8	50.0	149.28	0	0	0.00	0.00	71	Member X
HORIZ SOL - 3/4" SOLID	-0.32	1.2D + 1.6W	3.500	95	95	95	138.3	50.0	5.22	0	0	0.00	0.00	6	Member X
DIAG SOL - 3/4" SOLID	-2.00	1.2D + 1.6W 90	4.206	50	50	50	121.1	50.0	6.80	0	0	0.00	0.00	29	Member X

Max Tension Member	Pu (kip)	Load Case	Fy (ksi)	Fu (ksi)	Phit Pn (kip)	Num Bolts	Num Holes	Shear phiRnv (kip)	Bear phiRn (kip)	Blk Shear phit Pn (kip)	Use %	Controls
LEG	0.00		0	0	0.00	0	0	0.00	0.00		0	
HORIZ SOL - 3/4" SOLID	0.90	1.2D + 1.6W 60	50	65	19.88	0	0	0.00	0.00	0.00	4	Member
DIAG SOL - 3/4" SOLID	1.25	1.2D + 1.6W 90	50	65	19.88	0	0	0.00	0.00	0.00	6	Member

Max Splice Forces	Pu (kip)	Load Case	phiRnt (kip)	Use %	Num Bolts	Bolt Type
Top Tension	0.00		0.00	0	0	
Top Compression	102.97	1.2D + 1.0Di +	178.90	58		
Bot Tension	0.00		0.00	0		
Bot Compression	109.19	1.2D + 1.0Di +	0.00	0		

Section 6 1 Bot Elev (ft): 40.00 Height (ft): 20.000

Max Compression Member	Pu (kip)	Load Case	Len (ft)	Bracing % X	Y	Z	KL/R	F'y (ksi)	Phic Pn (kip)	Num Bolts	Num Holes	Shear phiRnv (kip)	Bear phiRn (kip)	Use %	Controls
LEG SOL - 2 1/4" SOLID	-101.62	1.2D + 1.0Di +	2.33	100	100	100	49.8	50.0	149.28	0	0	0.00	0.00	68	Member X
HORIZ SOL - 3/4" SOLID	-0.02	1.2D + 1.6W	3.500	95	95	95	138.3	50.0	5.22	0	0	0.00	0.00	0	Member X
DIAG SOL - 3/4" SOLID	-1.25	1.2D + 1.6W 90	4.206	50	50	50	121.1	50.0	6.80	0	0	0.00	0.00	18	Member X

Max Tension Member	Pu (kip)	Load Case	Fy (ksi)	Fu (ksi)	Phit Pn (kip)	Num Bolts	Num Holes	Shear phiRnv (kip)	Bear phiRn (kip)	Blk Shear phit Pn (kip)	Use %	Controls
LEG	0.00		0	0	0.00	0	0	0.00	0.00		0	
HORIZ SOL - 3/4" SOLID	0.74	1.2D + 1.6W 60	50	65	19.88	0	0	0.00	0.00	0.00	3	Member
DIAG SOL - 3/4" SOLID	0.70	1.2D + 1.6W 60	50	65	19.88	0	0	0.00	0.00	0.00	3	Member

Max Splice Forces	Pu (kip)	Load Case	phiRnt (kip)	Use %	Num Bolts	Bolt Type
Top Tension	0.00		0.00	0	0	
Top Compression	99.55	1.2D + 1.0Di +	178.90	56		
Bot Tension	0.00		0.00	0		
Bot Compression	102.97	1.2D + 1.0Di +	0.00	0		

Reviewed for Code Compliance
Inspections Division
Approved with Conditions
Date: 11/27/17

Force/Stress Summary

Section: 7 1 Bot Elev (ft): 100.0 Height (ft): 20.000

Max Compression Member	Pu (kip)	Load Case	Len (ft)	Bracing % X	Bracing % Y	Bracing % Z	KL/R	F'y (ksi)	Phic PnNum (kip)	Bolts	Num Holes	Shear phiRnv (kip)	Bear phiRn (kip)	Use %	Controls
LEG SOL - 2 1/4" SOLID	-98.78	1.2D + 1.0Di +	2.33	100	100	100	49.8	50.0	149.28	0	0	0.00	0.00	66	Member X
HORIZ SOL - 3/4" SOLID	-0.69	1.2D + 1.6W 60	3.500	95	95	95	138.3	50.0	5.22	0	0	0.00	0.00	13	Member X
DIAG SOL - 3/4" SOLID	-3.11	1.2D + 1.6W 90	4.206	50	50	50	121.1	50.0	6.80	0	0	0.00	0.00	45	Member X

Max Tension Member	Pu (kip)	Load Case	Fy (ksi)	Fu (ksi)	Phit PnNum (kip)	Bolts	Num Holes	Shear phiRnv (kip)	Bear phiRn (kip)	Blk Shear phit Pn (kip)	Use %	Controls
LEG	0.00		0	0	0.00	0	0	0.00	0.00		0	
HORIZ SOL - 3/4" SOLID	1.42	1.2D + 1.6W	50	65	19.88	0	0	0.00	0.00	0.00	7	Member
DIAG SOL - 3/4" SOLID	2.41	1.2D + 1.6W 90	50	65	19.88	0	0	0.00	0.00	0.00	12	Member

Max Splice Forces	Pu (kip)	Load Case	phiRnt (kip)	Use %	Num Bolts	Bolt Type
Top Tension	0.00		0.00	0	0	
Top Compression	90.74	1.2D + 1.0Di +	178.90	51		
Bot Tension	0.00		0.00	0		
Bot Compression	99.55	1.2D + 1.0Di +	0.00	0		

Section: 8 1 Bot Elev (ft): 20.0 Height (ft): 20.000

Max Compression Member	Pu (kip)	Load Case	Len (ft)	Bracing % X	Bracing % Y	Bracing % Z	KL/R	F'y (ksi)	Phic PnNum (kip)	Bolts	Num Holes	Shear phiRnv (kip)	Bear phiRn (kip)	Use %	Controls
LEG SOL - 2 1/4" SOLID	-89.83	1.2D + 1.0Di +	2.33	100	100	100	49.8	50.0	149.28	0	0	0.00	0.00	60	Member X
HORIZ SOL - 3/4" SOLID	-0.69	1.2D + 1.6W	3.500	95	95	95	138.3	50.0	5.22	0	0	0.00	0.00	13	Member X
DIAG SOL - 3/4" SOLID	-2.77	1.2D + 1.6W 90	4.206	50	50	50	121.1	50.0	6.80	0	0	0.00	0.00	40	Member X

Max Tension Member	Pu (kip)	Load Case	Fy (ksi)	Fu (ksi)	Phit PnNum (kip)	Bolts	Num Holes	Shear phiRnv (kip)	Bear phiRn (kip)	Blk Shear phit Pn (kip)	Use %	Controls
LEG	0.00		0	0	0.00	0	0	0.00	0.00		0	
HORIZ SOL - 3/4" SOLID	1.18	1.2D + 1.6W 60	50	65	19.88	0	0	0.00	0.00	0.00	5	Member
DIAG SOL - 3/4" SOLID	2.13	1.2D + 1.6W 90	50	65	19.88	0	0	0.00	0.00	0.00	10	Member

Max Splice Forces	Pu (kip)	Load Case	phiRnt (kip)	Use %	Num Bolts	Bolt Type
Top Tension	0.00		0.00	0	0	
Top Compression	88.64	1.2D + 1.0Di +	178.90	50		
Bot Tension	0.00		0.00	0		
Bot Compression	90.74	1.2D + 1.0Di +	0.00	0		

Reviewed for Code Compliance
Inspections Division
Approved with Conditions
Date: 11/27/17

Force/Stress Summary

Section: 9 1 Bot Elev (ft): 40.0 Height (ft): 20.000

Max Compression Member	Pu (kip)	Load Case	Len (ft)	Bracing % X	Y	Z	KL/R	F'y (ksi)	Phic Pn (kip)	Num Bolts	Num Holes	Shear phiRnv (kip)	Bear phiRn (kip)	Use %	Controls
LEG SOL - 2 1/4" SOLID	-87.43	1.2D + 1.0Di +	2.33	100	100	100	49.8	50.0	149.28	0	0	0.00	0.00	58	Member X
HORIZ SOL - 3/4" SOLID	-0.10	1.2D + 1.6W	3.500	95	95	95	138.3	50.0	5.22	0	0	0.00	0.00	1	Member X
DIAG SOL - 3/4" SOLID	-1.51	1.2D + 1.6W 90	4.206	50	50	50	121.1	50.0	6.80	0	0	0.00	0.00	22	Member X

Max Tension Member	Pu (kip)	Load Case	Fy (ksi)	Fu (ksi)	Phit Pn (kip)	Num Bolts	Num Holes	Shear phiRnv (kip)	Bear phiRn (kip)	Blk Shear phit Pn (kip)	Use %	Controls
LEG	0.00		0	0	0.00	0	0	0.00	0.00		0	
HORIZ SOL - 3/4" SOLID	0.75	1.2D + 1.6W 60	50	65	19.88	0	0	0.00	0.00	0.00	3	Member
DIAG SOL - 3/4" SOLID	0.84	1.2D + 1.6W 60	50	65	19.88	0	0	0.00	0.00	0.00	4	Member

Max Splice Forces	Pu (kip)	Load Case	phiRnt (kip)	Use %	Num Bolts	Bolt Type
Top Tension	0.00		0.00	0	0	
Top Compression	84.14	1.2D + 1.0Di +	178.90	47		
Bot Tension	0.00		0.00	0		
Bot Compression	88.64	1.2D + 1.0Di +	0.00	0		

Section: 10 1 Bot Elev (ft): 0.0 Height (ft): 20.000

Max Compression Member	Pu (kip)	Load Case	Len (ft)	Bracing % X	Y	Z	KL/R	F'y (ksi)	Phic Pn (kip)	Num Bolts	Num Holes	Shear phiRnv (kip)	Bear phiRn (kip)	Use %	Controls
LEG SOL - 2 1/4" SOLID	-82.67	1.2D + 1.0Di +	2.33	100	100	100	49.8	50.0	149.28	0	0	0.00	0.00	55	Member X
HORIZ SOL - 3/4" SOLID	-0.41	1.2D + 1.6W 60	3.500	95	95	95	138.3	50.0	5.22	0	0	0.00	0.00	7	Member X
DIAG SOL - 3/4" SOLID	-2.05	1.2D + 1.6W	4.206	50	50	50	121.1	50.0	6.80	0	0	0.00	0.00	30	Member X

Max Tension Member	Pu (kip)	Load Case	Fy (ksi)	Fu (ksi)	Phit Pn (kip)	Num Bolts	Num Holes	Shear phiRnv (kip)	Bear phiRn (kip)	Blk Shear phit Pn (kip)	Use %	Controls
LEG	0.00		0	0	0.00	0	0	0.00	0.00		0	
HORIZ SOL - 3/4" SOLID	1.08	1.2D + 1.6W	50	65	19.88	0	0	0.00	0.00	0.00	5	Member
DIAG SOL - 3/4" SOLID	1.82	1.2D + 1.6W 60	50	65	19.88	0	0	0.00	0.00	0.00	9	Member

Max Splice Forces	Pu (kip)	Load Case	phiRnt (kip)	Use %	Num Bolts	Bolt Type
Top Tension	0.00		0.00	0	0	
Top Compression	73.70	1.2D + 1.0Di +	178.90	41		
Bot Tension	0.00		0.00	0		
Bot Compression	84.14	1.2D + 1.0Di +	0.00	0		

Reviewed for Code Compliance
Inspections Division
Approved with Conditions
Date: 11/27/17

Force/Stress Summary

Section 11 2 Bot Elev (ft) 80.0 Height (ft) 20.000

Max Compression Member	Pu (kip)	Load Case	Len (ft)	Bracing % X	Y	Z	KL/R	F'y (ksi)	Phic PnNum (kip)	Bolts	Num Holes	Shear phiRnv (kip)	Bear phiRn (kip)	Use %	Controls
LEG SOL - 2" SOLID	-73.41	1.2D + 1.0Di +	2.33	100	100	100	56.0	50.0	112.40	0	0	0.00	0.00	65	Member X
HORIZ SOL - 3/4" SOLID	-0.22	1.2D + 1.6W	3.500	96	96	96	139.8	50.0	5.11	0	0	0.00	0.00	4	Member X
DIAG SOL - 3/4" SOLID	-1.38	1.2D + 1.6W 90	4.206	50	50	50	121.1	50.0	6.80	0	0	0.00	0.00	20	Member X

Max Tension Member	Pu (kip)	Load Case	Fy (ksi)	Fu (ksi)	Phit PnNum (kip)	Bolts	Num Holes	Shear phiRnv (kip)	Bear phiRn (kip)	Blk Shear phit Pn (kip)	Use %	Controls
LEG	0.00		0	0	0.00	0	0	0.00	0.00		0	
HORIZ SOL - 3/4" SOLID	0.67	1.2D + 1.6W 60	50	65	19.88	0	0	0.00	0.00	0.00	3	Member
DIAG SOL - 3/4" SOLID	0.90	1.2D + 1.6W 90	50	65	19.88	0	0	0.00	0.00	0.00	4	Member

Max Splice Forces	Pu (kip)	Load Case	phiRnt (kip)	Use %	Num Bolts	Bolt Type
Top Tension	0.00		0.00	0	0	
Top Compression	68.81	1.2D + 1.0Di +	141.40	49		
Bot Tension	0.00		0.00	0		
Bot Compression	73.70	1.2D + 1.0Di +	0.00	0		

Section 12 2 Bot Elev (ft) 20.0 Height (ft) 11.500

Max Compression Member	Pu (kip)	Load Case	Len (ft)	Bracing % X	Y	Z	KL/R	F'y (ksi)	Phic PnNum (kip)	Bolts	Num Holes	Shear phiRnv (kip)	Bear phiRn (kip)	Use %	Controls
LEG SOL - 2" SOLID	-67.45	1.2D + 1.0Di +	0.83	100	100	100	20.0	50.0	137.30	0	0	0.00	0.00	49	Member X
HORIZ SOL - 3/4" SOLID	-1.73	1.2D + 1.6W 90	1.750	96	96	96	69.9	50.0	13.91	0	0	0.00	0.00	12	Member X
DIAG SOL - 3/4" SOLID	-1.94	1.2D + 1.6W	1.938	97	97	97	108.3	50.0	8.44	0	0	0.00	0.00	23	Member X

Max Tension Member	Pu (kip)	Load Case	Fy (ksi)	Fu (ksi)	Phit PnNum (kip)	Bolts	Num Holes	Shear phiRnv (kip)	Bear phiRn (kip)	Blk Shear phit Pn (kip)	Use %	Controls
LEG	0.00		0	0	0.00	0	0	0.00	0.00		0	
HORIZ SOL - 3/4" SOLID	1.76	1.2D + 1.6W	50	65	19.88	0	0	0.00	0.00	0.00	8	Member
DIAG SOL - 3/4" SOLID	1.81	1.2D + 1.6W	50	65	19.88	0	0	0.00	0.00	0.00	9	Member

Max Splice Forces	Pu (kip)	Load Case	phiRnt (kip)	Use %	Num Bolts	Bolt Type
Top Tension	0.00		0.00	0	0	
Top Compression	67.99	1.2D + 1.0Di +	0.00	0		
Bot Tension	0.00		0.00	0		
Bot Compression	68.81	1.2D + 1.0Di +	0.00	0		

Reviewed for Code Compliance
Inspections Division
Approved with Conditions
Date: 11/27/17

Force/Stress Summary

Section 13 2 Bot Elev (ft) 201.5 Height (ft) 10.000

Max Compression Member	Pu (kip)	Load Case	Len (ft)	Bracing % X	Y	Z	KL/R	F'y (ksi)	Phic PnNum (kip)	Bolts	Num Holes	Shear phiRnv (kip)	Bear phiRn (kip)	Use %	Controls
LEG SOL - 2" SOLID	-67.44	1.2D + 1.0Di +	2.50	100	100	100	60.0	50.0	108.65	0	0	0.00	0.00	62	Member X
HORIZ	0.00		0.000	0	0	0	0.0	0.0	0.00	0	0	0.00	0.00	0	
DIAG SOL - 3/4" SOLID	-1.72	1.2D + 1.6W 90	4.301	50	50	50	123.9	50.0	6.51	0	0	0.00	0.00	26	Member X

Max Tension Member	Pu (kip)	Load Case	Fy (ksi)	Fu (ksi)	Phit PnNum (kip)	Bolts	Num Holes	Shear phiRnv (kip)	Bear phiRn (kip)	Blk Shear phit Pn (kip)	Use %	Controls
LEG	0.00		0	0	0.00	0	0	0.00	0.00		0	
HORIZ	0.00		0	0	0.00	0	0	0.00	0.00	0.00	0	
DIAG SOL - 3/4" SOLID	1.62	1.2D + 1.6W 90	50	65	19.88	0	0	0.00	0.00	0.00	8	Member

Max Splice Forces	Pu (kip)	Load Case	phiRnt (kip)	Use %	Num Bolts	Bolt Type
Top Tension	0.00		0.00	0	0	
Top Compression	63.99	1.2D + 1.0Di +	0.00	0		
Bot Tension	0.00		0.00	0		
Bot Compression	67.99	1.2D + 1.0Di +	0.00	0		

Section 14 2 Bot Elev (ft) 201.5 Height (ft) 11.167

Max Compression Member	Pu (kip)	Load Case	Len (ft)	Bracing % X	Y	Z	KL/R	F'y (ksi)	Phic PnNum (kip)	Bolts	Num Holes	Shear phiRnv (kip)	Bear phiRn (kip)	Use %	Controls
LEG SOL - 2" SOLID	-61.46	1.2D + 1.0Di +	1.17	100	100	100	28.0	50.0	133.49	0	0	0.00	0.00	46	Member X
HORIZ SOL - 3/4" SOLID	-0.01	1.2D + 1.6W	1.750	96	96	96	69.9	50.0	13.91	0	0	0.00	0.00	0	Member X
DIAG SOL - 3/4" SOLID	-3.17	1.2D + 1.6W	2.103	97	97	97	117.5	50.0	7.23	0	0	0.00	0.00	43	Member X

Max Tension Member	Pu (kip)	Load Case	Fy (ksi)	Fu (ksi)	Phit PnNum (kip)	Bolts	Num Holes	Shear phiRnv (kip)	Bear phiRn (kip)	Blk Shear phit Pn (kip)	Use %	Controls
LEG	0.00		0	0	0.00	0	0	0.00	0.00		0	
HORIZ SOL - 3/4" SOLID	1.29	1.2D + 1.0Di +	50	65	19.88	0	0	0.00	0.00	0.00	6	Member
DIAG SOL - 3/4" SOLID	0.80	1.2D + 1.6W 330	50	65	19.88	0	0	0.00	0.00	0.00	4	Member

Max Splice Forces	Pu (kip)	Load Case	phiRnt (kip)	Use %	Num Bolts	Bolt Type
Top Tension	0.00		0.00	0	0	
Top Compression	61.46	1.2D + 1.0Di +	0.00	0		
Bot Tension	0.00		0.00	0		
Bot Compression	63.99	1.2D + 1.0Di +	0.00	0		

Site Number: 10047 | Code: ANSI/TIA-222-G | © 2007 - 2017 by AT(

Site Name: PORTLAND ME, ME | Engineering Number: OAA706994_C3_01 | 7/

Customer: T-MOBILE

Reviewed for Code Compliance
Inspections Division
Approved with Conditions
Date: 11/27/17

Force/Stress Summary

Section 15 2 — Bot Elev (ft) 22.6 — Height (ft) 166

Max Compression Member	Pu (kip)	Load Case	Len (ft)	Bracing % X	Bracing % Y	Bracing % Z	KL/R	F'y (ksi)	Phic PnNum (kip)	Bolts	Num Holes	Shear phiRnv (kip)	Bear phiRn (kip)	Use %	Controls
LEG SOL - 2" SOLID	-54.03	1.2D + 1.0Di +	1.17	100	100	100	28.0	50.0	133.50	0	0	0.00	0.00	40	Member X
HORIZ PL - PL 3 x 0.375	-7.78	1.2D + 1.6W	1.750	96	96	96	121.3	50.0	17.27	0	0	0.00	0.00	45	Member Y
DIAG SOL - 3/4" SOLID	-7.3	1.2D + 1.6W 90	2.103	97	97	97	117.5	50.0	7.23	0	0	0.00	0.00	101	Member X

Max Tension Member	Pu (kip)	Load Case	Fy (ksi)	Fu (ksi)	Phit PnNum (kip)	Bolts	Num Holes	Shear phiRnv (kip)	Bear phiRn (kip)	Blk Shear phit Pn (kip)	Use %	Controls
LEG	0.00		0	0	0.00	0	0	0.00	0.00		0	
HORIZ	0.00		0	0	0.00	0	0	0.00	0.00	0.00	0	
DIAG SOL - 3/4" SOLID	5.07	1.2D + 1.6W 90	50	65	19.88	0	0	0.00	0.00	0.00	25	Member

Max Splice Forces	Pu (kip)	Load Case	phiRnt (kip)	Use %	Num Bolts	Bolt Type
Top Tension	0.00		0.00	0	0	
Top Compression	59.63	1.2D + 1.6W 240	0.00	0		
Bot Tension	0.00		0.00	0		
Bot Compression	61.46	1.2D + 1.0Di +	0.00	0		

Section 16 2 — Bot Elev (ft) 23.8 — Height (ft) 167

Max Compression Member	Pu (kip)	Load Case	Len (ft)	Bracing % X	Bracing % Y	Bracing % Z	KL/R	F'y (ksi)	Phic PnNum (kip)	Bolts	Num Holes	Shear phiRnv (kip)	Bear phiRn (kip)	Use %	Controls
LEG SOL - 2" SOLID	-65.57	1.2D + 1.6W	1.17	100	100	100	28.0	50.0	133.49	0	0	0.00	0.00	49	Member X
HORIZ SOL - 3/4" SOLID	0.00	1.2D + 1.6W 90	1.750	96	96	96	69.9	50.0	13.91	0	0	0.00	0.00	0	Member X
DIAG SOL - 3/4" SOLID	-5.65	1.2D + 1.6W 60	2.103	97	97	97	117.5	50.0	7.23	0	0	0.00	0.00	78	Member X

Max Tension Member	Pu (kip)	Load Case	Fy (ksi)	Fu (ksi)	Phit PnNum (kip)	Bolts	Num Holes	Shear phiRnv (kip)	Bear phiRn (kip)	Blk Shear phit Pn (kip)	Use %	Controls
LEG	0.00		0	0	0.00	0	0	0.00	0.00		0	
HORIZ SOL - 3/4" SOLID	1.47	1.2D + 1.6W	50	65	19.88	0	0	0.00	0.00	0.00	7	Member
DIAG SOL - 3/4" SOLID	5.41	1.2D + 1.6W	50	65	19.88	0	0	0.00	0.00	0.00	27	Member

Max Splice Forces	Pu (kip)	Load Case	phiRnt (kip)	Use %	Num Bolts	Bolt Type
Top Tension	0.00		0.00	0	0	
Top Compression	65.57	1.2D + 1.6W 240	0.00	0		
Bot Tension	0.00		0.00	0		
Bot Compression	59.63	1.2D + 1.6W 240	0.00	0		

Reviewed for Code Compliance
Inspections Division
Approved with Conditions
Date: 11/27/17

Force/Stress Summary

Section: 17 2 Bot Elev (ft): 15.0 Height (ft): 1.167

Max Compression Member	Pu (kip)	Load Case	Len (ft)	Bracing % X	Y	Z	KL/R	F'y (ksi)	Phic Pn (kip)	Num Bolts	Num Holes	Shear phiRnv (kip)	Bear phiRn (kip)	Use %	Controls
LEG SOL - 2" SOLID	-59.43	1.2D + 1.6W	1.17	100	100	100	28.0	50.0	133.49	0	0	0.00	0.00	44	Member X
HORIZ PL - PL 3 x 0.375	-2.82	1.2D + 1.6W 60	1.750	96	96	96	121.3	50.0	17.27	0	0	0.00	0.00	16	Member Y
DIAG SOL - 3/4" SOLID	-2.05	1.2D + 1.6W 60	2.103	97	97	97	117.5	50.0	7.23	0	0	0.00	0.00	28	Member X

Max Tension Member	Pu (kip)	Load Case	Fy (ksi)	Fu (ksi)	Phit Pn (kip)	Num Bolts	Num Holes	Shear phiRnv (kip)	Bear phiRn (kip)	Blk Shear phit Pn (kip)	Use %	Controls
LEG SOL - 2" SOLID	12.25	1.2D + 1.6W 60	50	65	141.37	0	0	0.00	0.00		8	Member
HORIZ PL - PL 3 x 0.375	12.48	1.2D + 1.6W	50	65	50.63	0	0	0.00	0.00	0.00	24	Member
DIAG SOL - 3/4" SOLID	2.00	1.2D + 1.6W	50	65	19.88	0	0	0.00	0.00	0.00	10	Member

Max Splice Forces	Pu (kip)	Load Case	phiRnt (kip)	Use %	Num Bolts	Bolt Type
Top Tension	9.97	1.2D + 1.6W 300	0.00	0	0	
Top Compression	57.39	1.2D + 1.6W 240	0.00	0		
Bot Tension	0.00		0.00	0		
Bot Compression	65.57	1.2D + 1.6W 240	0.00	0		

Section: 18 2 Bot Elev (ft): 16.1 Height (ft): 2.333

Max Compression Member	Pu (kip)	Load Case	Len (ft)	Bracing % X	Y	Z	KL/R	F'y (ksi)	Phic Pn (kip)	Num Bolts	Num Holes	Shear phiRnv (kip)	Bear phiRn (kip)	Use %	Controls
LEG SOL - 2" SOLID	-52.28	1.2D + 1.6W	2.33	100	100	100	56.0	50.0	112.41	0	0	0.00	0.00	46	Member X
HORIZ	0.00		0.000	0	0	0	0.0	0.0	0.00	0	0	0.00	0.00	0	
DIAG SOL - 3/4" SOLID	-4.64	1.2D + 1.6W 90	4.206	50	50	50	121.1	50.0	6.80	0	0	0.00	0.00	68	Member X

Max Tension Member	Pu (kip)	Load Case	Fy (ksi)	Fu (ksi)	Phit Pn (kip)	Num Bolts	Num Holes	Shear phiRnv (kip)	Bear phiRn (kip)	Blk Shear phit Pn (kip)	Use %	Controls
LEG SOL - 2" SOLID	5.32	1.2D + 1.6W 60	50	65	141.37	0	0	0.00	0.00		3	Member
HORIZ	0.00		0	0	0.00	0	0	0.00	0.00	0.00	0	
DIAG SOL - 3/4" SOLID	4.24	1.2D + 1.6W 60	50	65	19.88	0	0	0.00	0.00	0.00	21	Member

Max Splice Forces	Pu (kip)	Load Case	phiRnt (kip)	Use %	Num Bolts	Bolt Type
Top Tension	1.30	1.2D + 1.6W 300	0.00	0	0	
Top Compression	48.81	1.2D + 1.6W 240	0.00	0		
Bot Tension	9.97	1.2D + 1.6W 300	0.00	0		
Bot Compression	57.39	1.2D + 1.6W 240	0.00	0		

Reviewed for Code Compliance
Inspections Division
Approved with Conditions
Date: 11/27/17

Force/Stress Summary

Section 19 2 Bot Elev (ft) 118.5 Height (ft) 1.500

Max Compression Member	Pu (kip)	Load Case	Len (ft)	Bracing % X	Bracing % Y	Bracing % Z	KL/R	F'y (ksi)	Phic PnNum (kip)	Bolts	Num Holes	Shear phiRnv (kip)	Bear phiRn (kip)	Use %	Controls
LEG SOL - 2" SOLID	-48.51	1.2D + 1.6W	0.83	100	100	100	20.0	50.0	137.30	0	0	0.00	0.00	35	Member X
HORIZ SOL - 3/4" SOLID	-1.22	1.2D + 1.6W 60	3.500	96	96	96	139.8	50.0	5.11	0	0	0.00	0.00	23	Member X
DIAG	0.00		0.000	0	0	0	0.0	0.0	0.00	0	0	0.00	0.00		

Max Tension Member	Pu (kip)	Load Case	Fy (ksi)	Fu (ksi)	Phit PnNum (kip)	Bolts	Num Holes	Shear phiRnv (kip)	Bear phiRn (kip)	Blk Shear phit Pn (kip)	Use %	Controls
LEG SOL - 2" SOLID	1.45	1.2D + 1.6W 60	50	65	141.37	0	0	0.00	0.00		1	Member
HORIZ SOL - 3/4" SOLID	1.19	1.2D + 1.6W	50	65	19.88	0	0	0.00	0.00	0.00	5	Member
DIAG SOL - 3/4" SOLID	0.01	1.2D + 1.6W	50	65	19.88	0	0	0.00	0.00	0.00	0	Member

Max Splice Forces	Pu (kip)	Load Case	phiRnt (kip)	Use %	Num Bolts	Bolt Type
Top Tension	1.45	1.2D + 1.6W 300	87.50	2	0	
Top Compression	48.68	1.2D + 1.6W 240	141.40	34		
Bot Tension	1.30	1.2D + 1.6W 300	0.00	0		
Bot Compression	48.81	1.2D + 1.6W 240	0.00	0		

Section 20 2 - 5' Bot Elev (ft) 120.0 Height (ft) 5.000

Max Compression Member	Pu (kip)	Load Case	Len (ft)	Bracing % X	Bracing % Y	Bracing % Z	KL/R	F'y (ksi)	Phic PnNum (kip)	Bolts	Num Holes	Shear phiRnv (kip)	Bear phiRn (kip)	Use %	Controls
LEG SOL - 2" SOLID	-44.83	1.2D + 1.6W	2.17	100	100	100	52.0	50.0	116.00	0	0	0.00	0.00	38	Member X
HORIZ SOL - 3/4" SOLID	-2.08	1.2D + 1.6W	3.500	96	96	96	139.8	50.0	5.11	0	0	0.00	0.00	40	Member X
DIAG SOL - 3/4" SOLID	-4.04	1.2D + 1.6W 90	4.117	50	50	50	118.5	50.0	7.10	0	0	0.00	0.00	56	Member X

Max Tension Member	Pu (kip)	Load Case	Fy (ksi)	Fu (ksi)	Phit PnNum (kip)	Bolts	Num Holes	Shear phiRnv (kip)	Bear phiRn (kip)	Blk Shear phit Pn (kip)	Use %	Controls
LEG SOL - 2" SOLID	1.46	1.2D + 1.6W 60	50	65	141.37	0	0	0.00	0.00		1	Member
HORIZ SOL - 3/4" SOLID	2.11	1.2D + 1.6W 60	50	65	19.88	0	0	0.00	0.00	0.00	10	Member
DIAG SOL - 3/4" SOLID	4.09	1.2D + 1.6W 90	50	65	19.88	0	0	0.00	0.00	0.00	20	Member

Max Splice Forces	Pu (kip)	Load Case	phiRnt (kip)	Use %	Num Bolts	Bolt Type
Top Tension	0.00		0.00	0	0	
Top Compression	38.92	1.2D + 1.0Di +	0.00	0		
Bot Tension	1.45	1.2D + 1.6W 300	0.00	0		
Bot Compression	48.68	1.2D + 1.6W 240	0.00	0		

Reviewed for Code Compliance
Inspections Division
Approved with Conditions
Date: 11/27/17

Force/Stress Summary

Section 21 3 Bot Elev (ft) 125.0 Height (ft) 20.000

Max Compression Member	Pu (kip)	Load Case	Len (ft)	Bracing % X	Y	Z	KL/R	F'y (ksi)	Phic PnNum (kip)	Bolts	Num Holes	Shear phiRnv (kip)	Bear phiRn (kip)	Use %	Controls
LEG SOL - 1 3/4" SOLID	-39.72	1.2D + 1.0Di +	2.38	100	100	100	65.1	50.0	79.36	0	0	0.00	0.00	50	Member X
HORIZ SOL - 3/4" SOLID	-0.97	1.2D + 1.6W	3.500	96	96	96	139.8	50.0	5.11	0	0	0.00	0.00	19	Member X
DIAG SOL - 3/4" SOLID	-2.92	1.2D + 1.6W 90	4.230	50	50	50	121.8	50.0	6.73	0	0	0.00	0.00	43	Member X

Max Tension Member	Pu (kip)	Load Case	Fy (ksi)	Fu (ksi)	Phit PnNum (kip)	Bolts	Num Holes	Shear phiRnv (kip)	Bear phiRn (kip)	Blk Shear phit Pn (kip)	Use %	Controls
LEG	0.00		0	0	0.00	0	0	0.00	0.00		0	
HORIZ SOL - 3/4" SOLID	1.22	1.2D + 1.6W 60	50	65	19.88	0	0	0.00	0.00	0.00	6	Member
DIAG SOL - 3/4" SOLID	2.67	1.2D + 1.6W 90	50	65	19.88	0	0	0.00	0.00	0.00	13	Member

Max Splice Forces	Pu (kip)	Load Case	phiRnt (kip)	Use %	Num Bolts	Bolt Type
Top Tension	0.00		0.00	0	0	
Top Compression	40.31	1.2D + 1.0Di +	108.20	37		
Bot Tension	0.00		0.00	0		
Bot Compression	38.92	1.2D + 1.0Di +	0.00	0		

Section 22 3 Bot Elev (ft) 105.0 Height (ft) 20.000

Max Compression Member	Pu (kip)	Load Case	Len (ft)	Bracing % X	Y	Z	KL/R	F'y (ksi)	Phic PnNum (kip)	Bolts	Num Holes	Shear phiRnv (kip)	Bear phiRn (kip)	Use %	Controls
LEG SOL - 1 3/4" SOLID	-44.49	1.2D + 1.6W 60	2.33	100	100	100	64.0	50.0	80.23	0	0	0.00	0.00	55	Member X
HORIZ SOL - 3/4" SOLID	-0.38	1.2D + 1.6W	3.500	96	96	96	139.8	50.0	5.11	0	0	0.00	0.00	7	Member X
DIAG SOL - 3/4" SOLID	-1.32	1.2D + 1.6W 90	4.206	50	50	50	121.1	50.0	6.80	0	0	0.00	0.00	19	Member X

Max Tension Member	Pu (kip)	Load Case	Fy (ksi)	Fu (ksi)	Phit PnNum (kip)	Bolts	Num Holes	Shear phiRnv (kip)	Bear phiRn (kip)	Blk Shear phit Pn (kip)	Use %	Controls
LEG	0.00		0	0	0.00	0	0	0.00	0.00		0	
HORIZ SOL - 3/4" SOLID	0.71	1.2D + 1.6W 60	50	65	19.88	0	0	0.00	0.00	0.00	3	Member
DIAG SOL - 3/4" SOLID	1.01	1.2D + 1.6W 60	50	65	19.88	0	0	0.00	0.00	0.00	5	Member

Max Splice Forces	Pu (kip)	Load Case	phiRnt (kip)	Use %	Num Bolts	Bolt Type
Top Tension	0.00		0.00	0	0	
Top Compression	40.87	1.2D + 1.6W 180	108.20	38		
Bot Tension	0.00		0.00	0		
Bot Compression	40.31	1.2D + 1.0Di +	0.00	0		

Reviewed for Code Compliance
Inspections Division
Approved with Conditions
Date: 11/27/17

Force/Stress Summary

Section 23 4 Bot Elev (ft) 205.0 Height (ft) 1.500

Max Compression Member	Pu (kip)	Load Case	Len (ft)	Bracing % X	Y	Z	KL/R	F'y (ksi)	Phic Pn (kip)	Num Bolts	Num Holes	Shear phiRnv (kip)	Bear phiRn (kip)	Use %	Controls
LEG SOL - 1 3/4" SOLID	-41.60	1.2D + 1.6W 60	0.83	100	100	100	22.9	50.0	104.18	0	0	0.00	0.00	39	Member X
HORIZ SOL - 3/4" SOLID	-3.48	1.2D + 1.0Di +	3.500	96	96	96	139.8	50.0	5.11	0	0	0.00	0.00	68	Member X
DIAG	0.00		0.000	0	0	0	0.0	0.0	0.00	0	0	0.00	0.00		

Max Tension Member	Pu (kip)	Load Case	Fy (ksi)	Fu (ksi)	Phit Pn (kip)	Num Bolts	Num Holes	Shear phiRnv (kip)	Bear phiRn (kip)	Blk Shear phit Pn (kip)	Use %	Controls
LEG	0.00		0	0	0.00	0	0	0.00	0.00		0	
HORIZ	0.00		0	0	0.00	0	0	0.00	0.00	0.00	0	
DIAG SOL - 3/4" SOLID	4.62	1.2D + 1.6W	50	65	19.88	0	0	0.00	0.00	0.00	23	Member

Max Splice Forces	Pu (kip)	Load Case	phiRnt (kip)	Use %	Num Bolts	Bolt Type
Top Tension	0.00		0.00	0	0	
Top Compression	41.61	1.2D + 1.6W 180	0.00	0		
Bot Tension	0.00		0.00	0		
Bot Compression	40.87	1.2D + 1.6W 180	0.00	0		

Section 24 4 Bot Elev (ft) 206.5 Height (ft) 1.166

Max Compression Member	Pu (kip)	Load Case	Len (ft)	Bracing % X	Y	Z	KL/R	F'y (ksi)	Phic Pn (kip)	Num Bolts	Num Holes	Shear phiRnv (kip)	Bear phiRn (kip)	Use %	Controls
LEG SOL - 1 3/4" SOLID	-31.40	1.2D + 1.6W 60	1.17	100	100	100	32.0	50.0	100.44	0	0	0.00	0.00	31	Member X
HORIZ PL - PL 3 x 0.375	-6.58	1.2D + 1.6W 90	1.750	96	96	96	121.3	50.0	17.26	0	0	0.00	0.00	38	Member Y
DIAG SOL - 3/4" SOLID	-2.94	1.2D + 1.6W 90	2.103	97	97	97	117.5	50.0	7.23	0	0	0.00	0.00	40	Member X

Max Tension Member	Pu (kip)	Load Case	Fy (ksi)	Fu (ksi)	Phit Pn (kip)	Num Bolts	Num Holes	Shear phiRnv (kip)	Bear phiRn (kip)	Blk Shear phit Pn (kip)	Use %	Controls
LEG	0.00		0	0	0.00	0	0	0.00	0.00		0	
HORIZ	0.00		0	0	0.00	0	0	0.00	0.00	0.00	0	
DIAG SOL - 3/4" SOLID	7.17	1.2D + 1.6W 90	50	65	19.88	0	0	0.00	0.00	0.00	36	Member

Max Splice Forces	Pu (kip)	Load Case	phiRnt (kip)	Use %	Num Bolts	Bolt Type
Top Tension	0.00		0.00	0	0	
Top Compression	24.72	1.2D + 1.0Di +	0.00	0		
Bot Tension	0.00		0.00	0		
Bot Compression	41.61	1.2D + 1.6W 180	0.00	0		

Reviewed for Code Compliance
Inspections Division
Approved with Conditions
Date: 11/27/17

Force/Stress Summary

Section 25 4 Bot Elev (ft) 107.6 Height (ft) 1.167

Max Compression Member	Pu (kip)	Load Case	Len (ft)	Bracing % X	Bracing % Y	Bracing % Z	KL/R	F'y (ksi)	Phic PnNum (kip)	Bolts	Num Holes	Shear phiRnv (kip)	Bear phiRn (kip)	Use %	Controls
LEG SOL - 1 3/4" SOLID	-20.24	1.2D + 1.0Di +	1.17	100	100	100	32.0	50.0	100.43	0	0	0.00	0.00	20	Member X
HORIZ	0.00		0.000	0	0	0	0.0	0.0	0.00	0	0	0.00	0.00	0	
DIAG SOL - 3/4" SOLID	-7.03	1.2D + 1.6W 90	2.103	97	97	97	117.5	50.0	7.23	0	0	0.00	0.00	97	Member X

Max Tension Member	Pu (kip)	Load Case	Fy (ksi)	Fu (ksi)	Phit PnNum (kip)	Bolts	Num Holes	Shear phiRnv (kip)	Bear phiRn (kip)	Blk Shear phit Pn (kip)	Use %	Controls
LEG	0.00		0	0	0.00	0	0	0.00	0.00		0	
HORIZ	0.00		0	0	0.00	0	0	0.00	0.00	0.00	0	
DIAG SOL - 3/4" SOLID	3.23	1.2D + 1.6W 90	50	65	19.88	0	0	0.00	0.00	0.00	16	Member

Max Splice Forces	Pu (kip)	Load Case	phiRnt (kip)	Use %	Num Bolts	Bolt Type
Top Tension	0.00		0.00	0	0	
Top Compression	20.24	1.2D + 1.0Di +	0.00	0		
Bot Tension	0.00		0.00	0		
Bot Compression	24.72	1.2D + 1.0Di +	0.00	0		

Section 26 4 Bot Elev (ft) 108.8 Height (ft) 1.167

Max Compression Member	Pu (kip)	Load Case	Len (ft)	Bracing % X	Bracing % Y	Bracing % Z	KL/R	F'y (ksi)	Phic PnNum (kip)	Bolts	Num Holes	Shear phiRnv (kip)	Bear phiRn (kip)	Use %	Controls
LEG SOL - 1 3/4" SOLID	-4.70	1.2D + 1.6W	1.17	100	100	100	32.0	50.0	100.43	0	0	0.00	0.00	4	Member X
HORIZ PL - PL 3 x 0.375	-1.66	1.2D + 1.6W 60	1.750	96	96	96	121.3	50.0	17.27	0	0	0.00	0.00	9	Member Y
DIAG SOL - 3/4" SOLID	-3.79	1.2D + 1.6W 90	2.103	97	97	97	117.5	50.0	7.23	0	0	0.00	0.00	52	Member X

Max Tension Member	Pu (kip)	Load Case	Fy (ksi)	Fu (ksi)	Phit PnNum (kip)	Bolts	Num Holes	Shear phiRnv (kip)	Bear phiRn (kip)	Blk Shear phit Pn (kip)	Use %	Controls
LEG SOL - 1 3/4" SOLID	6.07	1.2D + 1.6W 60	50	65	108.24	0	0	0.00	0.00		5	Member
HORIZ PL - PL 3 x 0.375	11.77	1.2D + 1.6W	50	65	50.63	0	0	0.00	0.00	0.00	23	Member
DIAG SOL - 3/4" SOLID	0.02	1.2D + 1.6W 90	50	65	19.88	0	0	0.00	0.00	0.00	0	Member

Max Splice Forces	Pu (kip)	Load Case	phiRnt (kip)	Use %	Num Bolts	Bolt Type
Top Tension	2.24	1.2D + 1.6W 60	0.00	0	0	
Top Compression	4.83	1.2D + 1.6W	0.00	0		
Bot Tension	0.00		0.00	0		
Bot Compression	20.24	1.2D + 1.0Di +	0.00	0		

Reviewed for Code Compliance
Inspections Division
Approved with Conditions
Date: 11/27/17

Force/Stress Summary

Section 27 Top Bot Elev (ft) 170.0 Height (ft) 5.000

Max Compression Member	Pu (kip)	Load Case	Len (ft)	Bracing % X	Bracing % Y	Bracing % Z	KL/R	F'y (ksi)	Phic Pn (kip)	Num Bolts	Num Holes	Shear phiRnv (kip)	Bear phiRn (kip)	Use %	Controls
LEG SOL - 1 3/4" SOLID	-5.77	1.2D + 1.0Di +	2.17	100	100	100	59.4	50.0	83.61	0	0	0.00	0.00	6	Member X
HORIZ	0.00		0.000	0	0	0	0.0	0.0	0.00	0	0	0.00	0.00	0	
DIAG SOL - 3/4" SOLID	-2.05	1.2D + 1.6W 90	4.116	50	50	50	118.5	50.0	7.10	0	0	0.00	0.00	28	Member X

Max Tension Member	Pu (kip)	Load Case	Fy (ksi)	Fu (ksi)	Phit Pn (kip)	Num Bolts	Num Holes	Shear phiRnv (kip)	Bear phiRn (kip)	Blk Shear phit Pn (kip)	Use %	Controls
LEG SOL - 1 3/4" SOLID	1.79	1.2D + 1.6W	50	65	108.24	0	0	0.00	0.00		1	Member
HORIZ SOL - 3/4" SOLID	1.61	1.2D + 1.6W 90	50	65	19.88	0	0	0.00	0.00	0.00	8	Member
DIAG SOL - 3/4" SOLID	3.50	1.2D + 1.6W 90	50	65	19.88	0	0	0.00	0.00	0.00	17	Member

Max Splice Forces	Pu (kip)	Load Case	phiRnt (kip)	Use %	Num Bolts	Bolt Type
Top Tension	0.00		0.00	0	0	
Top Compression	0.36	(1.2 + 0.2Sds) *	0.00	0		
Bot Tension	2.24	1.2D + 1.6W 60	0.00	0		
Bot Compression	4.83	1.2D + 1.6W	0.00	0		

Maximum Reactions Summary

	Base	Anch1
Vertical (kip)	355.75	-100.30
Horizontal (kip)	0.63	65.76

Reviewed for Code Compliance
Inspections Division
Approved with Conditions
Date: 11/27/17

Force/Stress Summary

Guy Anchor Design Loads

Radius (ft)	Drop (ft)	Azimuth (°)	Uplift (kip)	Shear (kip)
115.00	0.00	0	100.30	65.75
115.00	0.00	240	100.26	65.76
115.00	0.00	120	100.30	65.75

Maximum Cable Forces Summary

Load Case	Elevation (ft)	Cable	Anchor Node	Tower Node	Allow Tension (kip)	Applied Tension (kip)	Use %
1.2D + 1.6W 90 deg	54.66	9/16 EHS	A1a	29b	21.00	9.77	47
1.2D + 1.6W 90 deg	110.00	5/8 EHS	A1a	57b	25.44	15.49	61
1.2D + 1.6W 90 deg	165.33	11/16 EHS	A1a	85b	30.00	18.70	62
1.2D + 1.6W 90 deg	213.83	5/8 EHS	A1a	T4a	25.44	13.63	54
1.2D + 1.6W 60 deg	215.00	5/8 EHS	A1a	111b	25.44	13.37	53
1.2D + 1.6W 90 deg	267.66	5/8 EHS	A1a	T6a	25.44	12.56	49
1.2D + 1.6W 60 deg	268.83	11/16 EHS	A1a	143b	30.00	14.92	50

Reviewed for Code Compliance
Inspections Division
Approved with Conditions
Date: 11/27/17

Deflections and Rotations

Load Case	Elevation (ft)	Deflection (ft)	Twist (deg)	Sway (deg)	Resultant (deg)
98 mph Normal to Face with No Ice	37.00	0.208	0.0049	0.3448	0.3448
98 mph Normal to Face with No Ice	99.33	0.673	0.0031	0.4245	0.4245
98 mph Normal to Face with No Ice	123.00	0.905	0.0029	0.5410	0.5410
98 mph Normal to Face with No Ice	125.33	0.929	0.0028	0.6283	0.6283
98 mph Normal to Face with No Ice	143.00	1.108	0.0028	0.5285	0.5285
98 mph Normal to Face with No Ice	152.33	1.193	0.0026	0.5033	0.5033
98 mph Normal to Face with No Ice	167.67	1.318	0.0021	0.5302	0.5302
98 mph Normal to Face with No Ice	170.00	1.338	0.0022	0.5004	0.5004
98 mph Normal to Face with No Ice	187.67	1.487	0.0022	0.4241	0.4241
98 mph Normal to Face with No Ice	190.00	1.504	0.0021	0.4365	0.4365
98 mph Normal to Face with No Ice	206.50	1.608	0.0014	0.3552	0.3552
98 mph Normal to Face with No Ice	215.00	1.659	0.0012	0.4249	0.4249
98 mph Normal to Face with No Ice	230.08	1.813	0.0021	0.4948	0.4948
98 mph Normal to Face with No Ice	239.58	1.890	0.0021	0.4656	0.4656
98 mph Normal to Face with No Ice	259.67	2.030	0.0029	0.2706	0.2706
98 mph Normal to Face with No Ice	270.00	2.066	0.0026	0.2834	0.2834
98 mph Normal to Face with No Ice	272.17	2.074	0.0023	0.2535	0.2535
98 mph 60 degree with No Ice	37.00	0.124	0.0610	0.1975	0.2040
98 mph 60 degree with No Ice	99.33	0.379	0.1364	0.1765	0.2169
98 mph 60 degree with No Ice	123.00	0.511	0.1656	0.3164	0.3568
98 mph 60 degree with No Ice	125.33	0.525	0.1683	0.3573	0.3905
98 mph 60 degree with No Ice	143.00	0.630	0.1815	0.3001	0.3507
98 mph 60 degree with No Ice	152.33	0.678	0.1885	0.2823	0.3347
98 mph 60 degree with No Ice	167.67	0.745	0.1996	0.2844	0.3423
98 mph 60 degree with No Ice	170.00	0.757	0.2003	0.2898	0.3523
98 mph 60 degree with No Ice	187.67	0.847	0.2016	0.2544	0.3243
98 mph 60 degree with No Ice	190.00	0.856	0.2017	0.2293	0.3024
98 mph 60 degree with No Ice	206.50	0.913	0.1981	0.2000	0.2797
98 mph 60 degree with No Ice	215.00	0.940	0.1967	0.2546	0.3137
98 mph 60 degree with No Ice	230.08	1.056	0.1969	0.3588	0.4019
98 mph 60 degree with No Ice	239.58	1.111	0.1960	0.3311	0.3848
98 mph 60 degree with No Ice	259.67	1.205	0.1951	0.1444	0.2427
98 mph 60 degree with No Ice	270.00	1.218	0.1945	0.1446	0.2423
98 mph 60 degree with No Ice	272.17	1.222	0.1943	0.1296	0.2204
98 mph 90 degree with No Ice	37.00	0.182	0.0249	0.3017	0.3023
98 mph 90 degree with No Ice	99.33	0.589	-0.0268	0.3660	0.3670
98 mph 90 degree with No Ice	123.00	0.791	-0.0415	0.4811	0.4829
98 mph 90 degree with No Ice	125.33	0.811	-0.0428	0.5049	0.5059
98 mph 90 degree with No Ice	143.00	0.966	-0.0493	0.4524	0.4543
98 mph 90 degree with No Ice	152.33	1.038	-0.0526	0.4289	0.4310
98 mph 90 degree with No Ice	167.67	1.143	-0.0580	0.3985	0.4005
98 mph 90 degree with No Ice	170.00	1.160	-0.0584	0.4131	0.4172
98 mph 90 degree with No Ice	187.67	1.286	-0.0597	0.3650	0.3699
98 mph 90 degree with No Ice	190.00	1.300	-0.0598	0.3243	0.3269
98 mph 90 degree with No Ice	206.50	1.385	-0.0582	0.2909	0.2966
98 mph 90 degree with No Ice	215.00	1.426	-0.0578	0.3480	0.3502
98 mph 90 degree with No Ice	230.08	1.562	-0.0592	0.4298	0.4324
98 mph 90 degree with No Ice	239.58	1.628	-0.0589	0.4011	0.4029
98 mph 90 degree with No Ice	259.67	1.745	-0.0589	0.2139	0.2219
98 mph 90 degree with No Ice	270.00	1.771	-0.0586	0.2249	0.2324
98 mph 90 degree with No Ice	272.17	1.777	-0.0582	0.1987	0.2041
98 mph 120 degree with No Ice	37.00	0.209	-0.0919	0.3463	0.3583
98 mph 120 degree with No Ice	99.33	0.676	-0.2214	0.4249	0.4791
98 mph 120 degree with No Ice	123.00	0.907	-0.2713	0.5475	0.6110
98 mph 120 degree with No Ice	125.33	0.931	-0.2758	0.5891	0.6492

Reviewed for Code Compliance
Inspections Division
Approved with Conditions
Date: 11/27/17

98 mph 120 degree with No Ice	143.00	1.109	-0.2987	0.5252	0.6025
98 mph 120 degree with No Ice	152.33	1.193	-0.3106	0.4997	0.5884
98 mph 120 degree with No Ice	167.67	1.317	-0.3298	0.4851	0.5820
98 mph 120 degree with No Ice	170.00	1.337	-0.3311	0.4869	0.5881
98 mph 120 degree with No Ice	187.67	1.485	-0.3336	0.4291	0.5435
98 mph 120 degree with No Ice	190.00	1.502	-0.3337	0.4022	0.5188
98 mph 120 degree with No Ice	206.50	1.605	-0.3280	0.3541	0.4826
98 mph 120 degree with No Ice	215.00	1.655	-0.3253	0.4245	0.5280
98 mph 120 degree with No Ice	230.08	1.810	-0.3236	0.4952	0.5885
98 mph 120 degree with No Ice	239.58	1.887	-0.3223	0.4665	0.5646
98 mph 120 degree with No Ice	259.67	2.027	-0.3211	0.2721	0.4209
98 mph 120 degree with No Ice	270.00	2.064	-0.3204	0.2848	0.4287
98 mph 120 degree with No Ice	272.17	2.072	-0.3200	0.2550	0.4090
98 mph 180 degree with No Ice	37.00	0.124	0.0101	0.1969	0.1969
98 mph 180 degree with No Ice	99.33	0.377	0.0106	0.1761	0.1761
98 mph 180 degree with No Ice	123.00	0.510	0.0111	0.3090	0.3092
98 mph 180 degree with No Ice	125.33	0.524	0.0111	0.3940	0.3940
98 mph 180 degree with No Ice	143.00	0.629	0.0114	0.3020	0.3022
98 mph 180 degree with No Ice	152.33	0.677	0.0115	0.2845	0.2845
98 mph 180 degree with No Ice	167.67	0.745	0.0114	0.3273	0.3273
98 mph 180 degree with No Ice	170.00	0.757	0.0114	0.3020	0.3022
98 mph 180 degree with No Ice	187.67	0.848	0.0118	0.2477	0.2480
98 mph 180 degree with No Ice	190.00	0.858	0.0118	0.2618	0.2618
98 mph 180 degree with No Ice	206.50	0.915	0.0114	0.2001	0.2001
98 mph 180 degree with No Ice	215.00	0.942	0.0116	0.2541	0.2541
98 mph 180 degree with No Ice	230.08	1.058	0.0135	0.3579	0.3579
98 mph 180 degree with No Ice	239.58	1.112	0.0134	0.3298	0.3301
98 mph 180 degree with No Ice	259.67	1.206	0.0137	0.1428	0.1434
98 mph 180 degree with No Ice	270.00	1.218	0.0134	0.1430	0.1437
98 mph 180 degree with No Ice	272.17	1.222	0.0132	0.1280	0.1280
98 mph 210 degree with No Ice	37.00	0.182	0.1298	0.3008	0.3247
98 mph 210 degree with No Ice	99.33	0.588	0.2526	0.3651	0.4383
98 mph 210 degree with No Ice	123.00	0.790	0.2993	0.4753	0.5587
98 mph 210 degree with No Ice	125.33	0.811	0.3035	0.5371	0.6136
98 mph 210 degree with No Ice	143.00	0.966	0.3248	0.4546	0.5587
98 mph 210 degree with No Ice	152.33	1.038	0.3360	0.4313	0.5443
98 mph 210 degree with No Ice	167.67	1.144	0.3540	0.4364	0.5619
98 mph 210 degree with No Ice	170.00	1.161	0.3550	0.4241	0.5525
98 mph 210 degree with No Ice	187.67	1.288	0.3565	0.3599	0.5064
98 mph 210 degree with No Ice	190.00	1.302	0.3566	0.3528	0.5016
98 mph 210 degree with No Ice	206.50	1.387	0.3505	0.2913	0.4551
98 mph 210 degree with No Ice	215.00	1.428	0.3478	0.3481	0.4921
98 mph 210 degree with No Ice	230.08	1.564	0.3461	0.4292	0.5499
98 mph 210 degree with No Ice	239.58	1.630	0.3447	0.4002	0.5282
98 mph 210 degree with No Ice	259.67	1.746	0.3433	0.2127	0.4021
98 mph 210 degree with No Ice	270.00	1.772	0.3426	0.2238	0.3981
98 mph 210 degree with No Ice	272.17	1.778	0.3425	0.1975	0.3811
98 mph 240 degree with No Ice	37.00	0.209	0.0920	0.3463	0.3583
98 mph 240 degree with No Ice	99.33	0.676	0.2216	0.4249	0.4792
98 mph 240 degree with No Ice	123.00	0.907	0.2715	0.5475	0.6111
98 mph 240 degree with No Ice	125.33	0.931	0.2760	0.5891	0.6493
98 mph 240 degree with No Ice	143.00	1.109	0.2989	0.5252	0.6026
98 mph 240 degree with No Ice	152.33	1.193	0.3108	0.4997	0.5885
98 mph 240 degree with No Ice	167.67	1.317	0.3300	0.4851	0.5821
98 mph 240 degree with No Ice	170.00	1.337	0.3313	0.4869	0.5883
98 mph 240 degree with No Ice	187.67	1.485	0.3339	0.4291	0.5436
98 mph 240 degree with No Ice	190.00	1.502	0.3340	0.4022	0.5190
98 mph 240 degree with No Ice	206.50	1.605	0.3283	0.3541	0.4828
98 mph 240 degree with No Ice	215.00	1.655	0.3256	0.4245	0.5281
98 mph 240 degree with No Ice	230.08	1.810	0.3239	0.4952	0.5887
98 mph 240 degree with No Ice	239.58	1.887	0.3226	0.4665	0.5648
98 mph 240 degree with No Ice	259.67	2.027	0.3215	0.2721	0.4212

Reviewed for Code Compliance
Inspections Division
Approved with Conditions
Date: 11/27/17

98 mph 240 degree with No Ice	270.00	2.064	0.3207	0.2848	0.4289
98 mph 240 degree with No Ice	272.17	2.072	0.3203	0.2550	0.4093
98 mph 300 degree with No Ice	37.00	0.124	-0.0410	0.1975	0.2040
98 mph 300 degree with No Ice	99.33	0.379	-0.1160	0.1765	0.2167
98 mph 300 degree with No Ice	123.00	0.511	-0.1444	0.3164	0.3564
98 mph 300 degree with No Ice	125.33	0.525	-0.1470	0.3573	0.3903
98 mph 300 degree with No Ice	143.00	0.630	-0.1600	0.3001	0.3503
98 mph 300 degree with No Ice	152.33	0.678	-0.1669	0.2823	0.3342
98 mph 300 degree with No Ice	167.67	0.745	-0.1783	0.2844	0.3418
98 mph 300 degree with No Ice	170.00	0.757	-0.1790	0.2898	0.3518
98 mph 300 degree with No Ice	187.67	0.847	-0.1795	0.2544	0.3237
98 mph 300 degree with No Ice	190.00	0.856	-0.1796	0.2293	0.3017
98 mph 300 degree with No Ice	206.50	0.913	-0.1767	0.2000	0.2790
98 mph 300 degree with No Ice	215.00	0.940	-0.1748	0.2546	0.3133
98 mph 300 degree with No Ice	230.08	1.056	-0.1711	0.3588	0.4017
98 mph 300 degree with No Ice	239.58	1.111	-0.1702	0.3311	0.3842
98 mph 300 degree with No Ice	259.67	1.205	-0.1686	0.1444	0.2417
98 mph 300 degree with No Ice	270.00	1.218	-0.1685	0.1446	0.2414
98 mph 300 degree with No Ice	272.17	1.222	-0.1687	0.1296	0.2198
98 mph 330 degree with No Ice	37.00	0.181	-0.0109	0.3001	0.3007
98 mph 330 degree with No Ice	99.33	0.586	-0.0992	0.3664	0.3850
98 mph 330 degree with No Ice	123.00	0.789	-0.1332	0.4740	0.4983
98 mph 330 degree with No Ice	125.33	0.810	-0.1364	0.5503	0.5700
98 mph 330 degree with No Ice	143.00	0.965	-0.1516	0.4562	0.4871
98 mph 330 degree with No Ice	152.33	1.038	-0.1595	0.4330	0.4663
98 mph 330 degree with No Ice	167.67	1.144	-0.1729	0.4510	0.4880
98 mph 330 degree with No Ice	170.00	1.162	-0.1737	0.4289	0.4716
98 mph 330 degree with No Ice	187.67	1.289	-0.1746	0.3592	0.4103
98 mph 330 degree with No Ice	190.00	1.303	-0.1746	0.3641	0.4110
98 mph 330 degree with No Ice	206.50	1.389	-0.1710	0.2922	0.3513
98 mph 330 degree with No Ice	215.00	1.430	-0.1690	0.3484	0.3873
98 mph 330 degree with No Ice	230.08	1.565	-0.1661	0.4294	0.4666
98 mph 330 degree with No Ice	239.58	1.631	-0.1653	0.4001	0.4421
98 mph 330 degree with No Ice	259.67	1.748	-0.1639	0.2123	0.2866
98 mph 330 degree with No Ice	270.00	1.773	-0.1638	0.2234	0.2945
98 mph 330 degree with No Ice	272.17	1.780	-0.1639	0.1971	0.2722
40 mph Normal with 1 in Radial Ice	37.00	0.043	0.0112	0.0707	0.0716
40 mph Normal with 1 in Radial Ice	99.33	0.129	0.0267	0.0833	0.0874
40 mph Normal with 1 in Radial Ice	123.00	0.166	0.0321	0.0676	0.0720
40 mph Normal with 1 in Radial Ice	125.33	0.169	0.0326	0.0936	0.0991
40 mph Normal with 1 in Radial Ice	143.00	0.189	0.0363	0.0414	0.0522
40 mph Normal with 1 in Radial Ice	152.33	0.194	0.0381	0.0226	0.0443
40 mph Normal with 1 in Radial Ice	167.67	0.195	0.0408	0.0077	0.0409
40 mph Normal with 1 in Radial Ice	170.00	0.194	0.0411	0.0112	0.0424
40 mph Normal with 1 in Radial Ice	187.67	0.185	0.0447	0.0635	0.0777
40 mph Normal with 1 in Radial Ice	190.00	0.182	0.0453	0.0652	0.0794
40 mph Normal with 1 in Radial Ice	206.50	0.153	0.0487	0.1225	0.1307
40 mph Normal with 1 in Radial Ice	215.00	0.133	0.0503	0.1465	0.1549
40 mph Normal with 1 in Radial Ice	230.08	0.107	0.0535	0.1356	0.1432
40 mph Normal with 1 in Radial Ice	239.58	0.083	0.0553	0.1595	0.1689
40 mph Normal with 1 in Radial Ice	259.67	0.015	0.0582	0.2406	0.2475
40 mph Normal with 1 in Radial Ice	270.00	0.034	0.0589	0.2525	0.2544
40 mph Normal with 1 in Radial Ice	272.17	0.045	0.0592	0.3155	0.3155
40 mph 60 deg with 1 in Radial Ice	37.00	0.033	0.0056	0.0580	0.0581
40 mph 60 deg with 1 in Radial Ice	99.33	0.104	0.0111	0.0796	0.0802
40 mph 60 deg with 1 in Radial Ice	123.00	0.142	0.0133	0.0893	0.0902
40 mph 60 deg with 1 in Radial Ice	125.33	0.146	0.0135	0.1029	0.1035
40 mph 60 deg with 1 in Radial Ice	143.00	0.175	0.0143	0.0826	0.0838
40 mph 60 deg with 1 in Radial Ice	152.33	0.188	0.0147	0.0783	0.0792
40 mph 60 deg with 1 in Radial Ice	167.67	0.205	0.0153	0.0671	0.0683
40 mph 60 deg with 1 in Radial Ice	170.00	0.208	0.0153	0.0682	0.0699
40 mph 60 deg with 1 in Radial Ice	187.67	0.228	0.0153	0.0475	0.0498

Reviewed for Code Compliance
Inspections Division
Approved with Conditions
Date: 11/27/17

40 mph 60 deg with 1 in Radial Ice	190.00	0.229	0.0152	0.0388	0.0409
40 mph 60 deg with 1 in Radial Ice	206.50	0.236	0.0148	0.0135	0.0191
40 mph 60 deg with 1 in Radial Ice	215.00	0.236	0.0147	0.0200	0.0248
40 mph 60 deg with 1 in Radial Ice	230.08	0.252	0.0151	0.0308	0.0331
40 mph 60 deg with 1 in Radial Ice	239.58	0.254	0.0149	0.0119	0.0191
40 mph 60 deg with 1 in Radial Ice	259.67	0.248	0.0149	0.0637	0.0648
40 mph 60 deg with 1 in Radial Ice	270.00	0.233	0.0147	0.0730	0.0739
40 mph 60 deg with 1 in Radial Ice	272.17	0.231	0.0147	0.1199	0.1205
40 mph 90 deg with 1 in Radial Ice	37.00	0.039	0.0681	0.0645	0.0938
40 mph 90 deg with 1 in Radial Ice	99.33	0.119	0.0696	0.0827	0.1080
40 mph 90 deg with 1 in Radial Ice	123.00	0.155	0.0703	0.0808	0.1035
40 mph 90 deg with 1 in Radial Ice	125.33	0.158	0.0704	0.0877	0.1124
40 mph 90 deg with 1 in Radial Ice	143.00	0.183	0.0708	0.0647	0.0923
40 mph 90 deg with 1 in Radial Ice	152.33	0.191	0.0709	0.0580	0.0916
40 mph 90 deg with 1 in Radial Ice	167.67	0.200	0.0712	0.0457	0.0824
40 mph 90 deg with 1 in Radial Ice	170.00	0.202	0.0712	0.0484	0.0856
40 mph 90 deg with 1 in Radial Ice	187.67	0.208	0.0711	0.0540	0.0870
40 mph 90 deg with 1 in Radial Ice	190.00	0.208	0.0711	0.0567	0.0909
40 mph 90 deg with 1 in Radial Ice	206.50	0.200	0.0705	0.0837	0.1091
40 mph 90 deg with 1 in Radial Ice	215.00	0.193	0.0704	0.1073	0.1218
40 mph 90 deg with 1 in Radial Ice	230.08	0.195	0.0703	0.0916	0.1149
40 mph 90 deg with 1 in Radial Ice	239.58	0.191	0.0701	0.1065	0.1273
40 mph 90 deg with 1 in Radial Ice	259.67	0.177	0.0697	0.1694	0.1832
40 mph 90 deg with 1 in Radial Ice	270.00	0.167	0.0696	0.1797	0.1893
40 mph 90 deg with 1 in Radial Ice	272.17	0.165	0.0697	0.2409	0.2481
40 mph 120 deg with 1 in Radial Ice	37.00	0.043	0.0013	0.0712	0.0712
40 mph 120 deg with 1 in Radial Ice	99.33	0.130	0.0061	0.0832	0.0834
40 mph 120 deg with 1 in Radial Ice	123.00	0.167	0.0075	0.0697	0.0704
40 mph 120 deg with 1 in Radial Ice	125.33	0.169	0.0076	0.0794	0.0798
40 mph 120 deg with 1 in Radial Ice	143.00	0.190	0.0094	0.0402	0.0417
40 mph 120 deg with 1 in Radial Ice	152.33	0.194	0.0103	0.0215	0.0238
40 mph 120 deg with 1 in Radial Ice	167.67	0.194	0.0118	0.0182	0.0200
40 mph 120 deg with 1 in Radial Ice	170.00	0.194	0.0120	0.0136	0.0178
40 mph 120 deg with 1 in Radial Ice	187.67	0.185	0.0136	0.0625	0.0639
40 mph 120 deg with 1 in Radial Ice	190.00	0.181	0.0139	0.0742	0.0754
40 mph 120 deg with 1 in Radial Ice	206.50	0.152	0.0155	0.1227	0.1234
40 mph 120 deg with 1 in Radial Ice	215.00	0.132	0.0161	0.1465	0.1473
40 mph 120 deg with 1 in Radial Ice	230.08	0.106	0.0166	0.1353	0.1360
40 mph 120 deg with 1 in Radial Ice	239.58	0.082	0.0174	0.1590	0.1600
40 mph 120 deg with 1 in Radial Ice	259.67	0.015	0.0184	0.2399	0.2406
40 mph 120 deg with 1 in Radial Ice	270.00	0.035	0.0186	0.2518	0.2522
40 mph 120 deg with 1 in Radial Ice	272.17	0.045	0.0185	0.3148	0.3152
40 mph 180 deg with 1 in Radial Ice	37.00	0.033	0.0078	0.0576	0.0577
40 mph 180 deg with 1 in Radial Ice	99.33	0.104	0.0238	0.0796	0.0796
40 mph 180 deg with 1 in Radial Ice	123.00	0.142	0.0290	0.0868	0.0915
40 mph 180 deg with 1 in Radial Ice	125.33	0.145	0.0295	0.1167	0.1167
40 mph 180 deg with 1 in Radial Ice	143.00	0.175	0.0331	0.0835	0.0899
40 mph 180 deg with 1 in Radial Ice	152.33	0.188	0.0349	0.0793	0.0818
40 mph 180 deg with 1 in Radial Ice	167.67	0.206	0.0378	0.0827	0.0910
40 mph 180 deg with 1 in Radial Ice	170.00	0.208	0.0382	0.0703	0.0801
40 mph 180 deg with 1 in Radial Ice	187.67	0.229	0.0416	0.0463	0.0623
40 mph 180 deg with 1 in Radial Ice	190.00	0.230	0.0422	0.0466	0.0620
40 mph 180 deg with 1 in Radial Ice	206.50	0.237	0.0459	0.0136	0.0476
40 mph 180 deg with 1 in Radial Ice	215.00	0.237	0.0475	0.0200	0.0517
40 mph 180 deg with 1 in Radial Ice	230.08	0.253	0.0496	0.0305	0.0554
40 mph 180 deg with 1 in Radial Ice	239.58	0.255	0.0516	0.0114	0.0530
40 mph 180 deg with 1 in Radial Ice	259.67	0.249	0.0542	0.0644	0.0818
40 mph 180 deg with 1 in Radial Ice	270.00	0.234	0.0550	0.0737	0.0910
40 mph 180 deg with 1 in Radial Ice	272.17	0.231	0.0551	0.1204	0.1325
40 mph 210 deg with 1 in Radial Ice	37.00	0.039	0.0651	0.0642	0.0910
40 mph 210 deg with 1 in Radial Ice	99.33	0.118	0.0616	0.0826	0.1023
40 mph 210 deg with 1 in Radial Ice	123.00	0.155	0.0606	0.0782	0.0990

Reviewed for Code Compliance
Inspections Division
Approved with Conditions
Date: 11/27/17

40 mph 210 deg with 1 in Radial Ice	125.33	0.158	0.0605	0.1033	0.1190
40 mph 210 deg with 1 in Radial Ice	143.00	0.182	0.0592	0.0659	0.0886
40 mph 210 deg with 1 in Radial Ice	152.33	0.192	0.0585	0.0592	0.0819
40 mph 210 deg with 1 in Radial Ice	167.67	0.201	0.0574	0.0625	0.0838
40 mph 210 deg with 1 in Radial Ice	170.00	0.202	0.0572	0.0507	0.0764
40 mph 210 deg with 1 in Radial Ice	187.67	0.209	0.0557	0.0535	0.0752
40 mph 210 deg with 1 in Radial Ice	190.00	0.209	0.0555	0.0592	0.0808
40 mph 210 deg with 1 in Radial Ice	206.50	0.201	0.0540	0.0836	0.0996
40 mph 210 deg with 1 in Radial Ice	215.00	0.194	0.0534	0.1073	0.1186
40 mph 210 deg with 1 in Radial Ice	230.08	0.196	0.0527	0.0916	0.1057
40 mph 210 deg with 1 in Radial Ice	239.58	0.192	0.0520	0.1066	0.1172
40 mph 210 deg with 1 in Radial Ice	259.67	0.178	0.0510	0.1698	0.1764
40 mph 210 deg with 1 in Radial Ice	270.00	0.167	0.0506	0.1802	0.1871
40 mph 210 deg with 1 in Radial Ice	272.17	0.165	0.0505	0.2413	0.2465
40 mph 240 deg with 1 in Radial Ice	37.00	0.043	0.0043	0.0712	0.0712
40 mph 240 deg with 1 in Radial Ice	99.33	0.130	0.0113	0.0832	0.0835
40 mph 240 deg with 1 in Radial Ice	123.00	0.167	0.0138	0.0697	0.0711
40 mph 240 deg with 1 in Radial Ice	125.33	0.169	0.0140	0.0794	0.0798
40 mph 240 deg with 1 in Radial Ice	143.00	0.190	0.0150	0.0402	0.0429
40 mph 240 deg with 1 in Radial Ice	152.33	0.194	0.0155	0.0215	0.0241
40 mph 240 deg with 1 in Radial Ice	167.67	0.194	0.0162	0.0182	0.0207
40 mph 240 deg with 1 in Radial Ice	170.00	0.194	0.0163	0.0136	0.0212
40 mph 240 deg with 1 in Radial Ice	187.67	0.185	0.0173	0.0625	0.0641
40 mph 240 deg with 1 in Radial Ice	190.00	0.181	0.0174	0.0742	0.0757
40 mph 240 deg with 1 in Radial Ice	206.50	0.152	0.0187	0.1227	0.1241
40 mph 240 deg with 1 in Radial Ice	215.00	0.132	0.0192	0.1465	0.1474
40 mph 240 deg with 1 in Radial Ice	230.08	0.106	0.0202	0.1353	0.1368
40 mph 240 deg with 1 in Radial Ice	239.58	0.082	0.0209	0.1590	0.1601
40 mph 240 deg with 1 in Radial Ice	259.67	0.015	0.0219	0.2399	0.2407
40 mph 240 deg with 1 in Radial Ice	270.00	0.035	0.0221	0.2518	0.2527
40 mph 240 deg with 1 in Radial Ice	272.17	0.045	0.0221	0.3148	0.3156
40 mph 300 deg with 1 in Radial Ice	37.00	0.033	-0.0024	0.0580	0.0581
40 mph 300 deg with 1 in Radial Ice	99.33	0.104	-0.0090	0.0796	0.0801
40 mph 300 deg with 1 in Radial Ice	123.00	0.142	-0.0113	0.0893	0.0902
40 mph 300 deg with 1 in Radial Ice	125.33	0.146	-0.0116	0.1029	0.1035
40 mph 300 deg with 1 in Radial Ice	143.00	0.175	-0.0125	0.0826	0.0837
40 mph 300 deg with 1 in Radial Ice	152.33	0.188	-0.0131	0.0783	0.0792
40 mph 300 deg with 1 in Radial Ice	167.67	0.205	-0.0140	0.0671	0.0686
40 mph 300 deg with 1 in Radial Ice	170.00	0.208	-0.0141	0.0682	0.0698
40 mph 300 deg with 1 in Radial Ice	187.67	0.228	-0.0140	0.0475	0.0497
40 mph 300 deg with 1 in Radial Ice	190.00	0.229	-0.0140	0.0388	0.0408
40 mph 300 deg with 1 in Radial Ice	206.50	0.236	-0.0141	0.0135	0.0188
40 mph 300 deg with 1 in Radial Ice	215.00	0.236	-0.0140	0.0200	0.0246
40 mph 300 deg with 1 in Radial Ice	230.08	0.252	-0.0133	0.0308	0.0329
40 mph 300 deg with 1 in Radial Ice	239.58	0.254	-0.0133	0.0119	0.0188
40 mph 300 deg with 1 in Radial Ice	259.67	0.248	-0.0130	0.0637	0.0647
40 mph 300 deg with 1 in Radial Ice	270.00	0.233	-0.0131	0.0730	0.0739
40 mph 300 deg with 1 in Radial Ice	272.17	0.231	-0.0131	0.1199	0.1207
40 mph 330 deg with 1 in Radial Ice	37.00	0.039	0.0603	0.0641	0.0851
40 mph 330 deg with 1 in Radial Ice	99.33	0.118	0.0499	0.0826	0.0914
40 mph 330 deg with 1 in Radial Ice	123.00	0.154	0.0462	0.0788	0.0913
40 mph 330 deg with 1 in Radial Ice	125.33	0.158	0.0458	0.1015	0.1066
40 mph 330 deg with 1 in Radial Ice	143.00	0.182	0.0440	0.0656	0.0790
40 mph 330 deg with 1 in Radial Ice	152.33	0.191	0.0430	0.0587	0.0688
40 mph 330 deg with 1 in Radial Ice	167.67	0.201	0.0415	0.0489	0.0637
40 mph 330 deg with 1 in Radial Ice	170.00	0.202	0.0414	0.0486	0.0638
40 mph 330 deg with 1 in Radial Ice	187.67	0.209	0.0403	0.0546	0.0662
40 mph 330 deg with 1 in Radial Ice	190.00	0.209	0.0402	0.0494	0.0634
40 mph 330 deg with 1 in Radial Ice	206.50	0.200	0.0391	0.0835	0.0921
40 mph 330 deg with 1 in Radial Ice	215.00	0.193	0.0386	0.1073	0.1132
40 mph 330 deg with 1 in Radial Ice	230.08	0.196	0.0382	0.0919	0.0995
40 mph 330 deg with 1 in Radial Ice	239.58	0.191	0.0376	0.1070	0.1123

Reviewed for Code Compliance
Inspections Division
Approved with Conditions
Date: 11/27/17

40 mph 330 deg with 1 in Radial Ice	259.67	0.177	0.0368	0.1702	0.1729
40 mph 330 deg with 1 in Radial Ice	270.00	0.167	0.0365	0.1805	0.1842
40 mph 330 deg with 1 in Radial Ice	272.17	0.165	0.0365	0.2417	0.2444
Seismic Normal M1	37.00	0.002	0.0007	0.0055	0.0055
Seismic Normal M1	99.33	0.011	0.0014	0.0148	0.0148
Seismic Normal M1	123.00	0.018	0.0016	0.0183	0.0183
Seismic Normal M1	125.33	0.019	0.0016	0.0206	0.0207
Seismic Normal M1	143.00	0.025	0.0018	0.0189	0.0189
Seismic Normal M1	152.33	0.028	0.0019	0.0177	0.0178
Seismic Normal M1	167.67	0.032	0.0020	0.0193	0.0193
Seismic Normal M1	170.00	0.033	0.0020	0.0189	0.0189
Seismic Normal M1	187.67	0.039	0.0021	0.0170	0.0170
Seismic Normal M1	190.00	0.039	0.0022	0.0156	0.0157
Seismic Normal M1	206.50	0.043	0.0023	0.0124	0.0126
Seismic Normal M1	215.00	0.045	0.0024	0.0195	0.0195
Seismic Normal M1	230.08	0.052	0.0025	0.0227	0.0228
Seismic Normal M1	239.58	0.055	0.0026	0.0204	0.0204
Seismic Normal M1	259.67	0.060	0.0027	0.0050	0.0050
Seismic Normal M1	270.00	0.061	0.0027	0.0080	0.0085
Seismic Normal M1	272.17	0.060	0.0027	0.0196	0.0197
Seismic Normal M2	37.00	0.002	0.0004	0.0039	0.0039
Seismic Normal M2	99.33	0.005	0.0007	0.0071	0.0072
Seismic Normal M2	123.00	0.007	0.0008	0.0078	0.0079
Seismic Normal M2	125.33	0.007	0.0008	0.0082	0.0083
Seismic Normal M2	143.00	0.010	0.0009	0.0115	0.0115
Seismic Normal M2	152.33	0.012	0.0009	0.0122	0.0122
Seismic Normal M2	167.67	0.015	0.0010	0.0186	0.0186
Seismic Normal M2	170.00	0.016	0.0010	0.0192	0.0192
Seismic Normal M2	187.67	0.023	0.0010	0.0280	0.0280
Seismic Normal M2	190.00	0.024	0.0010	0.0282	0.0283
Seismic Normal M2	206.50	0.033	0.0011	0.0377	0.0377
Seismic Normal M2	215.00	0.039	0.0011	0.0505	0.0505
Seismic Normal M2	230.08	0.056	0.0013	0.0614	0.0615
Seismic Normal M2	239.58	0.066	0.0013	0.0635	0.0635
Seismic Normal M2	259.67	0.087	0.0014	0.0459	0.0459
Seismic Normal M2	270.00	0.094	0.0014	0.0509	0.0510
Seismic Normal M2	272.17	0.095	0.0013	0.0499	0.0500
Seismic 60 deg M1	37.00	0.002	0.0003	0.0061	0.0061
Seismic 60 deg M1	99.33	0.011	0.0004	0.0164	0.0164
Seismic 60 deg M1	123.00	0.018	0.0004	0.0174	0.0174
Seismic 60 deg M1	125.33	0.019	0.0004	0.0213	0.0213
Seismic 60 deg M1	143.00	0.024	0.0004	0.0177	0.0177
Seismic 60 deg M1	152.33	0.027	0.0004	0.0177	0.0177
Seismic 60 deg M1	167.67	0.031	0.0005	0.0181	0.0181
Seismic 60 deg M1	170.00	0.032	0.0005	0.0183	0.0183
Seismic 60 deg M1	187.67	0.038	0.0005	0.0161	0.0161
Seismic 60 deg M1	190.00	0.038	0.0005	0.0151	0.0151
Seismic 60 deg M1	206.50	0.042	0.0005	0.0122	0.0122
Seismic 60 deg M1	215.00	0.043	0.0006	0.0142	0.0142
Seismic 60 deg M1	230.08	0.051	0.0007	0.0231	0.0231
Seismic 60 deg M1	239.58	0.054	0.0007	0.0195	0.0195
Seismic 60 deg M1	259.67	0.059	0.0007	0.0045	0.0046
Seismic 60 deg M1	270.00	0.059	0.0008	0.0068	0.0069
Seismic 60 deg M1	272.17	0.059	0.0007	0.0197	0.0197
Seismic 60 deg M2	37.00	0.002	-0.0011	0.0045	0.0045
Seismic 60 deg M2	99.33	0.005	-0.0024	0.0072	0.0073
Seismic 60 deg M2	123.00	0.007	-0.0029	0.0070	0.0076
Seismic 60 deg M2	125.33	0.007	-0.0029	0.0088	0.0089
Seismic 60 deg M2	143.00	0.010	-0.0032	0.0104	0.0108
Seismic 60 deg M2	152.33	0.011	-0.0034	0.0123	0.0123
Seismic 60 deg M2	167.67	0.015	-0.0036	0.0172	0.0175
Seismic 60 deg M2	170.00	0.015	-0.0036	0.0183	0.0187

Reviewed for Code Compliance
Inspections Division
Approved with Conditions
Date: 11/27/17

Seismic 60 deg M2	187.67	0.022	-0.0039	0.0263	0.0266
Seismic 60 deg M2	190.00	0.023	-0.0040	0.0270	0.0272
Seismic 60 deg M2	206.50	0.032	-0.0043	0.0360	0.0362
Seismic 60 deg M2	215.00	0.038	-0.0044	0.0436	0.0436
Seismic 60 deg M2	230.08	0.054	-0.0047	0.0600	0.0600
Seismic 60 deg M2	239.58	0.064	-0.0049	0.0601	0.0603
Seismic 60 deg M2	259.67	0.083	-0.0051	0.0429	0.0432
Seismic 60 deg M2	270.00	0.090	-0.0052	0.0471	0.0474
Seismic 60 deg M2	272.17	0.092	-0.0051	0.0547	0.0547
Seismic 90 deg M1	37.00	0.002	-0.0006	0.0060	0.0060
Seismic 90 deg M1	99.33	0.011	-0.0019	0.0160	0.0160
Seismic 90 deg M1	123.00	0.018	-0.0023	0.0180	0.0180
Seismic 90 deg M1	125.33	0.019	-0.0024	0.0212	0.0212
Seismic 90 deg M1	143.00	0.025	-0.0027	0.0184	0.0185
Seismic 90 deg M1	152.33	0.028	-0.0028	0.0178	0.0178
Seismic 90 deg M1	167.67	0.032	-0.0031	0.0188	0.0188
Seismic 90 deg M1	170.00	0.032	-0.0031	0.0186	0.0187
Seismic 90 deg M1	187.67	0.038	-0.0034	0.0167	0.0167
Seismic 90 deg M1	190.00	0.039	-0.0035	0.0154	0.0156
Seismic 90 deg M1	206.50	0.042	-0.0037	0.0124	0.0127
Seismic 90 deg M1	215.00	0.044	-0.0039	0.0179	0.0179
Seismic 90 deg M1	230.08	0.051	-0.0042	0.0231	0.0231
Seismic 90 deg M1	239.58	0.055	-0.0043	0.0201	0.0201
Seismic 90 deg M1	259.67	0.059	-0.0046	0.0048	0.0064
Seismic 90 deg M1	270.00	0.060	-0.0046	0.0079	0.0091
Seismic 90 deg M1	272.17	0.060	-0.0046	0.0197	0.0198
Seismic 90 deg M2	37.00	0.002	0.0006	0.0043	0.0044
Seismic 90 deg M2	99.33	0.005	0.0013	0.0072	0.0073
Seismic 90 deg M2	123.00	0.007	0.0016	0.0076	0.0076
Seismic 90 deg M2	125.33	0.007	0.0016	0.0087	0.0089
Seismic 90 deg M2	143.00	0.010	0.0017	0.0111	0.0111
Seismic 90 deg M2	152.33	0.012	0.0018	0.0123	0.0125
Seismic 90 deg M2	167.67	0.015	0.0019	0.0180	0.0180
Seismic 90 deg M2	170.00	0.016	0.0020	0.0188	0.0188
Seismic 90 deg M2	187.67	0.023	0.0021	0.0273	0.0273
Seismic 90 deg M2	190.00	0.024	0.0021	0.0276	0.0277
Seismic 90 deg M2	206.50	0.033	0.0023	0.0369	0.0370
Seismic 90 deg M2	215.00	0.038	0.0024	0.0476	0.0477
Seismic 90 deg M2	230.08	0.055	0.0025	0.0609	0.0610
Seismic 90 deg M2	239.58	0.065	0.0026	0.0620	0.0620
Seismic 90 deg M2	259.67	0.085	0.0028	0.0445	0.0445
Seismic 90 deg M2	270.00	0.092	0.0028	0.0498	0.0498
Seismic 90 deg M2	272.17	0.093	0.0028	0.0539	0.0540
Seismic 120 deg M1	37.00	0.002	0.0001	0.0055	0.0055
Seismic 120 deg M1	99.33	0.011	0.0000	0.0148	0.0148
Seismic 120 deg M1	123.00	0.018	-0.0001	0.0183	0.0187
Seismic 120 deg M1	125.33	0.019	-0.0001	0.0206	0.0206
Seismic 120 deg M1	143.00	0.025	-0.0001	0.0189	0.0194
Seismic 120 deg M1	152.33	0.028	-0.0002	0.0177	0.0177
Seismic 120 deg M1	167.67	0.032	-0.0002	0.0193	0.0199
Seismic 120 deg M1	170.00	0.033	-0.0002	0.0189	0.0196
Seismic 120 deg M1	187.67	0.039	-0.0002	0.0170	0.0178
Seismic 120 deg M1	190.00	0.039	-0.0002	0.0156	0.0164
Seismic 120 deg M1	206.50	0.043	-0.0003	0.0124	0.0137
Seismic 120 deg M1	215.00	0.045	-0.0003	0.0195	0.0205
Seismic 120 deg M1	230.08	0.052	-0.0003	0.0227	0.0227
Seismic 120 deg M1	239.58	0.055	-0.0004	0.0204	0.0215
Seismic 120 deg M1	259.67	0.060	-0.0004	0.0050	0.0087
Seismic 120 deg M1	270.00	0.061	-0.0004	0.0080	0.0090
Seismic 120 deg M1	272.17	0.060	-0.0004	0.0196	0.0196
Seismic 120 deg M2	37.00	0.002	0.0008	0.0039	0.0040
Seismic 120 deg M2	99.33	0.005	0.0019	0.0071	0.0073

Reviewed for Code Compliance
Inspections Division
Approved with Conditions
Date: 11/27/17

Seismic 120 deg M2	123.00	0.007	0.0022	0.0078	0.0079
Seismic 120 deg M2	125.33	0.007	0.0023	0.0082	0.0085
Seismic 120 deg M2	143.00	0.010	0.0025	0.0115	0.0115
Seismic 120 deg M2	152.33	0.012	0.0026	0.0122	0.0124
Seismic 120 deg M2	167.67	0.015	0.0028	0.0186	0.0186
Seismic 120 deg M2	170.00	0.016	0.0028	0.0192	0.0192
Seismic 120 deg M2	187.67	0.023	0.0031	0.0280	0.0280
Seismic 120 deg M2	190.00	0.024	0.0031	0.0282	0.0284
Seismic 120 deg M2	206.50	0.033	0.0033	0.0377	0.0377
Seismic 120 deg M2	215.00	0.039	0.0034	0.0505	0.0505
Seismic 120 deg M2	230.08	0.056	0.0037	0.0614	0.0615
Seismic 120 deg M2	239.58	0.066	0.0038	0.0635	0.0635
Seismic 120 deg M2	259.67	0.087	0.0040	0.0459	0.0459
Seismic 120 deg M2	270.00	0.094	0.0040	0.0509	0.0511
Seismic 120 deg M2	272.17	0.095	0.0040	0.0499	0.0501
Seismic 180 deg M1	37.00	0.002	0.0003	0.0061	0.0061
Seismic 180 deg M1	99.33	0.011	0.0003	0.0164	0.0164
Seismic 180 deg M1	123.00	0.018	0.0004	0.0174	0.0174
Seismic 180 deg M1	125.33	0.019	0.0004	0.0213	0.0213
Seismic 180 deg M1	143.00	0.024	0.0004	0.0177	0.0177
Seismic 180 deg M1	152.33	0.027	0.0004	0.0177	0.0177
Seismic 180 deg M1	167.67	0.031	0.0005	0.0181	0.0181
Seismic 180 deg M1	170.00	0.032	0.0005	0.0183	0.0183
Seismic 180 deg M1	187.67	0.038	0.0005	0.0161	0.0161
Seismic 180 deg M1	190.00	0.038	0.0005	0.0151	0.0151
Seismic 180 deg M1	206.50	0.042	0.0006	0.0122	0.0122
Seismic 180 deg M1	215.00	0.043	0.0006	0.0142	0.0142
Seismic 180 deg M1	230.08	0.051	0.0006	0.0231	0.0231
Seismic 180 deg M1	239.58	0.054	0.0006	0.0195	0.0195
Seismic 180 deg M1	259.67	0.059	0.0007	0.0045	0.0046
Seismic 180 deg M1	270.00	0.059	0.0007	0.0068	0.0068
Seismic 180 deg M1	272.17	0.059	0.0007	0.0197	0.0197
Seismic 180 deg M2	37.00	0.002	0.0013	0.0045	0.0045
Seismic 180 deg M2	99.33	0.005	0.0031	0.0072	0.0076
Seismic 180 deg M2	123.00	0.007	0.0037	0.0070	0.0080
Seismic 180 deg M2	125.33	0.007	0.0037	0.0088	0.0088
Seismic 180 deg M2	143.00	0.010	0.0042	0.0104	0.0113
Seismic 180 deg M2	152.33	0.011	0.0044	0.0123	0.0123
Seismic 180 deg M2	167.67	0.015	0.0047	0.0172	0.0179
Seismic 180 deg M2	170.00	0.015	0.0047	0.0183	0.0190
Seismic 180 deg M2	187.67	0.022	0.0051	0.0263	0.0268
Seismic 180 deg M2	190.00	0.023	0.0052	0.0270	0.0275
Seismic 180 deg M2	206.50	0.032	0.0056	0.0360	0.0365
Seismic 180 deg M2	215.00	0.038	0.0058	0.0436	0.0436
Seismic 180 deg M2	230.08	0.054	0.0062	0.0600	0.0600
Seismic 180 deg M2	239.58	0.064	0.0064	0.0601	0.0605
Seismic 180 deg M2	259.67	0.083	0.0068	0.0429	0.0435
Seismic 180 deg M2	270.00	0.090	0.0068	0.0471	0.0477
Seismic 180 deg M2	272.17	0.092	0.0068	0.0547	0.0547
Seismic 210 deg M1	37.00	0.002	0.0003	0.0060	0.0060
Seismic 210 deg M1	99.33	0.011	0.0003	0.0160	0.0160
Seismic 210 deg M1	123.00	0.018	0.0002	0.0180	0.0180
Seismic 210 deg M1	125.33	0.019	0.0002	0.0212	0.0212
Seismic 210 deg M1	143.00	0.025	0.0002	0.0184	0.0184
Seismic 210 deg M1	152.33	0.028	0.0002	0.0178	0.0178
Seismic 210 deg M1	167.67	0.032	0.0002	0.0188	0.0188
Seismic 210 deg M1	170.00	0.032	0.0002	0.0186	0.0186
Seismic 210 deg M1	187.67	0.038	0.0002	0.0167	0.0167
Seismic 210 deg M1	190.00	0.039	0.0002	0.0154	0.0154
Seismic 210 deg M1	206.50	0.042	0.0002	0.0124	0.0124
Seismic 210 deg M1	215.00	0.044	0.0002	0.0179	0.0179
Seismic 210 deg M1	230.08	0.051	-0.0002	0.0231	0.0231

Reviewed for Code Compliance
Inspections Division
Approved with Conditions
Date: 11/27/17

Seismic 210 deg M1	239.58	0.055	-0.0002	0.0201	0.0201
Seismic 210 deg M1	259.67	0.059	-0.0002	0.0048	0.0048
Seismic 210 deg M1	270.00	0.060	-0.0002	0.0079	0.0079
Seismic 210 deg M1	272.17	0.060	-0.0002	0.0197	0.0197
Seismic 210 deg M2	37.00	0.002	0.0002	0.0043	0.0043
Seismic 210 deg M2	99.33	0.005	0.0002	0.0072	0.0072
Seismic 210 deg M2	123.00	0.007	0.0003	0.0076	0.0076
Seismic 210 deg M2	125.33	0.007	0.0003	0.0087	0.0087
Seismic 210 deg M2	143.00	0.010	0.0003	0.0111	0.0111
Seismic 210 deg M2	152.33	0.012	0.0003	0.0123	0.0123
Seismic 210 deg M2	167.67	0.015	0.0003	0.0180	0.0180
Seismic 210 deg M2	170.00	0.016	0.0003	0.0188	0.0188
Seismic 210 deg M2	187.67	0.023	0.0003	0.0273	0.0273
Seismic 210 deg M2	190.00	0.024	0.0003	0.0276	0.0276
Seismic 210 deg M2	206.50	0.033	0.0003	0.0369	0.0369
Seismic 210 deg M2	215.00	0.038	0.0003	0.0476	0.0476
Seismic 210 deg M2	230.08	0.055	0.0003	0.0609	0.0609
Seismic 210 deg M2	239.58	0.065	0.0003	0.0620	0.0620
Seismic 210 deg M2	259.67	0.085	0.0003	0.0445	0.0445
Seismic 210 deg M2	270.00	0.092	0.0003	0.0498	0.0498
Seismic 210 deg M2	272.17	0.093	0.0003	0.0539	0.0539
Seismic 240 deg M1	37.00	0.002	0.0003	0.0055	0.0055
Seismic 240 deg M1	99.33	0.011	0.0003	0.0148	0.0148
Seismic 240 deg M1	123.00	0.018	0.0003	0.0183	0.0183
Seismic 240 deg M1	125.33	0.019	0.0003	0.0206	0.0206
Seismic 240 deg M1	143.00	0.025	0.0003	0.0189	0.0189
Seismic 240 deg M1	152.33	0.028	0.0003	0.0177	0.0177
Seismic 240 deg M1	167.67	0.032	0.0003	0.0193	0.0193
Seismic 240 deg M1	170.00	0.033	0.0003	0.0189	0.0189
Seismic 240 deg M1	187.67	0.039	0.0003	0.0170	0.0170
Seismic 240 deg M1	190.00	0.039	0.0003	0.0156	0.0156
Seismic 240 deg M1	206.50	0.043	0.0003	0.0124	0.0124
Seismic 240 deg M1	215.00	0.045	0.0003	0.0195	0.0195
Seismic 240 deg M1	230.08	0.052	0.0003	0.0227	0.0227
Seismic 240 deg M1	239.58	0.055	0.0003	0.0204	0.0204
Seismic 240 deg M1	259.67	0.060	0.0003	0.0050	0.0050
Seismic 240 deg M1	270.00	0.061	0.0003	0.0080	0.0080
Seismic 240 deg M1	272.17	0.060	0.0003	0.0196	0.0196
Seismic 240 deg M2	37.00	0.002	0.0006	0.0039	0.0039
Seismic 240 deg M2	99.33	0.005	0.0012	0.0071	0.0072
Seismic 240 deg M2	123.00	0.007	0.0015	0.0078	0.0078
Seismic 240 deg M2	125.33	0.007	0.0015	0.0082	0.0083
Seismic 240 deg M2	143.00	0.010	0.0016	0.0115	0.0115
Seismic 240 deg M2	152.33	0.012	0.0017	0.0122	0.0123
Seismic 240 deg M2	167.67	0.015	0.0018	0.0186	0.0186
Seismic 240 deg M2	170.00	0.016	0.0018	0.0192	0.0192
Seismic 240 deg M2	187.67	0.023	0.0020	0.0280	0.0280
Seismic 240 deg M2	190.00	0.024	0.0020	0.0282	0.0283
Seismic 240 deg M2	206.50	0.033	0.0021	0.0377	0.0377
Seismic 240 deg M2	215.00	0.039	0.0022	0.0505	0.0505
Seismic 240 deg M2	230.08	0.056	0.0024	0.0614	0.0615
Seismic 240 deg M2	239.58	0.066	0.0024	0.0635	0.0635
Seismic 240 deg M2	259.67	0.087	0.0026	0.0459	0.0459
Seismic 240 deg M2	270.00	0.094	0.0026	0.0509	0.0510
Seismic 240 deg M2	272.17	0.095	0.0026	0.0499	0.0500
Seismic 300 deg M1	37.00	0.002	0.0003	0.0061	0.0061
Seismic 300 deg M1	99.33	0.011	0.0003	0.0164	0.0164
Seismic 300 deg M1	123.00	0.018	0.0002	0.0174	0.0174
Seismic 300 deg M1	125.33	0.019	0.0002	0.0213	0.0213
Seismic 300 deg M1	143.00	0.024	0.0002	0.0177	0.0177
Seismic 300 deg M1	152.33	0.027	0.0002	0.0177	0.0177
Seismic 300 deg M1	167.67	0.031	0.0003	0.0181	0.0181

Reviewed for Code Compliance
Inspections Division
Approved with Conditions
Date: 11/27/17

Seismic 300 deg M1	170.00	0.032	0.0003	0.0183	0.0183
Seismic 300 deg M1	187.67	0.038	0.0003	0.0161	0.0161
Seismic 300 deg M1	190.00	0.038	0.0003	0.0151	0.0151
Seismic 300 deg M1	206.50	0.042	0.0004	0.0122	0.0122
Seismic 300 deg M1	215.00	0.043	0.0004	0.0142	0.0142
Seismic 300 deg M1	230.08	0.051	0.0005	0.0231	0.0231
Seismic 300 deg M1	239.58	0.054	0.0005	0.0195	0.0195
Seismic 300 deg M1	259.67	0.059	0.0006	0.0045	0.0046
Seismic 300 deg M1	270.00	0.059	0.0006	0.0068	0.0068
Seismic 300 deg M1	272.17	0.059	0.0006	0.0197	0.0197
Seismic 300 deg M2	37.00	0.002	0.0002	0.0045	0.0045
Seismic 300 deg M2	99.33	0.005	0.0008	0.0072	0.0072
Seismic 300 deg M2	123.00	0.007	0.0010	0.0070	0.0071
Seismic 300 deg M2	125.33	0.007	0.0010	0.0088	0.0089
Seismic 300 deg M2	143.00	0.010	0.0011	0.0104	0.0104
Seismic 300 deg M2	152.33	0.011	0.0012	0.0123	0.0123
Seismic 300 deg M2	167.67	0.015	0.0013	0.0172	0.0172
Seismic 300 deg M2	170.00	0.015	0.0013	0.0183	0.0184
Seismic 300 deg M2	187.67	0.022	0.0015	0.0263	0.0263
Seismic 300 deg M2	190.00	0.023	0.0015	0.0270	0.0270
Seismic 300 deg M2	206.50	0.032	0.0016	0.0360	0.0360
Seismic 300 deg M2	215.00	0.038	0.0017	0.0436	0.0436
Seismic 300 deg M2	230.08	0.054	0.0017	0.0600	0.0600
Seismic 300 deg M2	239.58	0.064	0.0018	0.0601	0.0601
Seismic 300 deg M2	259.67	0.083	0.0019	0.0429	0.0429
Seismic 300 deg M2	270.00	0.090	0.0019	0.0471	0.0472
Seismic 300 deg M2	272.17	0.092	0.0020	0.0547	0.0547
Seismic 330 deg M1	37.00	0.002	-0.0007	0.0060	0.0060
Seismic 330 deg M1	99.33	0.011	-0.0014	0.0160	0.0160
Seismic 330 deg M1	123.00	0.018	-0.0017	0.0180	0.0181
Seismic 330 deg M1	125.33	0.019	-0.0017	0.0212	0.0212
Seismic 330 deg M1	143.00	0.025	-0.0019	0.0184	0.0185
Seismic 330 deg M1	152.33	0.028	-0.0019	0.0178	0.0178
Seismic 330 deg M1	167.67	0.032	-0.0021	0.0188	0.0189
Seismic 330 deg M1	170.00	0.032	-0.0021	0.0186	0.0188
Seismic 330 deg M1	187.67	0.038	-0.0023	0.0167	0.0168
Seismic 330 deg M1	190.00	0.039	-0.0023	0.0154	0.0154
Seismic 330 deg M1	206.50	0.042	-0.0025	0.0124	0.0126
Seismic 330 deg M1	215.00	0.044	-0.0025	0.0179	0.0181
Seismic 330 deg M1	230.08	0.051	-0.0026	0.0231	0.0231
Seismic 330 deg M1	239.58	0.055	-0.0027	0.0201	0.0203
Seismic 330 deg M1	259.67	0.059	-0.0029	0.0048	0.0056
Seismic 330 deg M1	270.00	0.060	-0.0029	0.0079	0.0079
Seismic 330 deg M1	272.17	0.060	-0.0029	0.0197	0.0197
Seismic 330 deg M2	37.00	0.002	0.0003	0.0043	0.0044
Seismic 330 deg M2	99.33	0.005	0.0008	0.0072	0.0072
Seismic 330 deg M2	123.00	0.007	0.0010	0.0076	0.0076
Seismic 330 deg M2	125.33	0.007	0.0010	0.0087	0.0087
Seismic 330 deg M2	143.00	0.010	0.0011	0.0111	0.0111
Seismic 330 deg M2	152.33	0.012	0.0012	0.0123	0.0124
Seismic 330 deg M2	167.67	0.015	0.0013	0.0180	0.0180
Seismic 330 deg M2	170.00	0.016	0.0013	0.0188	0.0188
Seismic 330 deg M2	187.67	0.023	0.0015	0.0273	0.0273
Seismic 330 deg M2	190.00	0.024	0.0015	0.0276	0.0277
Seismic 330 deg M2	206.50	0.033	0.0016	0.0369	0.0369
Seismic 330 deg M2	215.00	0.038	0.0017	0.0476	0.0476
Seismic 330 deg M2	230.08	0.055	0.0017	0.0609	0.0609
Seismic 330 deg M2	239.58	0.065	0.0018	0.0620	0.0620
Seismic 330 deg M2	259.67	0.085	0.0018	0.0445	0.0445
Seismic 330 deg M2	270.00	0.092	0.0019	0.0498	0.0498
Seismic 330 deg M2	272.17	0.093	0.0019	0.0539	0.0539
Seismic (Reduced DL) Normal M1	37.00	0.002	0.0002	0.0054	0.0054

Reviewed for Code Compliance
Inspections Division
Approved with Conditions
Date: 11/27/17

Seismic (Reduced DL) Normal M1	99.33	0.011	0.0002	0.0141	0.0141
Seismic (Reduced DL) Normal M1	123.00	0.018	0.0002	0.0180	0.0180
Seismic (Reduced DL) Normal M1	125.33	0.019	0.0002	0.0202	0.0202
Seismic (Reduced DL) Normal M1	143.00	0.025	0.0002	0.0185	0.0185
Seismic (Reduced DL) Normal M1	152.33	0.028	0.0002	0.0173	0.0173
Seismic (Reduced DL) Normal M1	167.67	0.032	0.0002	0.0187	0.0187
Seismic (Reduced DL) Normal M1	170.00	0.032	0.0002	0.0188	0.0188
Seismic (Reduced DL) Normal M1	187.67	0.038	0.0002	0.0166	0.0166
Seismic (Reduced DL) Normal M1	190.00	0.039	0.0002	0.0153	0.0153
Seismic (Reduced DL) Normal M1	206.50	0.042	0.0002	0.0121	0.0121
Seismic (Reduced DL) Normal M1	215.00	0.044	0.0002	0.0193	0.0193
Seismic (Reduced DL) Normal M1	230.08	0.051	0.0002	0.0224	0.0224
Seismic (Reduced DL) Normal M1	239.58	0.055	0.0002	0.0202	0.0202
Seismic (Reduced DL) Normal M1	259.67	0.059	0.0001	0.0049	0.0049
Seismic (Reduced DL) Normal M1	270.00	0.060	0.0001	0.0080	0.0080
Seismic (Reduced DL) Normal M1	272.17	0.060	0.0001	0.0200	0.0200
Seismic (Reduced DL) Normal M2	37.00	0.002	0.0003	0.0038	0.0038
Seismic (Reduced DL) Normal M2	99.33	0.005	0.0005	0.0065	0.0065
Seismic (Reduced DL) Normal M2	123.00	0.007	0.0005	0.0076	0.0076
Seismic (Reduced DL) Normal M2	125.33	0.007	0.0005	0.0080	0.0080
Seismic (Reduced DL) Normal M2	143.00	0.010	0.0005	0.0112	0.0112
Seismic (Reduced DL) Normal M2	152.33	0.012	0.0005	0.0119	0.0119
Seismic (Reduced DL) Normal M2	167.67	0.015	0.0006	0.0180	0.0180
Seismic (Reduced DL) Normal M2	170.00	0.016	0.0006	0.0190	0.0190
Seismic (Reduced DL) Normal M2	187.67	0.023	0.0006	0.0274	0.0274
Seismic (Reduced DL) Normal M2	190.00	0.024	0.0006	0.0277	0.0277
Seismic (Reduced DL) Normal M2	206.50	0.033	0.0006	0.0371	0.0371
Seismic (Reduced DL) Normal M2	215.00	0.038	0.0006	0.0497	0.0497
Seismic (Reduced DL) Normal M2	230.08	0.056	0.0007	0.0605	0.0605
Seismic (Reduced DL) Normal M2	239.58	0.065	0.0007	0.0626	0.0626
Seismic (Reduced DL) Normal M2	259.67	0.085	0.0008	0.0450	0.0450
Seismic (Reduced DL) Normal M2	270.00	0.093	0.0008	0.0502	0.0502
Seismic (Reduced DL) Normal M2	272.17	0.094	0.0007	0.0495	0.0495
Seismic (Reduced DL) 60 deg M1	37.00	0.002	0.0003	0.0060	0.0060
Seismic (Reduced DL) 60 deg M1	99.33	0.011	0.0003	0.0156	0.0156
Seismic (Reduced DL) 60 deg M1	123.00	0.018	0.0003	0.0171	0.0171
Seismic (Reduced DL) 60 deg M1	125.33	0.018	0.0003	0.0208	0.0208
Seismic (Reduced DL) 60 deg M1	143.00	0.024	0.0003	0.0175	0.0175
Seismic (Reduced DL) 60 deg M1	152.33	0.027	0.0003	0.0174	0.0174
Seismic (Reduced DL) 60 deg M1	167.67	0.031	0.0003	0.0178	0.0178
Seismic (Reduced DL) 60 deg M1	170.00	0.032	0.0003	0.0181	0.0181
Seismic (Reduced DL) 60 deg M1	187.67	0.037	0.0003	0.0159	0.0159
Seismic (Reduced DL) 60 deg M1	190.00	0.038	0.0003	0.0149	0.0149
Seismic (Reduced DL) 60 deg M1	206.50	0.041	0.0003	0.0119	0.0119
Seismic (Reduced DL) 60 deg M1	215.00	0.043	0.0003	0.0140	0.0140
Seismic (Reduced DL) 60 deg M1	230.08	0.050	0.0002	0.0228	0.0228
Seismic (Reduced DL) 60 deg M1	239.58	0.053	0.0002	0.0193	0.0193
Seismic (Reduced DL) 60 deg M1	259.67	0.058	0.0002	0.0044	0.0044
Seismic (Reduced DL) 60 deg M1	270.00	0.058	0.0002	0.0070	0.0070
Seismic (Reduced DL) 60 deg M1	272.17	0.058	0.0002	0.0201	0.0201
Seismic (Reduced DL) 60 deg M2	37.00	0.002	0.0002	0.0044	0.0044
Seismic (Reduced DL) 60 deg M2	99.33	0.005	-0.0002	0.0066	0.0066
Seismic (Reduced DL) 60 deg M2	123.00	0.007	-0.0002	0.0069	0.0069
Seismic (Reduced DL) 60 deg M2	125.33	0.007	-0.0002	0.0086	0.0086
Seismic (Reduced DL) 60 deg M2	143.00	0.010	-0.0002	0.0101	0.0101
Seismic (Reduced DL) 60 deg M2	152.33	0.011	-0.0002	0.0120	0.0120
Seismic (Reduced DL) 60 deg M2	167.67	0.015	-0.0002	0.0168	0.0168
Seismic (Reduced DL) 60 deg M2	170.00	0.015	-0.0002	0.0182	0.0182
Seismic (Reduced DL) 60 deg M2	187.67	0.022	-0.0002	0.0259	0.0259
Seismic (Reduced DL) 60 deg M2	190.00	0.023	-0.0002	0.0266	0.0266
Seismic (Reduced DL) 60 deg M2	206.50	0.032	-0.0002	0.0356	0.0356
Seismic (Reduced DL) 60 deg M2	215.00	0.037	-0.0002	0.0430	0.0430

Reviewed for Code Compliance
Inspections Division
Approved with Conditions
Date: 11/27/17

Seismic (Reduced DL) 60 deg M2	230.08	0.054	-0.0003	0.0593	0.0593
Seismic (Reduced DL) 60 deg M2	239.58	0.063	-0.0003	0.0595	0.0595
Seismic (Reduced DL) 60 deg M2	259.67	0.082	-0.0003	0.0423	0.0423
Seismic (Reduced DL) 60 deg M2	270.00	0.089	-0.0003	0.0464	0.0464
Seismic (Reduced DL) 60 deg M2	272.17	0.090	-0.0002	0.0546	0.0546
Seismic (Reduced DL) 90 deg M1	37.00	0.002	0.0003	0.0058	0.0058
Seismic (Reduced DL) 90 deg M1	99.33	0.011	0.0003	0.0153	0.0153
Seismic (Reduced DL) 90 deg M1	123.00	0.018	0.0003	0.0177	0.0177
Seismic (Reduced DL) 90 deg M1	125.33	0.019	0.0003	0.0208	0.0208
Seismic (Reduced DL) 90 deg M1	143.00	0.025	0.0003	0.0181	0.0181
Seismic (Reduced DL) 90 deg M1	152.33	0.027	0.0003	0.0175	0.0175
Seismic (Reduced DL) 90 deg M1	167.67	0.031	0.0003	0.0183	0.0183
Seismic (Reduced DL) 90 deg M1	170.00	0.032	0.0003	0.0185	0.0185
Seismic (Reduced DL) 90 deg M1	187.67	0.038	0.0003	0.0164	0.0164
Seismic (Reduced DL) 90 deg M1	190.00	0.038	0.0003	0.0151	0.0151
Seismic (Reduced DL) 90 deg M1	206.50	0.042	0.0003	0.0122	0.0122
Seismic (Reduced DL) 90 deg M1	215.00	0.043	0.0003	0.0177	0.0177
Seismic (Reduced DL) 90 deg M1	230.08	0.051	0.0002	0.0228	0.0228
Seismic (Reduced DL) 90 deg M1	239.58	0.054	0.0002	0.0199	0.0199
Seismic (Reduced DL) 90 deg M1	259.67	0.059	0.0002	0.0047	0.0047
Seismic (Reduced DL) 90 deg M1	270.00	0.059	0.0002	0.0078	0.0078
Seismic (Reduced DL) 90 deg M1	272.17	0.059	0.0002	0.0201	0.0201
Seismic (Reduced DL) 90 deg M2	37.00	0.002	0.0003	0.0042	0.0042
Seismic (Reduced DL) 90 deg M2	99.33	0.005	0.0005	0.0066	0.0066
Seismic (Reduced DL) 90 deg M2	123.00	0.007	0.0005	0.0074	0.0074
Seismic (Reduced DL) 90 deg M2	125.33	0.007	0.0005	0.0085	0.0085
Seismic (Reduced DL) 90 deg M2	143.00	0.010	0.0006	0.0108	0.0109
Seismic (Reduced DL) 90 deg M2	152.33	0.011	0.0006	0.0121	0.0121
Seismic (Reduced DL) 90 deg M2	167.67	0.015	0.0006	0.0175	0.0175
Seismic (Reduced DL) 90 deg M2	170.00	0.015	0.0006	0.0186	0.0186
Seismic (Reduced DL) 90 deg M2	187.67	0.022	0.0006	0.0268	0.0268
Seismic (Reduced DL) 90 deg M2	190.00	0.023	0.0007	0.0272	0.0272
Seismic (Reduced DL) 90 deg M2	206.50	0.032	0.0007	0.0364	0.0364
Seismic (Reduced DL) 90 deg M2	215.00	0.038	0.0007	0.0470	0.0470
Seismic (Reduced DL) 90 deg M2	230.08	0.055	0.0008	0.0601	0.0601
Seismic (Reduced DL) 90 deg M2	239.58	0.064	0.0008	0.0612	0.0612
Seismic (Reduced DL) 90 deg M2	259.67	0.084	0.0008	0.0438	0.0438
Seismic (Reduced DL) 90 deg M2	270.00	0.091	0.0008	0.0490	0.0490
Seismic (Reduced DL) 90 deg M2	272.17	0.092	0.0008	0.0537	0.0537
Seismic (Reduced DL) 120 deg M1	37.00	0.002	0.0002	0.0054	0.0054
Seismic (Reduced DL) 120 deg M1	99.33	0.011	0.0001	0.0141	0.0141
Seismic (Reduced DL) 120 deg M1	123.00	0.018	0.0001	0.0180	0.0180
Seismic (Reduced DL) 120 deg M1	125.33	0.019	0.0001	0.0202	0.0202
Seismic (Reduced DL) 120 deg M1	143.00	0.025	0.0001	0.0185	0.0185
Seismic (Reduced DL) 120 deg M1	152.33	0.028	0.0001	0.0173	0.0173
Seismic (Reduced DL) 120 deg M1	167.67	0.032	0.0000	0.0187	0.0187
Seismic (Reduced DL) 120 deg M1	170.00	0.032	0.0000	0.0188	0.0188
Seismic (Reduced DL) 120 deg M1	187.67	0.038	0.0000	0.0166	0.0166
Seismic (Reduced DL) 120 deg M1	190.00	0.039	0.0000	0.0153	0.0153
Seismic (Reduced DL) 120 deg M1	206.50	0.042	0.0000	0.0121	0.0121
Seismic (Reduced DL) 120 deg M1	215.00	0.044	0.0000	0.0193	0.0193
Seismic (Reduced DL) 120 deg M1	230.08	0.051	-0.0001	0.0224	0.0224
Seismic (Reduced DL) 120 deg M1	239.58	0.055	-0.0001	0.0202	0.0202
Seismic (Reduced DL) 120 deg M1	259.67	0.059	-0.0001	0.0049	0.0049
Seismic (Reduced DL) 120 deg M1	270.00	0.060	-0.0001	0.0080	0.0080
Seismic (Reduced DL) 120 deg M1	272.17	0.060	-0.0001	0.0200	0.0200
Seismic (Reduced DL) 120 deg M2	37.00	0.002	0.0003	0.0038	0.0038
Seismic (Reduced DL) 120 deg M2	99.33	0.005	0.0005	0.0065	0.0065
Seismic (Reduced DL) 120 deg M2	123.00	0.007	0.0006	0.0076	0.0076
Seismic (Reduced DL) 120 deg M2	125.33	0.007	0.0006	0.0080	0.0080
Seismic (Reduced DL) 120 deg M2	143.00	0.010	0.0006	0.0112	0.0112
Seismic (Reduced DL) 120 deg M2	152.33	0.012	0.0007	0.0119	0.0119

Reviewed for Code Compliance
Inspections Division
Approved with Conditions
Date: 11/27/17

Seismic (Reduced DL) 120 deg M2	167.67	0.015	0.0007	0.0180	0.0180
Seismic (Reduced DL) 120 deg M2	170.00	0.016	0.0007	0.0190	0.0190
Seismic (Reduced DL) 120 deg M2	187.67	0.023	0.0008	0.0274	0.0274
Seismic (Reduced DL) 120 deg M2	190.00	0.024	0.0008	0.0277	0.0277
Seismic (Reduced DL) 120 deg M2	206.50	0.033	0.0008	0.0371	0.0371
Seismic (Reduced DL) 120 deg M2	215.00	0.038	0.0008	0.0497	0.0497
Seismic (Reduced DL) 120 deg M2	230.08	0.056	0.0009	0.0605	0.0605
Seismic (Reduced DL) 120 deg M2	239.58	0.065	0.0009	0.0626	0.0626
Seismic (Reduced DL) 120 deg M2	259.67	0.085	0.0010	0.0450	0.0450
Seismic (Reduced DL) 120 deg M2	270.00	0.093	0.0010	0.0502	0.0502
Seismic (Reduced DL) 120 deg M2	272.17	0.094	0.0010	0.0495	0.0495
Seismic (Reduced DL) 180 deg M1	37.00	0.002	0.0003	0.0060	0.0060
Seismic (Reduced DL) 180 deg M1	99.33	0.011	0.0003	0.0156	0.0156
Seismic (Reduced DL) 180 deg M1	123.00	0.018	0.0003	0.0171	0.0171
Seismic (Reduced DL) 180 deg M1	125.33	0.018	0.0003	0.0208	0.0208
Seismic (Reduced DL) 180 deg M1	143.00	0.024	0.0003	0.0175	0.0175
Seismic (Reduced DL) 180 deg M1	152.33	0.027	0.0003	0.0174	0.0174
Seismic (Reduced DL) 180 deg M1	167.67	0.031	0.0003	0.0178	0.0178
Seismic (Reduced DL) 180 deg M1	170.00	0.032	0.0003	0.0181	0.0182
Seismic (Reduced DL) 180 deg M1	187.67	0.037	0.0002	0.0159	0.0159
Seismic (Reduced DL) 180 deg M1	190.00	0.038	0.0002	0.0149	0.0149
Seismic (Reduced DL) 180 deg M1	206.50	0.041	0.0003	0.0119	0.0119
Seismic (Reduced DL) 180 deg M1	215.00	0.043	0.0002	0.0140	0.0140
Seismic (Reduced DL) 180 deg M1	230.08	0.050	0.0002	0.0228	0.0228
Seismic (Reduced DL) 180 deg M1	239.58	0.053	0.0002	0.0193	0.0193
Seismic (Reduced DL) 180 deg M1	259.67	0.058	0.0002	0.0044	0.0045
Seismic (Reduced DL) 180 deg M1	270.00	0.058	0.0002	0.0070	0.0070
Seismic (Reduced DL) 180 deg M1	272.17	0.058	0.0002	0.0201	0.0201
Seismic (Reduced DL) 180 deg M2	37.00	0.002	0.0001	0.0044	0.0044
Seismic (Reduced DL) 180 deg M2	99.33	0.005	0.0000	0.0066	0.0066
Seismic (Reduced DL) 180 deg M2	123.00	0.007	0.0000	0.0069	0.0069
Seismic (Reduced DL) 180 deg M2	125.33	0.007	0.0000	0.0086	0.0086
Seismic (Reduced DL) 180 deg M2	143.00	0.010	0.0000	0.0101	0.0101
Seismic (Reduced DL) 180 deg M2	152.33	0.011	0.0000	0.0120	0.0120
Seismic (Reduced DL) 180 deg M2	167.67	0.015	0.0000	0.0168	0.0168
Seismic (Reduced DL) 180 deg M2	170.00	0.015	0.0000	0.0182	0.0182
Seismic (Reduced DL) 180 deg M2	187.67	0.022	-0.0001	0.0259	0.0259
Seismic (Reduced DL) 180 deg M2	190.00	0.023	-0.0001	0.0266	0.0266
Seismic (Reduced DL) 180 deg M2	206.50	0.032	-0.0001	0.0356	0.0356
Seismic (Reduced DL) 180 deg M2	215.00	0.037	-0.0001	0.0430	0.0430
Seismic (Reduced DL) 180 deg M2	230.08	0.054	-0.0001	0.0593	0.0593
Seismic (Reduced DL) 180 deg M2	239.58	0.063	-0.0001	0.0595	0.0595
Seismic (Reduced DL) 180 deg M2	259.67	0.082	-0.0001	0.0423	0.0423
Seismic (Reduced DL) 180 deg M2	270.00	0.089	-0.0001	0.0464	0.0464
Seismic (Reduced DL) 180 deg M2	272.17	0.090	-0.0001	0.0546	0.0546
Seismic (Reduced DL) 210 deg M1	37.00	0.002	0.0002	0.0058	0.0058
Seismic (Reduced DL) 210 deg M1	99.33	0.011	0.0000	0.0153	0.0153
Seismic (Reduced DL) 210 deg M1	123.00	0.018	0.0001	0.0177	0.0177
Seismic (Reduced DL) 210 deg M1	125.33	0.019	0.0001	0.0208	0.0208
Seismic (Reduced DL) 210 deg M1	143.00	0.025	0.0001	0.0181	0.0182
Seismic (Reduced DL) 210 deg M1	152.33	0.027	0.0002	0.0175	0.0175
Seismic (Reduced DL) 210 deg M1	167.67	0.031	0.0002	0.0183	0.0185
Seismic (Reduced DL) 210 deg M1	170.00	0.032	0.0002	0.0185	0.0186
Seismic (Reduced DL) 210 deg M1	187.67	0.038	0.0002	0.0164	0.0165
Seismic (Reduced DL) 210 deg M1	190.00	0.038	0.0002	0.0151	0.0151
Seismic (Reduced DL) 210 deg M1	206.50	0.042	0.0003	0.0122	0.0124
Seismic (Reduced DL) 210 deg M1	215.00	0.043	0.0003	0.0177	0.0179
Seismic (Reduced DL) 210 deg M1	230.08	0.051	0.0003	0.0228	0.0228
Seismic (Reduced DL) 210 deg M1	239.58	0.054	0.0003	0.0199	0.0200
Seismic (Reduced DL) 210 deg M1	259.67	0.059	0.0004	0.0047	0.0054
Seismic (Reduced DL) 210 deg M1	270.00	0.059	0.0004	0.0078	0.0078
Seismic (Reduced DL) 210 deg M1	272.17	0.059	0.0004	0.0201	0.0201

Reviewed for Code Compliance
Inspections Division
Approved with Conditions
Date: 11/27/17

Seismic (Reduced DL) 210 deg M2	37.00	0.002	0.0002	0.0042	0.0042
Seismic (Reduced DL) 210 deg M2	99.33	0.005	0.0002	0.0066	0.0066
Seismic (Reduced DL) 210 deg M2	123.00	0.007	0.0002	0.0074	0.0074
Seismic (Reduced DL) 210 deg M2	125.33	0.007	0.0002	0.0085	0.0085
Seismic (Reduced DL) 210 deg M2	143.00	0.010	0.0002	0.0108	0.0108
Seismic (Reduced DL) 210 deg M2	152.33	0.011	0.0002	0.0121	0.0121
Seismic (Reduced DL) 210 deg M2	167.67	0.015	0.0002	0.0175	0.0175
Seismic (Reduced DL) 210 deg M2	170.00	0.015	0.0003	0.0186	0.0186
Seismic (Reduced DL) 210 deg M2	187.67	0.022	0.0003	0.0268	0.0268
Seismic (Reduced DL) 210 deg M2	190.00	0.023	0.0003	0.0272	0.0272
Seismic (Reduced DL) 210 deg M2	206.50	0.032	0.0003	0.0364	0.0364
Seismic (Reduced DL) 210 deg M2	215.00	0.038	0.0003	0.0470	0.0470
Seismic (Reduced DL) 210 deg M2	230.08	0.055	0.0003	0.0601	0.0601
Seismic (Reduced DL) 210 deg M2	239.58	0.064	0.0003	0.0612	0.0612
Seismic (Reduced DL) 210 deg M2	259.67	0.084	0.0003	0.0438	0.0438
Seismic (Reduced DL) 210 deg M2	270.00	0.091	0.0003	0.0490	0.0490
Seismic (Reduced DL) 210 deg M2	272.17	0.092	0.0003	0.0537	0.0537
Seismic (Reduced DL) 240 deg M1	37.00	0.002	0.0003	0.0054	0.0054
Seismic (Reduced DL) 240 deg M1	99.33	0.011	0.0003	0.0141	0.0141
Seismic (Reduced DL) 240 deg M1	123.00	0.018	0.0003	0.0180	0.0180
Seismic (Reduced DL) 240 deg M1	125.33	0.019	0.0003	0.0202	0.0202
Seismic (Reduced DL) 240 deg M1	143.00	0.025	0.0003	0.0185	0.0185
Seismic (Reduced DL) 240 deg M1	152.33	0.028	0.0003	0.0173	0.0173
Seismic (Reduced DL) 240 deg M1	167.67	0.032	0.0003	0.0187	0.0187
Seismic (Reduced DL) 240 deg M1	170.00	0.032	0.0003	0.0188	0.0188
Seismic (Reduced DL) 240 deg M1	187.67	0.038	0.0003	0.0166	0.0166
Seismic (Reduced DL) 240 deg M1	190.00	0.039	0.0003	0.0153	0.0153
Seismic (Reduced DL) 240 deg M1	206.50	0.042	0.0003	0.0121	0.0121
Seismic (Reduced DL) 240 deg M1	215.00	0.044	0.0003	0.0193	0.0193
Seismic (Reduced DL) 240 deg M1	230.08	0.051	0.0002	0.0224	0.0224
Seismic (Reduced DL) 240 deg M1	239.58	0.055	0.0002	0.0202	0.0202
Seismic (Reduced DL) 240 deg M1	259.67	0.059	0.0002	0.0049	0.0049
Seismic (Reduced DL) 240 deg M1	270.00	0.060	0.0002	0.0080	0.0080
Seismic (Reduced DL) 240 deg M1	272.17	0.060	0.0002	0.0200	0.0200
Seismic (Reduced DL) 240 deg M2	37.00	0.002	0.0003	0.0038	0.0038
Seismic (Reduced DL) 240 deg M2	99.33	0.005	0.0005	0.0065	0.0065
Seismic (Reduced DL) 240 deg M2	123.00	0.007	0.0006	0.0076	0.0076
Seismic (Reduced DL) 240 deg M2	125.33	0.007	0.0006	0.0080	0.0080
Seismic (Reduced DL) 240 deg M2	143.00	0.010	0.0007	0.0112	0.0112
Seismic (Reduced DL) 240 deg M2	152.33	0.012	0.0007	0.0119	0.0119
Seismic (Reduced DL) 240 deg M2	167.67	0.015	0.0007	0.0180	0.0180
Seismic (Reduced DL) 240 deg M2	170.00	0.016	0.0007	0.0190	0.0190
Seismic (Reduced DL) 240 deg M2	187.67	0.023	0.0008	0.0274	0.0274
Seismic (Reduced DL) 240 deg M2	190.00	0.024	0.0008	0.0277	0.0277
Seismic (Reduced DL) 240 deg M2	206.50	0.033	0.0008	0.0371	0.0371
Seismic (Reduced DL) 240 deg M2	215.00	0.038	0.0008	0.0497	0.0497
Seismic (Reduced DL) 240 deg M2	230.08	0.056	0.0009	0.0605	0.0605
Seismic (Reduced DL) 240 deg M2	239.58	0.065	0.0010	0.0626	0.0626
Seismic (Reduced DL) 240 deg M2	259.67	0.085	0.0010	0.0450	0.0450
Seismic (Reduced DL) 240 deg M2	270.00	0.093	0.0010	0.0502	0.0502
Seismic (Reduced DL) 240 deg M2	272.17	0.094	0.0010	0.0495	0.0495
Seismic (Reduced DL) 300 deg M1	37.00	0.002	0.0003	0.0060	0.0060
Seismic (Reduced DL) 300 deg M1	99.33	0.011	0.0003	0.0156	0.0156
Seismic (Reduced DL) 300 deg M1	123.00	0.018	0.0003	0.0171	0.0171
Seismic (Reduced DL) 300 deg M1	125.33	0.018	0.0003	0.0208	0.0208
Seismic (Reduced DL) 300 deg M1	143.00	0.024	0.0003	0.0175	0.0175
Seismic (Reduced DL) 300 deg M1	152.33	0.027	0.0003	0.0174	0.0174
Seismic (Reduced DL) 300 deg M1	167.67	0.031	0.0003	0.0178	0.0178
Seismic (Reduced DL) 300 deg M1	170.00	0.032	0.0003	0.0181	0.0181
Seismic (Reduced DL) 300 deg M1	187.67	0.037	0.0003	0.0159	0.0159
Seismic (Reduced DL) 300 deg M1	190.00	0.038	0.0003	0.0149	0.0149
Seismic (Reduced DL) 300 deg M1	206.50	0.041	0.0003	0.0119	0.0119

Reviewed for Code Compliance
Inspections Division
Approved with Conditions
Date: 11/27/17

Seismic (Reduced DL) 300 deg M1	215.00	0.043	0.0003	0.0140	0.0140
Seismic (Reduced DL) 300 deg M1	230.08	0.050	0.0003	0.0228	0.0228
Seismic (Reduced DL) 300 deg M1	239.58	0.053	0.0003	0.0193	0.0193
Seismic (Reduced DL) 300 deg M1	259.67	0.058	0.0003	0.0044	0.0044
Seismic (Reduced DL) 300 deg M1	270.00	0.058	0.0003	0.0070	0.0070
Seismic (Reduced DL) 300 deg M1	272.17	0.058	0.0003	0.0201	0.0201
Seismic (Reduced DL) 300 deg M2	37.00	0.002	0.0002	0.0044	0.0044
Seismic (Reduced DL) 300 deg M2	99.33	0.005	0.0003	0.0066	0.0066
Seismic (Reduced DL) 300 deg M2	123.00	0.007	0.0003	0.0069	0.0069
Seismic (Reduced DL) 300 deg M2	125.33	0.007	0.0003	0.0086	0.0086
Seismic (Reduced DL) 300 deg M2	143.00	0.010	0.0003	0.0101	0.0102
Seismic (Reduced DL) 300 deg M2	152.33	0.011	0.0003	0.0120	0.0120
Seismic (Reduced DL) 300 deg M2	167.67	0.015	0.0003	0.0168	0.0168
Seismic (Reduced DL) 300 deg M2	170.00	0.015	0.0003	0.0182	0.0182
Seismic (Reduced DL) 300 deg M2	187.67	0.022	0.0003	0.0259	0.0259
Seismic (Reduced DL) 300 deg M2	190.00	0.023	0.0003	0.0266	0.0266
Seismic (Reduced DL) 300 deg M2	206.50	0.032	0.0003	0.0356	0.0356
Seismic (Reduced DL) 300 deg M2	215.00	0.037	0.0003	0.0430	0.0430
Seismic (Reduced DL) 300 deg M2	230.08	0.054	0.0004	0.0593	0.0593
Seismic (Reduced DL) 300 deg M2	239.58	0.063	0.0004	0.0595	0.0595
Seismic (Reduced DL) 300 deg M2	259.67	0.082	0.0004	0.0423	0.0423
Seismic (Reduced DL) 300 deg M2	270.00	0.089	0.0004	0.0464	0.0464
Seismic (Reduced DL) 300 deg M2	272.17	0.090	0.0004	0.0546	0.0546
Seismic (Reduced DL) 330 deg M1	37.00	0.002	0.0002	0.0058	0.0058
Seismic (Reduced DL) 330 deg M1	99.33	0.011	-0.0002	0.0153	0.0153
Seismic (Reduced DL) 330 deg M1	123.00	0.018	-0.0002	0.0177	0.0177
Seismic (Reduced DL) 330 deg M1	125.33	0.019	-0.0002	0.0208	0.0208
Seismic (Reduced DL) 330 deg M1	143.00	0.025	-0.0003	0.0181	0.0181
Seismic (Reduced DL) 330 deg M1	152.33	0.027	-0.0003	0.0175	0.0175
Seismic (Reduced DL) 330 deg M1	167.67	0.031	-0.0003	0.0183	0.0183
Seismic (Reduced DL) 330 deg M1	170.00	0.032	-0.0003	0.0185	0.0185
Seismic (Reduced DL) 330 deg M1	187.67	0.038	-0.0003	0.0164	0.0164
Seismic (Reduced DL) 330 deg M1	190.00	0.038	-0.0003	0.0151	0.0151
Seismic (Reduced DL) 330 deg M1	206.50	0.042	-0.0003	0.0122	0.0122
Seismic (Reduced DL) 330 deg M1	215.00	0.043	-0.0003	0.0177	0.0177
Seismic (Reduced DL) 330 deg M1	230.08	0.051	-0.0003	0.0228	0.0228
Seismic (Reduced DL) 330 deg M1	239.58	0.054	-0.0003	0.0199	0.0199
Seismic (Reduced DL) 330 deg M1	259.67	0.059	-0.0003	0.0047	0.0047
Seismic (Reduced DL) 330 deg M1	270.00	0.059	-0.0003	0.0078	0.0078
Seismic (Reduced DL) 330 deg M1	272.17	0.059	-0.0003	0.0201	0.0201
Seismic (Reduced DL) 330 deg M2	37.00	0.002	0.0002	0.0042	0.0042
Seismic (Reduced DL) 330 deg M2	99.33	0.005	0.0002	0.0066	0.0066
Seismic (Reduced DL) 330 deg M2	123.00	0.007	0.0002	0.0074	0.0074
Seismic (Reduced DL) 330 deg M2	125.33	0.007	0.0002	0.0085	0.0085
Seismic (Reduced DL) 330 deg M2	143.00	0.010	0.0002	0.0108	0.0108
Seismic (Reduced DL) 330 deg M2	152.33	0.011	0.0002	0.0121	0.0121
Seismic (Reduced DL) 330 deg M2	167.67	0.015	0.0002	0.0175	0.0175
Seismic (Reduced DL) 330 deg M2	170.00	0.015	0.0002	0.0186	0.0186
Seismic (Reduced DL) 330 deg M2	187.67	0.022	0.0002	0.0268	0.0268
Seismic (Reduced DL) 330 deg M2	190.00	0.023	0.0002	0.0272	0.0272
Seismic (Reduced DL) 330 deg M2	206.50	0.032	0.0002	0.0364	0.0364
Seismic (Reduced DL) 330 deg M2	215.00	0.038	0.0003	0.0470	0.0470
Seismic (Reduced DL) 330 deg M2	230.08	0.055	0.0003	0.0601	0.0601
Seismic (Reduced DL) 330 deg M2	239.58	0.064	0.0003	0.0612	0.0612
Seismic (Reduced DL) 330 deg M2	259.67	0.084	0.0003	0.0438	0.0438
Seismic (Reduced DL) 330 deg M2	270.00	0.091	0.0003	0.0490	0.0490
Seismic (Reduced DL) 330 deg M2	272.17	0.092	0.0003	0.0537	0.0537
Serviceability - 60 mph Wind Normal	37.00	0.027	0.0028	0.0388	0.0389
Serviceability - 60 mph Wind Normal	99.33	0.070	0.0027	0.0214	0.0216
Serviceability - 60 mph Wind Normal	123.00	0.089	0.0027	0.0385	0.0385
Serviceability - 60 mph Wind Normal	125.33	0.091	0.0027	0.0557	0.0557
Serviceability - 60 mph Wind Normal	143.00	0.104	0.0027	0.0302	0.0302

Reviewed for Code Compliance
Inspections Division
Approved with Conditions
Date: 11/27/17

Serviceability - 60 mph Wind Normal	152.33	0.108	0.0027	0.0215	0.0217
Serviceability - 60 mph Wind Normal	167.67	0.112	0.0026	0.0279	0.0279
Serviceability - 60 mph Wind Normal	170.00	0.112	0.0026	0.0204	0.0206
Serviceability - 60 mph Wind Normal	187.67	0.117	0.0026	0.0047	0.0049
Serviceability - 60 mph Wind Normal	190.00	0.117	0.0026	0.0074	0.0074
Serviceability - 60 mph Wind Normal	206.50	0.115	0.0026	0.0097	0.0097
Serviceability - 60 mph Wind Normal	215.00	0.113	0.0026	0.0116	0.0119
Serviceability - 60 mph Wind Normal	230.08	0.125	0.0027	0.0262	0.0263
Serviceability - 60 mph Wind Normal	239.58	0.128	0.0027	0.0216	0.0216
Serviceability - 60 mph Wind Normal	259.67	0.131	0.0028	0.0207	0.0209
Serviceability - 60 mph Wind Normal	270.00	0.125	0.0027	0.0234	0.0234
Serviceability - 60 mph Wind Normal	272.17	0.123	0.0027	0.0519	0.0519
Serviceability - 60 mph Wind 60 deg	37.00	0.026	0.0046	0.0392	0.0392
Serviceability - 60 mph Wind 60 deg	99.33	0.070	0.0074	0.0262	0.0266
Serviceability - 60 mph Wind 60 deg	123.00	0.092	0.0085	0.0508	0.0514
Serviceability - 60 mph Wind 60 deg	125.33	0.094	0.0086	0.0598	0.0601
Serviceability - 60 mph Wind 60 deg	143.00	0.111	0.0090	0.0438	0.0447
Serviceability - 60 mph Wind 60 deg	152.33	0.117	0.0093	0.0385	0.0391
Serviceability - 60 mph Wind 60 deg	167.67	0.125	0.0096	0.0365	0.0371
Serviceability - 60 mph Wind 60 deg	170.00	0.127	0.0097	0.0379	0.0391
Serviceability - 60 mph Wind 60 deg	187.67	0.138	0.0098	0.0285	0.0300
Serviceability - 60 mph Wind 60 deg	190.00	0.139	0.0098	0.0224	0.0236
Serviceability - 60 mph Wind 60 deg	206.50	0.143	0.0097	0.0149	0.0172
Serviceability - 60 mph Wind 60 deg	215.00	0.145	0.0097	0.0253	0.0263
Serviceability - 60 mph Wind 60 deg	230.08	0.163	0.0099	0.0504	0.0509
Serviceability - 60 mph Wind 60 deg	239.58	0.170	0.0099	0.0429	0.0441
Serviceability - 60 mph Wind 60 deg	259.67	0.180	0.0100	0.0016	0.0101
Serviceability - 60 mph Wind 60 deg	270.00	0.177	0.0099	0.0037	0.0105
Serviceability - 60 mph Wind 60 deg	272.17	0.177	0.0099	0.0273	0.0288
Serviceability - 60 mph Wind 90 deg	37.00	0.026	0.0245	0.0391	0.0462
Serviceability - 60 mph Wind 90 deg	99.33	0.071	0.0247	0.0247	0.0350
Serviceability - 60 mph Wind 90 deg	123.00	0.091	0.0248	0.0472	0.0529
Serviceability - 60 mph Wind 90 deg	125.33	0.094	0.0249	0.0517	0.0574
Serviceability - 60 mph Wind 90 deg	143.00	0.108	0.0249	0.0381	0.0454
Serviceability - 60 mph Wind 90 deg	152.33	0.114	0.0249	0.0318	0.0404
Serviceability - 60 mph Wind 90 deg	167.67	0.120	0.0250	0.0251	0.0353
Serviceability - 60 mph Wind 90 deg	170.00	0.121	0.0250	0.0293	0.0381
Serviceability - 60 mph Wind 90 deg	187.67	0.130	0.0250	0.0211	0.0324
Serviceability - 60 mph Wind 90 deg	190.00	0.130	0.0249	0.0130	0.0282
Serviceability - 60 mph Wind 90 deg	206.50	0.132	0.0248	0.0117	0.0274
Serviceability - 60 mph Wind 90 deg	215.00	0.132	0.0248	0.0196	0.0317
Serviceability - 60 mph Wind 90 deg	230.08	0.147	0.0248	0.0408	0.0478
Serviceability - 60 mph Wind 90 deg	239.58	0.153	0.0248	0.0342	0.0421
Serviceability - 60 mph Wind 90 deg	259.67	0.159	0.0248	0.0143	0.0286
Serviceability - 60 mph Wind 90 deg	270.00	0.155	0.0248	0.0171	0.0298
Serviceability - 60 mph Wind 90 deg	272.17	0.154	0.0248	0.0439	0.0502
Serviceability - 60 mph Wind 120 deg	37.00	0.027	-0.0039	0.0389	0.0391
Serviceability - 60 mph Wind 120 deg	99.33	0.071	-0.0055	0.0215	0.0222
Serviceability - 60 mph Wind 120 deg	123.00	0.090	-0.0061	0.0401	0.0403
Serviceability - 60 mph Wind 120 deg	125.33	0.091	-0.0062	0.0469	0.0473
Serviceability - 60 mph Wind 120 deg	143.00	0.104	-0.0064	0.0298	0.0300
Serviceability - 60 mph Wind 120 deg	152.33	0.108	-0.0064	0.0211	0.0221
Serviceability - 60 mph Wind 120 deg	167.67	0.111	-0.0066	0.0187	0.0191
Serviceability - 60 mph Wind 120 deg	170.00	0.112	-0.0066	0.0178	0.0188
Serviceability - 60 mph Wind 120 deg	187.67	0.117	-0.0066	0.0062	0.0088
Serviceability - 60 mph Wind 120 deg	190.00	0.117	-0.0066	0.0053	0.0084
Serviceability - 60 mph Wind 120 deg	206.50	0.115	-0.0065	0.0097	0.0111
Serviceability - 60 mph Wind 120 deg	215.00	0.113	-0.0065	0.0115	0.0132
Serviceability - 60 mph Wind 120 deg	230.08	0.125	-0.0066	0.0264	0.0271
Serviceability - 60 mph Wind 120 deg	239.58	0.128	-0.0066	0.0218	0.0222
Serviceability - 60 mph Wind 120 deg	259.67	0.131	-0.0066	0.0204	0.0215
Serviceability - 60 mph Wind 120 deg	270.00	0.125	-0.0066	0.0231	0.0234

Reviewed for Code Compliance
Inspections Division
Approved with Conditions
Date: 11/27/17

Serviceability - 60 mph Wind 120 deg	272.17	0.123	-0.0066	0.0516	0.0518
Serviceability - 60 mph Wind 180 deg	37.00	0.026	0.0027	0.0390	0.0390
Serviceability - 60 mph Wind 180 deg	99.33	0.070	0.0026	0.0261	0.0261
Serviceability - 60 mph Wind 180 deg	123.00	0.092	0.0027	0.0490	0.0491
Serviceability - 60 mph Wind 180 deg	125.33	0.094	0.0027	0.0683	0.0683
Serviceability - 60 mph Wind 180 deg	143.00	0.111	0.0027	0.0442	0.0442
Serviceability - 60 mph Wind 180 deg	152.33	0.117	0.0027	0.0389	0.0389
Serviceability - 60 mph Wind 180 deg	167.67	0.125	0.0026	0.0463	0.0463
Serviceability - 60 mph Wind 180 deg	170.00	0.127	0.0026	0.0406	0.0407
Serviceability - 60 mph Wind 180 deg	187.67	0.139	0.0027	0.0268	0.0269
Serviceability - 60 mph Wind 180 deg	190.00	0.140	0.0027	0.0297	0.0297
Serviceability - 60 mph Wind 180 deg	206.50	0.144	0.0026	0.0149	0.0149
Serviceability - 60 mph Wind 180 deg	215.00	0.145	0.0026	0.0252	0.0252
Serviceability - 60 mph Wind 180 deg	230.08	0.163	0.0028	0.0502	0.0502
Serviceability - 60 mph Wind 180 deg	239.58	0.170	0.0028	0.0427	0.0428
Serviceability - 60 mph Wind 180 deg	259.67	0.180	0.0028	0.0013	0.0031
Serviceability - 60 mph Wind 180 deg	270.00	0.178	0.0028	0.0034	0.0044
Serviceability - 60 mph Wind 180 deg	272.17	0.177	0.0028	0.0274	0.0276
Serviceability - 60 mph Wind 210 deg	37.00	0.026	0.0256	0.0390	0.0467
Serviceability - 60 mph Wind 210 deg	99.33	0.071	0.0275	0.0247	0.0370
Serviceability - 60 mph Wind 210 deg	123.00	0.091	0.0283	0.0454	0.0530
Serviceability - 60 mph Wind 210 deg	125.33	0.093	0.0283	0.0611	0.0673
Serviceability - 60 mph Wind 210 deg	143.00	0.108	0.0286	0.0385	0.0477
Serviceability - 60 mph Wind 210 deg	152.33	0.114	0.0287	0.0323	0.0432
Serviceability - 60 mph Wind 210 deg	167.67	0.120	0.0289	0.0371	0.0468
Serviceability - 60 mph Wind 210 deg	170.00	0.121	0.0289	0.0324	0.0429
Serviceability - 60 mph Wind 210 deg	187.67	0.130	0.0289	0.0192	0.0343
Serviceability - 60 mph Wind 210 deg	190.00	0.131	0.0289	0.0219	0.0362
Serviceability - 60 mph Wind 210 deg	206.50	0.132	0.0288	0.0117	0.0310
Serviceability - 60 mph Wind 210 deg	215.00	0.132	0.0288	0.0195	0.0348
Serviceability - 60 mph Wind 210 deg	230.08	0.147	0.0288	0.0406	0.0498
Serviceability - 60 mph Wind 210 deg	239.58	0.153	0.0288	0.0339	0.0441
Serviceability - 60 mph Wind 210 deg	259.67	0.160	0.0288	0.0144	0.0322
Serviceability - 60 mph Wind 210 deg	270.00	0.155	0.0287	0.0172	0.0330
Serviceability - 60 mph Wind 210 deg	272.17	0.154	0.0287	0.0441	0.0523
Serviceability - 60 mph Wind 240 deg	37.00	0.027	0.0039	0.0389	0.0391
Serviceability - 60 mph Wind 240 deg	99.33	0.071	0.0054	0.0215	0.0221
Serviceability - 60 mph Wind 240 deg	123.00	0.090	0.0061	0.0401	0.0403
Serviceability - 60 mph Wind 240 deg	125.33	0.091	0.0061	0.0469	0.0473
Serviceability - 60 mph Wind 240 deg	143.00	0.104	0.0063	0.0298	0.0300
Serviceability - 60 mph Wind 240 deg	152.33	0.108	0.0064	0.0211	0.0221
Serviceability - 60 mph Wind 240 deg	167.67	0.111	0.0065	0.0187	0.0191
Serviceability - 60 mph Wind 240 deg	170.00	0.112	0.0065	0.0178	0.0187
Serviceability - 60 mph Wind 240 deg	187.67	0.117	0.0065	0.0062	0.0087
Serviceability - 60 mph Wind 240 deg	190.00	0.117	0.0065	0.0053	0.0083
Serviceability - 60 mph Wind 240 deg	206.50	0.115	0.0064	0.0097	0.0110
Serviceability - 60 mph Wind 240 deg	215.00	0.113	0.0064	0.0115	0.0131
Serviceability - 60 mph Wind 240 deg	230.08	0.125	0.0065	0.0264	0.0271
Serviceability - 60 mph Wind 240 deg	239.58	0.128	0.0065	0.0218	0.0222
Serviceability - 60 mph Wind 240 deg	259.67	0.131	0.0065	0.0204	0.0214
Serviceability - 60 mph Wind 240 deg	270.00	0.125	0.0065	0.0231	0.0234
Serviceability - 60 mph Wind 240 deg	272.17	0.123	0.0065	0.0516	0.0518
Serviceability - 60 mph Wind 300 deg	37.00	0.026	0.0009	0.0392	0.0392
Serviceability - 60 mph Wind 300 deg	99.33	0.070	-0.0019	0.0262	0.0266
Serviceability - 60 mph Wind 300 deg	123.00	0.092	-0.0029	0.0508	0.0513
Serviceability - 60 mph Wind 300 deg	125.33	0.094	-0.0030	0.0598	0.0601
Serviceability - 60 mph Wind 300 deg	143.00	0.111	-0.0034	0.0438	0.0445
Serviceability - 60 mph Wind 300 deg	152.33	0.117	-0.0037	0.0385	0.0391
Serviceability - 60 mph Wind 300 deg	167.67	0.125	-0.0041	0.0365	0.0371
Serviceability - 60 mph Wind 300 deg	170.00	0.127	-0.0041	0.0379	0.0388
Serviceability - 60 mph Wind 300 deg	187.67	0.138	-0.0042	0.0285	0.0296
Serviceability - 60 mph Wind 300 deg	190.00	0.139	-0.0042	0.0224	0.0235

Reviewed for Code Compliance
Inspections Division
Approved with Conditions
Date: 11/27/17

Serviceability - 60 mph Wind 300 deg	206.50	0.143	-0.0042	0.0149	0.0165
Serviceability - 60 mph Wind 300 deg	215.00	0.145	-0.0042	0.0253	0.0262
Serviceability - 60 mph Wind 300 deg	230.08	0.163	-0.0040	0.0504	0.0508
Serviceability - 60 mph Wind 300 deg	239.58	0.170	-0.0040	0.0429	0.0438
Serviceability - 60 mph Wind 300 deg	259.67	0.180	-0.0039	0.0016	0.0086
Serviceability - 60 mph Wind 300 deg	270.00	0.177	-0.0040	0.0037	0.0091
Serviceability - 60 mph Wind 300 deg	272.17	0.177	-0.0040	0.0273	0.0283
Serviceability - 60 mph Wind 330 deg	37.00	0.026	0.0225	0.0390	0.0450
Serviceability - 60 mph Wind 330 deg	99.33	0.071	0.0197	0.0247	0.0315
Serviceability - 60 mph Wind 330 deg	123.00	0.091	0.0187	0.0456	0.0491
Serviceability - 60 mph Wind 330 deg	125.33	0.093	0.0186	0.0605	0.0633
Serviceability - 60 mph Wind 330 deg	143.00	0.108	0.0181	0.0385	0.0425
Serviceability - 60 mph Wind 330 deg	152.33	0.114	0.0179	0.0322	0.0368
Serviceability - 60 mph Wind 330 deg	167.67	0.120	0.0175	0.0348	0.0389
Serviceability - 60 mph Wind 330 deg	170.00	0.121	0.0175	0.0317	0.0358
Serviceability - 60 mph Wind 330 deg	187.67	0.130	0.0174	0.0201	0.0265
Serviceability - 60 mph Wind 330 deg	190.00	0.131	0.0173	0.0177	0.0247
Serviceability - 60 mph Wind 330 deg	206.50	0.132	0.0173	0.0117	0.0209
Serviceability - 60 mph Wind 330 deg	215.00	0.132	0.0172	0.0196	0.0261
Serviceability - 60 mph Wind 330 deg	230.08	0.147	0.0173	0.0407	0.0442
Serviceability - 60 mph Wind 330 deg	239.58	0.153	0.0173	0.0340	0.0382
Serviceability - 60 mph Wind 330 deg	259.67	0.160	0.0173	0.0146	0.0226
Serviceability - 60 mph Wind 330 deg	270.00	0.155	0.0173	0.0174	0.0245
Serviceability - 60 mph Wind 330 deg	272.17	0.154	0.0173	0.0442	0.0475

Site Name:	**Portland ME, ME**	*Program Last Updated:*	*5/13/2(*
Site Number:	**10047**	*American Tower Corporation*	
Engineering Number:	**OAA702064_C3_07**		
Engineer:	**Brendan M Smith**		
Date:	**06/21/17**		

Reviewed for Code Compliance
Inspections Division
Approved with Conditions
Date: 11/27/17

Design Base Loads (Factored) per TIA-222-G

Foundation Mapped:	N				
Moment (M_u):	0.0	k-ft	Concrete Compressive Strength (f'_c):	3000	psi
Shear/Leg (V_u):	0.6	k	Vertical Steel Rebar Size #:	6	
Compression/Leg (P_u):	355.8	k	Vertical Steel Rebar Area:	0.44	in^2
Uplift/Leg (T_u):	0.0	k	# of Vertical Steel Rebars:	8	
Tower Type (GT / SST):	GT		Vertical Steel Rebar Yield Strength (F_y):	60	ksi
Diameter of Prismatic Portion of Pier (d):	4.0	ft	Tie / Stirrup Size #:	4	
Depth to Base of Foundation:	4.0	ft	Tie / Stirrup Area:	0.20	in^2
Pier Height Above Ground (h):	0.50	ft	Tie / Stirrup Spacing:	18.0	in
Length / Width of Pad (w):	11.0	ft	Tie / Stirrup Steel Yield Strength (F_y):	60	ksi
Thickness of Pad (t):	1.5	ft	Rebar Cage Diameter:	40.0	in
Depth Below Ground Surface to Water Table (w):	99.0	ft	Bending/Tension Reduction Factor (ϕ_B):	0.90	
Unit Weight of Concrete:	150.0	pcf	Shear Reduction Factor (ϕ_V):	0.75	
Unit Weight of Water:	62.4	pcf	Compression Reduction Factor (ϕ_V):	0.65	
Unit Weight of Soil Above Water Table:	110.0	pcf	Steel Elastic Modulus:	29000	ksi
Unit Weight of Soil Below Water Table:	55.0	pcf	Pad Steel Rebar Size #:	8	
Friction Angle of Uplift from Top of Pad:	20	Degrees	Pad Steel Rebar Area:	0.79	in^2
Friction Angle of Uplift from Base of Pad:	20	Degrees	Pad Steel Rebar Yield Strength (F_y):	60	ksi
Uplift Angle Started at Top or Base of Pad (T/B):	T		# of Rebar in Top of Pad:	0	
Ultimate Skin Friction:	220	psf	# of Rebar in Base of Pad:	11	
Ultimate Compressive Bearing Pressure:	4500	psf	Pad Clear Cover:	3	in
Capacity Increase (Due to Transient Loads):	1.00				
Bearing Strength Reduction Factor (ϕ_s):	0.60				
Uplift Strength Reduction Factor (ϕ_s):	0.75				

Axial Capacities and Design Moment

Weight of Concrete (Bouyancy Considered):	32.9	k
Weight of Soil (Bouyancy Considered):	35.6	k
Ultimate Skin Friction Resistance:	14.5	k
Controlling Failure Mode (Top / Base):	Top	
Nominal Uplift Capacity per Leg ($\phi_s T_n$):	57.9	k
Nominal Compressive Capacity per Leg ($\phi_s P_n$):	326.7	k
P_u:	362.9	k
$T_u/\phi_s T_n$:	0.00	Result: OK
$P_u/\phi_s P_n$:	1.11	Result: NG

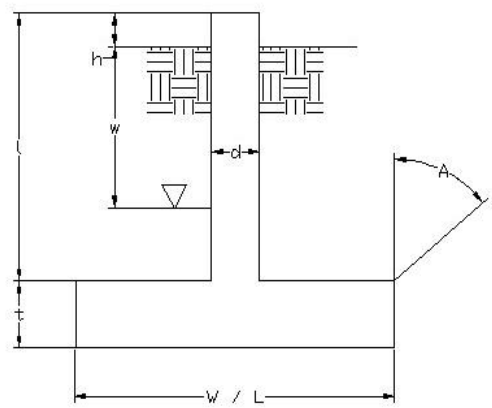

Depth (ft) Top	Depth (ft) Bottom	Ultimate Lateral Bearing Pressure (psf)	Increment (psf/ft)	γ_{Soil} (pcf)	Cohesion (psf)	ϕ (degree)
0.0	2.0	0.0	110.0	110	0	0
2.0	2.5	1020.0	110.0	110	400	0

Inflection Point (Below Ground Surface):	1.6	ft
Factored Design Moment At Inflection Point (M_u):	0.5	k-ft

Reviewed for Code Compliance
Inspections Division
Approved with Conditions
Date: 11/27/17

Pad Strength Capacity

β:	0.85	ACI318-05 - 10.2.7.3
Lower Pad Flexural Reinforcement Ratio:	0.0046	OK - Minimum Reinforcement Ratio Met - ACI10
Upper Pad Flexural Reinforcement Ratio:	0.0000	OK - Minimum Reinforcement Ratio Met - ACI10
Lower Pad Flexural Reinforcement Spacing:	13	in - Pad Reinforcing Spacing OK - ACI7.12.2.2 & 1
Upper Pad Flexural Reinforcement Spacing:	0	in - Pad Reinforcing Spacing OK - ACI7.12.2.2 & 10.5.4
One Way Design Shear (V_u):	75.2	k
One Way Shear Capacity (ϕV_c):	162.2	k - ACI318-05 - 11.3.1.1
V_u / ϕV_c:	0.46	Result: OK
Punching Design Shear (V_u):	288.0	k
Nominal Punching Shear Capacity ($\phi_c V_n$):	467.8	k - ACI318-05 - 11.12.2.1
V_u / ϕV_c:	0.62	Result: OK
Flexural Loading Due to Soil Pressure (M_u):	201.0	k-ft
Lower Steel Pad Moment Capacity (ϕM_n):	536.7	k-ft - ACI318-05 - 10.3
M_u / ϕM_n:	0.37	Result: OK
Flexural Loading Due to Uplift (M_u):	0.0	k-ft
Upper Steel Pad Moment Capacity (ϕM_n):	0.0	k-ft - ACI318-05 - 10.3
M_u / ϕM_n:	0.00	Result: OK

Pier Strength Capacity

Design Moment (M_u):	0.5	k-ft
Nominal Moment Capacity ($\phi_B M_n$):	315.5	k-ft - ACI318-005 - 10.2
$M_u/\phi_B M_n$:	0.00	Result: OK
Design Shear (V_u):	0.6	k
Nominal Shear Capacity ($\phi_V V_n$):	199.9	k - ACI318-05 - 11.3.1.1 or 11.5.7.2
$V_u/\phi_V V_n$:	0.00	Result: OK
Design Tension (T_u):	0.0	k
Nominal Tension Capacity ($\phi_T T_n$):	190.1	k - ACI318-05 - 10.2
$T_u/\phi_T T_n$:	0.00	Result: OK
Design Compression (P_u):	351.5	k
Nominal Compression Capacity ($\phi_P P_n$):	2394.8	k - ACI318-05 - 10.3.6.2
$P_u/\phi_P P_n$:	0.15	Result: OK
Pier Reinforcement Ratio:	0.002	Reinforcement Ratio under required values - ACI318-05 - 10.8.4
$M_u/\phi_B M_n + T_u/\phi_T T_n$:	0.00	Result: OK

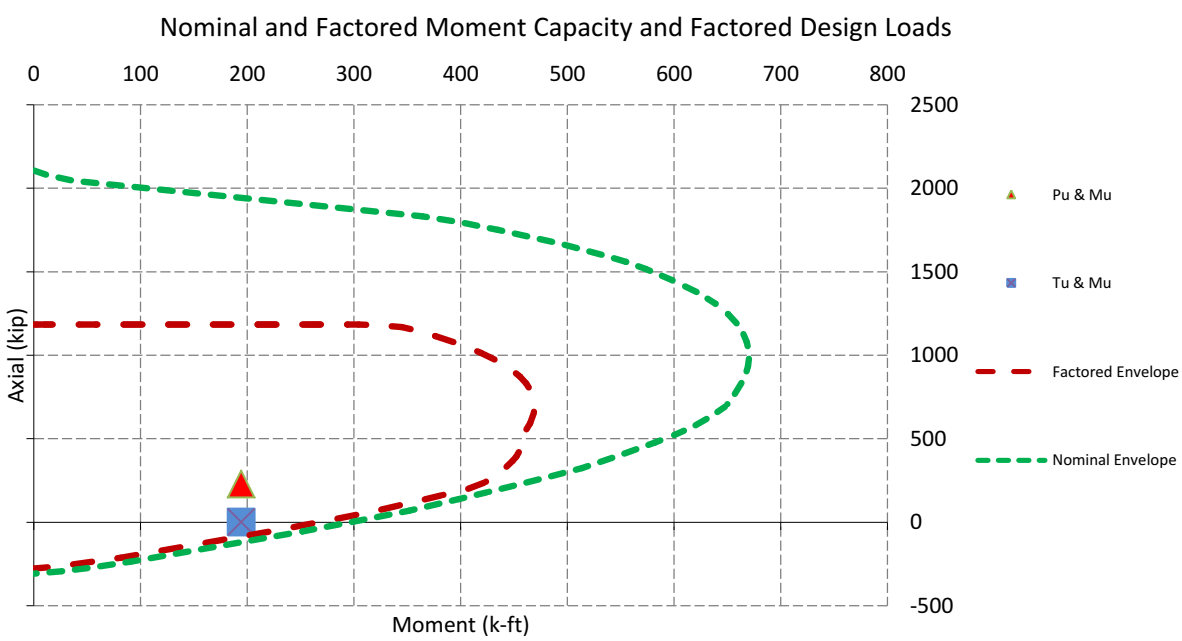

Site Name:	**Portland ME, ME**	*Program Last Updated:*	*5/13/*
Site Number:	**10047**	*American Tower Corporation*	
Engineering Number:	**OAA702064_C3_07**		
Engineer:	**Brendan M Smith**		
Date:	**06/21/17**		

Reviewed for Code Compliance
Inspections Division
Approved with Conditions
Date: 11/27/17

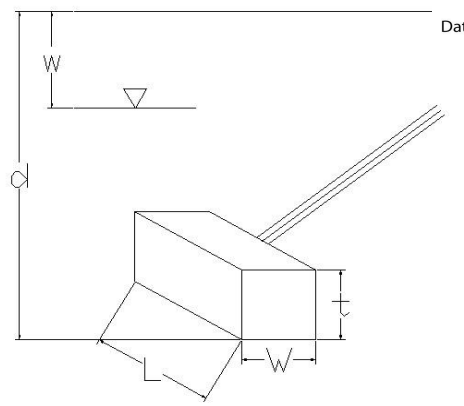

Design Standard per TIA-222-G

Anchor Radius:	115.0	ft
Uplift (Factored - P_u):	100.3	k
Shear (Factored - V_u):	65.8	k
Berm Present:	N	
Design Anchor Rod:	N	
Mapped Foundation:	N	
Anchor Base Depth (d):	12.5	ft
Width of Anchor (W):	12.0	ft
Length of Anchor (L):	12.0	ft
Thickness of Anchor (t):	3.0	ft
Depth Below Ground Surface to Water Table (w):	99.0	ft
Soil Uplift at Base / Top of Anchor (B/T):	T	
Unit Weight of Concrete:	150.0	pcf
Unit Weight of Soil Above Water Table:	110.0	pcf
Unit Weight of Water:	62.4	pcf
Submerged Soil Unit Weight:	55.0	pcf
Internal Angle of Friction:	10	Degrees
Cohesion:	0	psf
Ultimate Skin Friction of Pad Sides to Soil:	220	psf
Ultimate Coefficient of Shear Friction:	0.30	
Maximum Top Conical Failure Angle:	20	Degrees
Maximum Base Conical Failure Angle:	20	Degrees
Allowable Capacity Increase:	1.00	(Due to Transient Loads)
Uplift Strength Reduction Factor (ϕ_u):	0.75	
Shear Strength Reduction Factor (ϕ_v):	0.75	
Concrete Uplift Strength Reduction Factor (ϕ_u):	0.90	

Uplift

Weight of Concrete (Buoyancy Effect Considered):	64.8	k
Weight of Soil (Buoyancy Effect Considered):	250.3	k
Ultimate Uplift Resistance from Skin Friction:	23.8	k
Nominal Factored Uplift Resistance ($\phi_u P_n$):	246.0	k
P_u / $\phi_u P_n$:	0.40	Result: OK

Shear

Ultimate Shear Friction Resistance Due to Normal Force - Uplift:	42.7	k
Passive Pressure:	1719	psf
Ultimate Passure Pressure Resistance:	61.9	k
Nominal Shear Resistance ($\phi_v V_n$):	78.4	k
V_u / $\phi_v V_n$:	0.82	Result: OK

Strength Analysis of Reinforced Concrete

Reviewed for Code Compliance
Inspections Division
Approved with Conditions
Date: 11/27/17

Concrete Compressive Srength (f'_c):	3000	psi
Longitudinal Rebar Yield Strength:	60000	psi
# Longitudinal Rebar (Top):	10	
# Longitudinal Rebar (1 Side):	3	
Rebar Size:	5	
Strength Reduction Factor for Shear (ϕ_v):	0.75	
Strength Reduction Factor for Flexure (ϕ_b):	0.9	
Compression Zone Factor (β_1):	0.85	
Area of Single Rebar:	0.31	in^2
One Way Shear due to Shear Load (V_u):	0.9	k
Nominal One Way Shear Capacity for Shear Load ($\phi_c V_n$):	414.1	k
$V_u/\phi_v V_n$:	0.00	Result: OK
One Way Shear due to Uplift (V_u):	37.9	k
Nominal One Way Shear Capacity for Uplift ($\phi_c V_n$):	378.6	k
$V_u/\phi_v V_n$:	0.10	Result: OK
Pad Flexure due to Shear Load (M_u):	96.4	k-ft
Nominal Flexural Capacity for Shear Load ($\phi_b M_n$):	585.9	k-ft
Pad Flexure due to Uplift (M_u):	146.2	k-ft
Nominal Flexural Capacity for Uplift ($\phi_b M_n$):	446.3	k-ft
$M_u/\phi_b M_n$ (Max.):	0.33	Result: OK

Reviewed for Code Compliance
Inspections Division
Approved with Conditions
Date: 11/27/17

T-MOBILE NORTHEAST LLC

APPROVED
By Craig Gallagher at 2:04 pm, Sep 18, 2017

4DN2267B
ME267/DORLER TOWER (ATS)

220 RIVERSIDE INDUSTRIAL PARKWAY
PORTLAND, ME 04103

(6004G CONFIGURATION)

VICINITY MAP

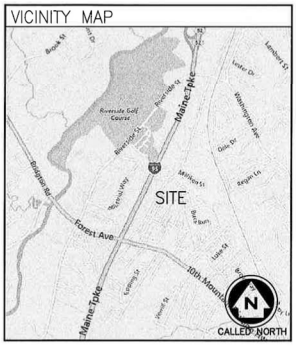

DO NOT SCALE DRAWINGS

CONTRACTOR SHALL VERIFY PLANS AND EXISTING DIMENSIONS AND CONDITIONS ON THE JOB SITE AND SHALL IMMEDIATELY NOTIFY THE ARCHITECT IN WRITING OF ANY DISCREPANCIES BEFORE PROCEEDING WITH THE WORK OR BE RESPONSIBLE FOR SAME.

811 Know what's below. Call before you dig.
TO OBTAIN LOCATION OF PARTICIPANTS UNDERGROUND FACILITIES BEFORE YOU DIG IN MAINE, CALL DIG SAFE
TOLL FREE: 1-888-344-7233 OR
www.digsafe.com
MAINE STATUTE REQUIRES MIN OF 2 WORKING DAYS NOTICE BEFORE YOU EXCAVATE

GENERAL NOTES

1. THE CONTRACTOR SHALL GIVE ALL NOTICES AND COMPLY WITH ALL LAWS, ORDINANCES, RULES, REGULATIONS AND LAWFUL ORDERS OF ANY PUBLIC AUTHORITY, MUNICIPAL AND UTILITY COMPANY SPECIFICATIONS, AND LOCAL AND STATE JURISDICTIONAL CODES BEARING ON THE PERFORMANCE OF THE WORK. THE WORK PERFORMED ON THE PROJECT AND THE MATERIALS INSTALLED SHALL BE IN STRICT ACCORDANCE WITH ALL APPLICABLE CODES, REGULATIONS AND ORDINANCES.
2. THE ARCHITECT/ENGINEER HAVE MADE EVERY EFFORT TO SET FORTH IN THE CONSTRUCTION AND CONSTRUCT DOCUMENTS THE COMPLETE SCOPE OF WORK. THE CONTRACTOR BIDDING THE JOB IS NEVERTHELESS CAUTIONED THAT MINOR OMISSIONS OR ERRORS IN THE DRAWINGS AND OR SPECIFICATIONS SHALL NOT EXCUSE SAID CONTRACTOR FROM COMPLETING THE PROJECT AND IMPROVEMENTS IN ACCORDANCE WITH THE INTENT OF THESE DOCUMENTS.
3. THE CONTRACTOR OR BIDDER SHALL BEAR THE RESPONSIBILITY OF NOTIFYING (IN WRITING) THE T–MOBILE REPRESENTATIVE OF ANY CONFLICTS, ERRORS, OR OMISSIONS PRIOR TO THE SUBMISSION OF THE CONTRACTOR'S PROPOSAL OR PERFORMANCE OF WORK. IN THE EVENT OF DISCREPANCIES, THE CONTRACTOR SHALL PRICE THE MORE COSTLY OR EXPENSIVE WORK, UNLESS DIRECTED IN WRITING OTHERWISE.
4. THE SCOPE OF WORK SHALL INCLUDE FURNISHING OF ALL MATERIALS, EQUIPMENT, LABOR AND ALL OTHER MATERIALS AND LABOR DEEMED NECESSARY TO COMPLETE THE WORK/PROJECT AS DESCRIBED HEREIN.
5. THE CONTRACTOR SHALL VISIT THE JOB SITE PRIOR TO THE SUBMISSION OF BIDS OR PERFORMING WORK TO FAMILIARIZE HIMSELF WITH THE FIELD CONDITIONS AND TO VERIFY THAT THE PROJECT CAN BE CONSTRUCTED IN ACCORDANCE WITH THE CONTRACT DOCUMENTS.
6. THE CONTRACTOR SHALL OBTAIN AUTHORIZATION TO PROCEED WITH CONSTRUCTION PRIOR TO STARTING WORK ON ANY ITEM NOT CLEARLY DEFINED BY THE CONSTRUCTION DRAWINGS/CONTRACT DOCUMENTS.
7. THE CONTRACTOR SHALL INSTALL ALL EQUIPMENT AND MATERIALS ACCORDING TO THE MANUFACTURER'S/VENDOR'S SPECIFICATIONS UNLESS NOTED OTHERWISE OR WHERE LOCAL CODES OR ORDINANCES TAKE PRECEDENCE.
8. THE CONTRACTOR SHALL PROVIDE A FULL SET OF CONSTRUCTION DOCUMENTS AT THE SITE UPDATED WITH THE LATEST REVISIONS AND ADDENDUM OR CLARIFICATIONS AVAILABLE FOR THE USE BY ALL PERSONNEL INVOLVED WITH THE PROJECT.
9. THE CONTRACTOR SHALL SUPERVISE AND DIRECT THE PROJECT DESCRIBED HEREIN. THE CONTRACTOR SHALL BE SOLELY RESPONSIBLE FOR ALL CONSTRUCTION MEANS, METHODS, TECHNIQUES, SEQUENCES, AND PROCEDURES AND FOR COORDINATING ALL PORTIONS OF THE WORK UNDER CONTRACT.
10. THE CONTRACTOR SHALL BE RESPONSIBLE FOR OBTAINING ANY PERMITS AND INSPECTIONS WHICH ARE REQUIRED FOR THE WORK BY THE ARCHITECT/ENGINEER, THE STATE, COUNTY, OR LOCAL GOVERNMENT AUTHORITY.
11. THE CONTRACTOR SHALL MAKE NECESSARY PROVISIONS TO PROTECT EXISTING IMPROVEMENTS, EASEMENTS, PAVING, CURBING, ETC., DURING CONSTRUCTION. UPON COMPLETION OF WORK, THE CONTRACTOR SHALL REPAIR ANY DAMAGE THAT MAY HAVE OCCURRED DUE TO CONSTRUCTION ON OR ABOUT THE PROPERTY.
12. THE CONTRACTOR SHALL KEEP THE GENERAL WORK AREA CLEAN AND HAZARD FREE DURING CONSTRUCTION AND DISPOSE OF ALL DIRT, DEBRIS, RUBBISH AND REMOVE EQUIPMENT NOT SPECIFIED AS REMAINING ON PROPERTY. PREMISES SHALL BE LEFT IN CLEAN CONDITION AND FREE FROM PAINT SPOTS, DUST, OR SMUDGES OF ANY NATURE.
13. THE CONTRACTOR SHALL COMPLY WITH ALL OSHA REQUIREMENTS, AS WELL AS THE LATEST EDITIONS OF ANY PERTINENT STATE SAFETY REGULATIONS.
14. THE CONTRACTOR SHALL NOTIFY THE T–MOBILE REPRESENTATIVE WHERE A CONFLICT OCCURS ON ANY OF THE CONTRACT DOCUMENTS. THE CONTRACTOR IS NOT TO ORDER MATERIAL OR CONSTRUCT ANY PORTION OF THE WORK THAT IS IN CONFLICT UNTIL CONFLICT IS RESOLVED BY THE T–MOBILE REPRESENTATIVE.
15. THE CONTRACTOR SHALL VERIFY ALL DIMENSIONS, ELEVATIONS, PROPERTY LINES, ETC., ON THE JOB.
16. THE CONTRACTOR SHALL RETURN ALL DISTURBED AREAS TO THEIR ORIGINAL CONDITION AT THE COMPLETION OF WORK.

PROJECT SUMMARY

SITE NUMBER:	4DN2267B	APPLICANT:	T–MOBILE NORTHEAST LLC 400 STREET RD BENSALEM, PA 19020
SITE NAME:	ME267/DORLER TOWER (ATS)		
SITE ADDRESS:	220 RIVERSIDE INDUSTRIAL PARKWAY PORTLAND, ME 04103	PROJECT MANAGER:	AMERICAN TOWER CORPORATION 116 HUNTINGTON AVENUE, 11TH FLOOR BOSTON, MA 02116
TOWER OWNER:	AMERICAN TOWER CORPORATION		
ATC SITE NUMBER:	10047		
LAT./LONG.:	N 43.701605700° / W 70.31068100°	CONTACT:	KATHLEEN BURKE 781–926–4636
CONSTRUCTION TYPE:	IIB		
USE GROUP:	U	ARCHITECT/ENGINEER:	INFINIGY ENGINEERING 1033 WATERVLIET SHAKER ROAD ALBANY, NY 12205
		CONTACT:	ALEX WELLER 518–690–0790

PROJECT DESCRIPTION

- ☐ EXISTING MONOPOLE
- ☐ EXISTING LATTICE TOWER
- ☒ EXISTING GUYED TOWER
- ☐ EXISTING WATER TANK
- ☐ EXISTING SMOKESTACK
- ☐ EXISTING FLAGPOLE
- ☐ EXISTING FORT WORTH
- ☒ EXISTING CABINET(S)
- ☐ EXISTING RBS 2106
- ☒ EXISTING RBS 3106
- ☒ EXISTING RBS 6201–OOE–V1
- ☐ SITE SUPPORT CABINET
- ☐ GPS
- ☒ OUTDOOR
- ☐ INDOOR
- ☐ EXISTING CONCRETE PAD
- ☐ EXISTING STEEL PLATFORM
- ☒ EXISTING PPC
- ☐ PANELBOARD

T–MOBILE NORTHEAST LLC PROPOSES THE MODIFICATION OF AN UNMANNED WIRELESS BROADBAND FACILITY. SWAPPING (3) EXISTING PANEL ANTENNAS FOR (3) PROPOSED PANEL ANTENNAS. SWAPPING (3) EXISTING TMAS FOR (3) PROPOSED TMAS. ADD (3) RRUS ADD AND REPLACE (6) ACU. ADD (3) 6x12 HYBRIFLEX CABLES. REUSE, GPS ANTENNA AND EXISTING EQUIPMENT CABINETS.

SHEET INDEX

SHEET	DESCRIPTION	REVISION
T–1	TITLE SHEET	0
C–1	SITE PLAN	0
C–2	EQUIPMENT PLAN & ELEVATION	0
C–3	ANTENNA ORIENTATION & RF SCHEDULE	0
C–4	EQUIPMENT SPECIFICATIONS	0
E–1	GROUNDING AND POWER DIAGRAMS	0
E–2	COAX/FIBER PLUMBING DIAGRAM	0
N–1	GENERAL AND ELECTRICAL NOTES	0

T-Mobile
T-MOBILE NORTHEAST LLC
400 STREET ROAD
BENSALEM, PA 19009

INFINIGY
1033 Watervliet Shaker Rd
Albany, NY 12205
Phone # (518) 690-0790
Fax # (518) 690-0793

SUBMITTALS

DATE	DESCRIPTION	REVISION
09/15/17	ISSUED FOR PERMIT	0

DCP'.	DATE	APP'D	REVISIONS
RFE			
RF MWL			
ZONING			
OPS			
CONSTR.			
SITE AC.			

PROJECT NO:	317-501
DRAWN BY:	MPS
CHECKED BY:	ASW

STATE OF MAINE
JOHN C. STEVENS
No. 12818
LICENSED
SEP 13 2017
PROFESSIONAL ENGINEER
NOT VALID WITHOUT SEAL

THIS DOCUMENT IS THE CREATION, DESIGN, PROPERTY AND COPYRIGHTED WORK OF T-MOBILE. ANY DUPLICATION OR USE WITHOUT EXPRESS WRITTEN CONSENT IS STRICTLY PROHIBITED.

NOTE: IF DRAWINGS ARE 22"x34", USE GRAPHICAL SCALE AND/OR 1/2 TIMES OF THE NOTED SCALE.

SITE NUMBER:
4DN2267B
SITE NAME:
ME267 / DORLER TOWER (ATS)
220 RIVERSIDE INDUSTRIAL PARKWAY
PORTLAND, ME 04103

SHEET TITLE
TITLE SHEET

SHEET NUMBER
T-1
SHEET 1 OF 8 SHEETS

Reviewed for Code Compliance
Inspections Division
Approved with Conditions
Date: 11/27/17

INFINIGY HAS NOT FIELD VERIFIED THE EXISTING T-MOBILE EQUIPMENT AT TIME OF ISSUANCE OF THE DRAWINGS. CONTRACTOR TO VERIFY PRIOR TO INSTALLATION.

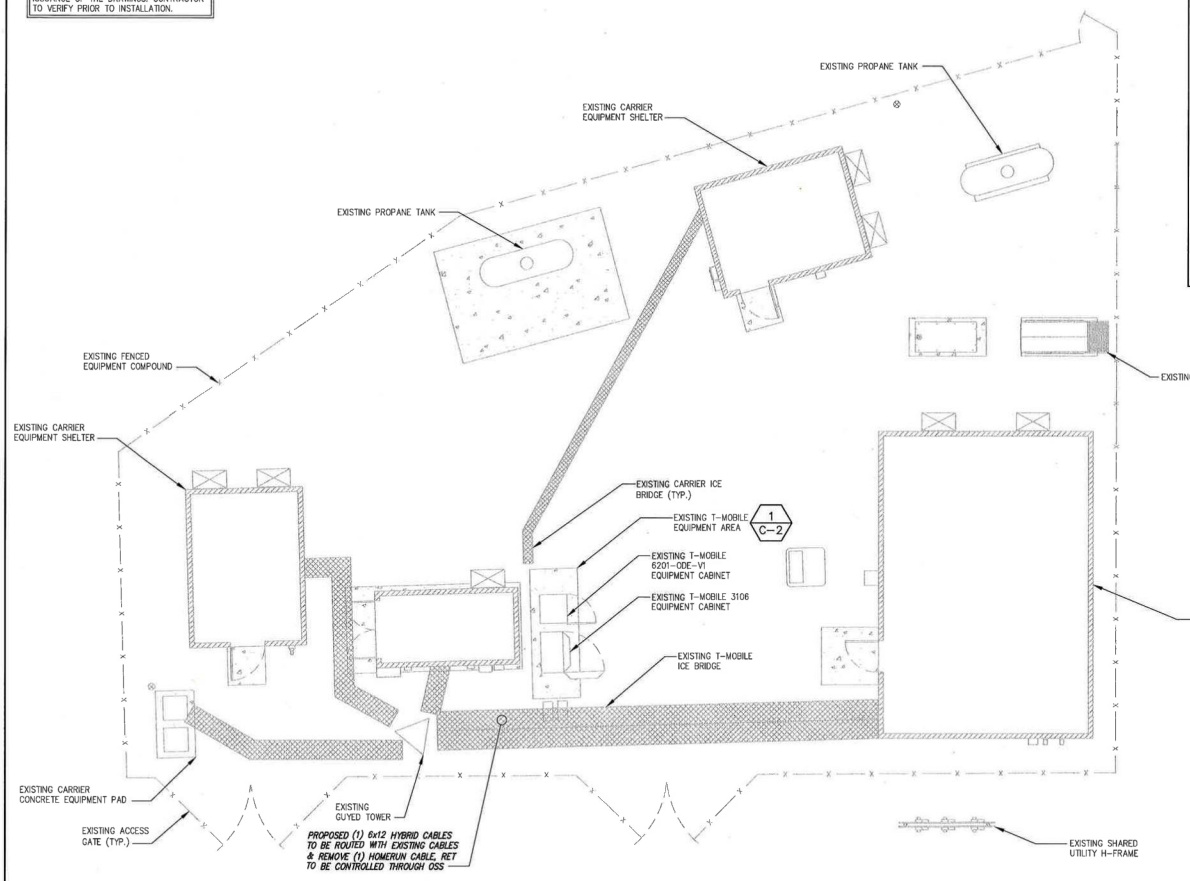

CALLED NORTH

1 COMPOUND PLAN
SCALE: AS NOTED

GENERAL SITE NOTES:

1. A COMPLETE BOUNDARY SURVEY OF THE HOST PARCEL HAS NOT BEEN PERFORMED BY INFINIGY. BOUNDARY INFORMATION IF SHOWN WAS OBTAINED FROM INFORMATION PROVIDED BY OTHERS. PROPERTY IS SUBJECT TO ALL EASEMENTS AND RESTRICTIONS OF RECORD.
2. BASEMAPPING INFORMATION BASED ON PROVIDED INFORMATION.
3. CONTRACTOR TO FIELD VERIFY DIMENSIONS AS NECESSARY BEFORE CONSTRUCTION.
4. THE PROPOSED DEVELOPMENT DOES NOT INCLUDE SIGNS OF ADVERTISING.
5. THE PROPOSED DEVELOPMENT IS UNMANNED AND THEREFORE DOES NOT REQUIRE A MEANS OF WATER SUPPLY OR SEWAGE DISPOSAL.
6. NO LANDSCAPING WORK IS PROPOSED IN CONJUNCTION WITH THIS DEVELOPMENT OTHER THAN THAT WHICH IS SHOWN.
7. THE PROPOSED DEVELOPMENT DOES NOT INCLUDE OUTDOOR STORAGE OR ANY SOLID WASTE RECEPTACLES.
8. UTILITIES SHOWN ON PLAN ARE TAKEN FROM OWNERS RECORDS AND FIELD LOCATION OF VISIBLE SURFACE FEATURES. THE EXISTENCE, EXTENT AND EXACT HORIZONTAL AND VERTICAL LOCATIONS OF UTILITIES HAS NOT BEEN VERIFIED. ANY CONTRACTOR PERFORMING WORK ON THIS SITE MUST CONTACT MISS UTILITY AT LEAST 48 HOURS PRIOR TO COMMENCING WORK.
9. ALL OBSOLETE OR UNUSED FACILITIES SHALL BE REMOVED WITHIN 12 MONTHS OF CESSATION OF OPERATIONS.

SITE LEGEND

	SITE PROPERTY LINE
	STREET OR ROAD
	CHAIN LINK FENCE
	OPAQUE WOODEN FENCE
	TREES/SHRUBS
	TREE LINE
	UTILITY POLE
(E)	EXISTING
(N)	NEW
(P)	PROPOSED
(F)	FUTURE

GRAPHIC SCALE

10' 5' 0 5' 10'

SCALE (11x17): 1" = 10'-0"
SCALE (22x34): 1" = 5'-0"

T-Mobile
T-MOBILE NORTHEAST LLC
400 STREET ROAD
BENSALEM, PA 19020

INFINIGY
1033 Watervliet Shaker Rd
Albany, NY 12205
Office # (518) 690-0790
Fax # (518) 690-0793

SUBMITTALS		
DATE	DESCRIPTION	REVISION
06/13/17	ISSUED FOR PERMIT	0

DEPT.	DATE	APP'D	REVISIONS
RFE			
RF MAN.			
ZONING			
OPS			
CONSTR.			
SITE ACQ.			

PROJECT NO:	317-501
DRAWN BY:	MPS
CHECKED BY:	ASW

STATE OF MAINE
JOHN W. STEVENS
No. 12818
LICENSED
PROFESSIONAL ENGINEER
13 2017

THIS DOCUMENT IS THE CREATION, DESIGN, PROPERTY AND COPYRIGHTED WORK OF T-MOBILE. ANY DUPLICATION OR USE WITHOUT EXPRESS WRITTEN CONSENT IS STRICTLY PROHIBITED.

NOTE: IF DRAWINGS ARE 22"x34", USE GRAPHICAL SCALE AND/OR 1/2 TIMES OF THE NOTED SCALE.

SITE NUMBER:
4DN2267B

SITE NAME:
ME267 / DORLER TOWER (ATS)

220 RIVERSIDE INDUSTRIAL PARKWAY
PORTLAND, ME 04103

SHEET TITLE
SITE PLAN

SHEET NUMBER
C-1
SHEET 2 OF 8 SHEETS

Reviewed for Code Compliance
Inspections Division
Approved with Conditions
Date: 11/27/17

INFINIGY HAS NOT FIELD VERIFIED THE EXISTING T-MOBILE EQUIPMENT AT TIME OF ISSUANCE OF THE DRAWINGS. CONTRACTOR TO VERIFY PRIOR TO INSTALLATION.

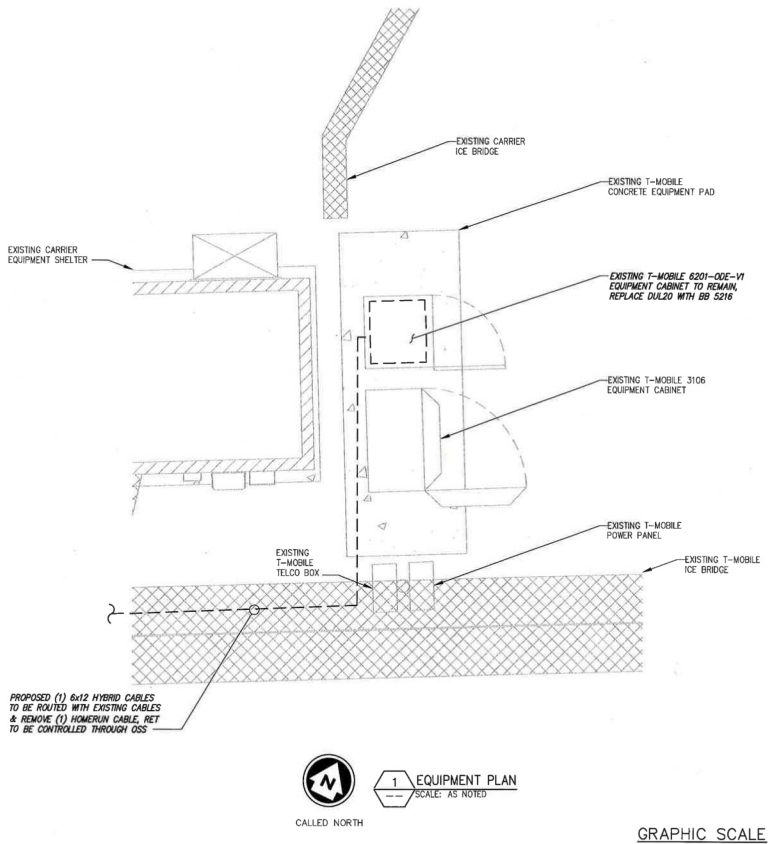

CALLED NORTH

1 EQUIPMENT PLAN
SCALE: AS NOTED

GRAPHIC SCALE
4' 2' 0 2' 4'
SCALE (11x17): 1" = 4'-0"
SCALE (22x34): 1" = 2'-0"

NOTE:
BASED ON THE MOUNT ANALYSIS COMPLETED BY INFINIGY DATED 08/24/17, THE EXISTING ANTENNA MOUNTS ARE CAPABLE OF SUPPORTING THE PROPOSED EQUIPMENT CONFIGURATION WITH THE FOLLOWING CONTINGENCY:

- INSTALL (1) SITE PRO STK-U STIFF ARM KIT AT MID-HEIGHT ON THE UN-BRACED END OF EACH SECTOR FRAME PRIOR TO THE INSTALLATION OF THE PROPOSED EQUIPMENT.

NOTE:
INFINIGY ENGINEERING HAS NOT EVALUATED THE TOWER OR MOUNT LOADING FOR THIS SITE, AND ASSUMES NO RESPONSIBILITY FOR ITS STRUCTURAL INTEGRITY REGARDING ITS EXISTING OR PROPOSED LOADING. FINAL INSTALLATION TO COMPLY WITH RESULTS OF PASSING STRUCTURAL ANALYSIS.

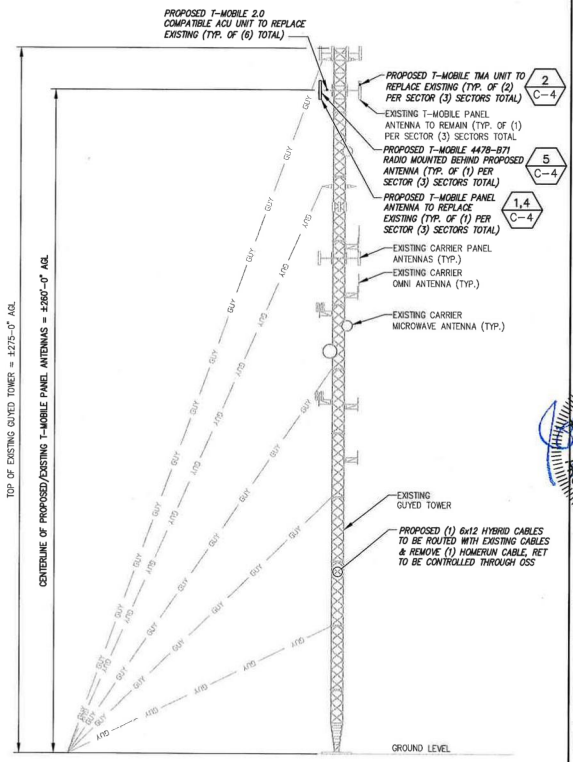

2 TOWER ELEVATION
NOT TO SCALE

T-Mobile
T-MOBILE NORTHEAST LLC
455 STREET ROAD
BERWALEN, PA 19020

INFINIGY
1033 Watervliet Shaker Rd
Albany, NY 12205
Office: (518) 690-0991
Fax # (518) 690-0793

SUBMITTALS

DATE	DESCRIPTION	REVISION
06/13/17	ISSUED FOR PERMIT	0

DEPT.	DATE	APP'D	REVISIONS
RFE			
RF MWV.			
ZONING			
GPS			
CONSTR.			
SITE ACQ.			

PROJECT NO: 317-501
DRAWN BY: MPS
CHECKED BY: ASW

STATE OF MAINE
JOHN STEVENS
No. 12818
SEP 13 2017
LICENSED
PROFESSIONAL ENGINEER
PROFESSIONAL SEAL

THIS DOCUMENT IS THE CREATION, DESIGN, PROPERTY AND COPYRIGHTED WORK OF T-MOBILE. ANY DUPLICATION OR USE WITHOUT EXPRESS WRITTEN CONSENT IS STRICTLY PROHIBITED.

NOTE: IF DRAWINGS ARE 22"x34", USE GRAPHICAL SCALE AND/OR 1/2 TIMES OF THE NOTED SCALE.

SITE NUMBER:
4DN2267B

SITE NAME:
ME267 / DORLER TOWER (ATS)

220 RIVERSIDE INDUSTRIAL PARKWAY
PORTLAND, ME 04103

SHEET TITLE
EQUIPMENT PLAN & ELEVATION

SHEET NUMBER
C-2

SHEET 3 OF 8 SHEETS

Reviewed for Code Compliance
Inspections Division
Approved with Conditions
Date: 11/27/17

INFINIGY HAS NOT FIELD VERIFIED THE EXISTING T-MOBILE EQUIPMENT AT TIME OF ISSUANCE OF THE DRAWINGS. CONTRACTOR TO VERIFY PRIOR TO INSTALLATION.

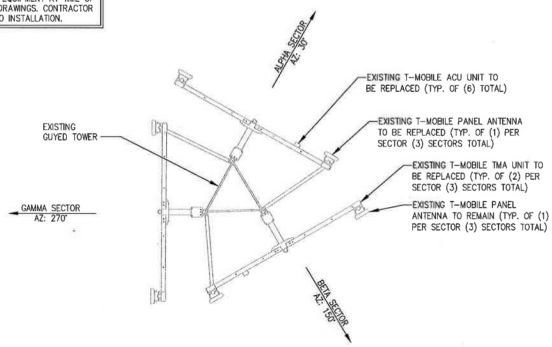

CALLED NORTH

1 ANTENNA ORIENTATION (EXISTING)
NOT TO SCALE

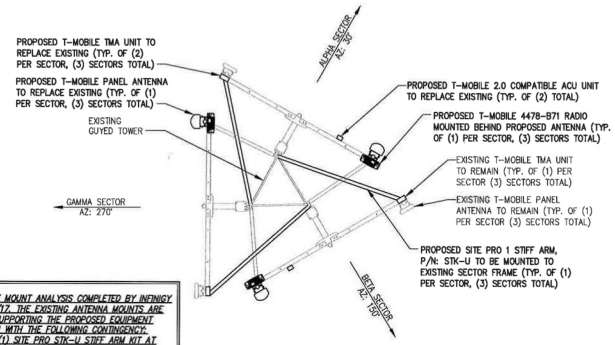

NOTE:
BASED ON THE MOUNT ANALYSIS COMPLETED BY INFINIGY DATED 08/24/17, THE EXISTING ANTENNA MOUNTS ARE CAPABLE OF SUPPORTING THE PROPOSED EQUIPMENT CONFIGURATION WITH THE FOLLOWING CONTINGENCY:

- INSTALL (1) SITE PRO STK-U STIFF ARM KIT AT MID-HEIGHT ON THE UN-BRACED END OF EACH SECTOR FRAME PRIOR TO THE INSTALLATION OF THE PROPOSED EQUIPMENT.

CALLED NORTH

2 ANTENNA ORIENTATION (PROPOSED)
NOT TO SCALE

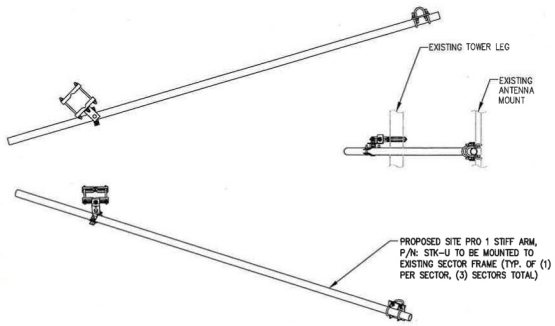

3 STIFF ARM DETAIL
NOT TO SCALE

4 DETAIL NOT USED
NOT TO SCALE

T-Mobile
T-MOBILE NORTHEAST LLC
400 STREET ROAD
SOUDERTON, PA 18955

INFINIGY
1053 Watervliet Shaker Rd
Albany, NY 12205
Office: (518) 690-0790
Fax # (518) 690-0793

SUBMITTALS

DATE	DESCRIPTION	REVISION
09/15/17	ISSUED FOR PERMIT	0

DEPT.	DATE	APP'D	REVISIONS
SITE			
RF MWL			
ZONING			
GPS			
CONSTR.			
SITE AC.			

PROJECT NO:	317-501
DRAWN BY:	MPS
CHECKED BY:	ASW

STATE OF MAINE
JOHN W. STEVENS
No. 12017
LICENSED
PROFESSIONAL ENGINEER
SEP 13 2017
PROFESSIONAL SEAL

THIS DOCUMENT IS THE CREATION, DESIGN, PROPERTY AND COPYRIGHTED WORK OF T-MOBILE. ANY DUPLICATION OR USE WITHOUT EXPRESS WRITTEN CONSENT IS STRICTLY PROHIBITED.

NOTE: IF DRAWINGS ARE 22"x34", USE GRAPHICAL SCALE AND/OR 1/2 TIMES OF THE NOTED SCALE.

SITE NUMBER:
4DN2267B

SITE NAME:
ME267 / DORLER TOWER (ATS)

220 RIVERSIDE INDUSTRIAL PARKWAY
PORTLAND, ME 04103

SHEET TITLE
ANTENNA ORIENTATION & RF SCHEDULE

SHEET NUMBER
C-3

SHEET 4 OF 8 SHEETS

Reviewed for Code Compliance
Inspections Division
Approved with Conditions
Date: 11/27/17

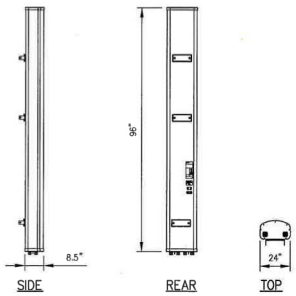

RFS MODEL NO.:	APXVAA24_43-U-A20
RADOME MATERIAL:	FIBERGLASS, UV RESISTANT
RADOME COLOR:	LIGHT GRAY
DIMENSIONS, HxWxD:	96"x24"x8.5"
WEIGHT, W/ PRE-MOUNTED BRACKETS:	46.0 LBS
CONNECTOR:	7-16 DIN FEMALE

1 ANTENNA DETAIL
NOT TO SCALE

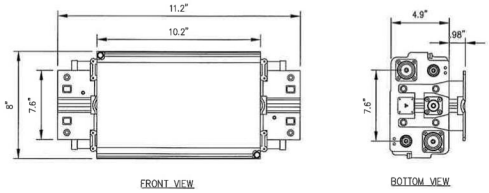

RFS MODEL NO.:	ATMS4P4DBP-1A20
COLOR:	GRAY
DIMENSIONS, HxWxD:	11.2"x8"x4.9"
WEIGHT:	15.85 LBS

2 TMA DETAIL
NOT TO SCALE

STRUCTURAL NOTES:

1. SPECIFICATIONS / CODES:
   - CONCRETE WORK SHALL BE PERFORMED IN ACCORDANCE WITH LATEST EDITION OF THE ACI CODE.
   - STEEL WORK SHALL BE PERFORMED IN ACCORDANCE WITH AISC STEEL CONSTRUCTION MANUAL, 9TH EDITION.
   - WELDING SHALL BE PERFORMED IN ACCORDANCE WITH AMERICAN WELDING SOCIETY (AWS) D1.1-92 "STRUCTURAL WELDING" CODE-STEEL.
   - REINFORCING STEEL SHALL BE PLACED IN ACCORDANCE WITH THE CONCRETE REINFORCING STEEL INSTITUTE (CRSI), "MANUAL OF STANDARD PRACTICE."
2. MATERIALS:
   - CONCRETE: fc' - 3000psi. (MIN. U.N.O.)
   - REINFORCING STEEL: ASTM A615, GRADE 60.
   - WIRE MESH: ASTM A185.
   - STRUCTURAL STEEL: ASTM A36.
   - ELECTRODES FOR WELDING: E 70xx.
   - GALVANIZING: ASTM A153 (BOLTS) OR ASTM A123 (SHAPES, PLATES).
   - EXPANSION BOLTS: HILTI KWIK BOLT II, STAINLESS STEEL, 3/4"øx4 3/4" EMBEDMENT OR AN APPROVED EQUAL.

3 NOTES
NOT TO SCALE

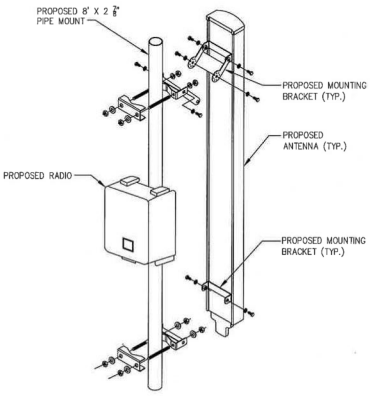

4 ANTENNA MOUNTING DETAIL
NOT TO SCALE

ERICSSON RADIO
P/N: RADIO 4478 B71
DIMENSIONS: 15"X13.2"X7.4"(HXWXD)
WEIGHT: 60.0 LBS

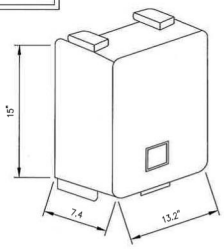

5 RADIO DETAIL
NOT TO SCALE

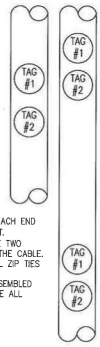

METALLIC TAG NOTES:

1. TWO METALLIC TAGS SHALL BE ATTACHED AT EACH END OF EVERY CABLE LONGER THAN (3) THREE FEET.
2. CABLES LESS THAN (3) THREE FEET WILL HAVE TWO METALLIC TAGS ATTACHED AT THE CENTER OF THE CABLE.
3. TAGS WILL BE FASTENED WITH STAINLESS STEEL ZIP TIES APPROPRIATE FOR CABLE DIAMETER.
4. STANDARDIZED METALLIC TAG KITS WILL BE ASSEMBLED WITH TAGS ALREADY ENGRAVED TO ACCOMODATE ALL CONFIGURATIONS.

5 METALLIC TAG DETAIL
NOT TO SCALE

T-Mobile
T-MOBILE NORTHEAST LLC
455 STREET ROAD
BERWYN, PA 19035

INFINIGY2
10203 Watervliet Shaker Rd
Albany, NY 12205
Phone (518) 690-0790
Fax (518) 690-0793

SUBMITTALS

DATE	DESCRIPTION	REVISION
09/13/17	ISSUED FOR PERMIT	0

DEPT.	DATE	APP'D	REVISIONS
RFE			
RF MWK.			
ZONING			
OPS			
CONSTR.			
SITE ACQ.			

PROJECT NO:	317-501
DRAWN BY:	MPS
CHECKED BY:	ASW

STATE OF MAINE
JOHN SWEVERS STEVENS
No. 12815
SEP 1 2 2017
LICENSED
PROFESSIONAL ENGINEER
PROFESSIONAL SEAL

THIS DOCUMENT IS THE CREATION, DESIGN, PROPERTY AND COPYRIGHTED WORK OF T-MOBILE. ANY DUPLICATION OR USE WITHOUT EXPRESS WRITTEN CONSENT IS STRICTLY PROHIBITED.

NOTE: IF DRAWINGS ARE 22"x34", USE GRAPHICAL SCALE AND/OR 1/2 TIMES OF THE NOTED SCALE.

SITE NUMBER:
4DN2267B

SITE NAME:
ME287 / DORLER TOWER (ATS)

220 RIVERSIDE INDUSTRIAL PARKWAY
PORTLAND, ME 04103

SHEET TITLE

EQUIPMENT SPECIFICATIONS

SHEET NUMBER

C-4

SHEET 5 OF 8 SHEETS

Reviewed for Code Compliance
Inspections Division
Approved with Conditions
Date: 11/27/17

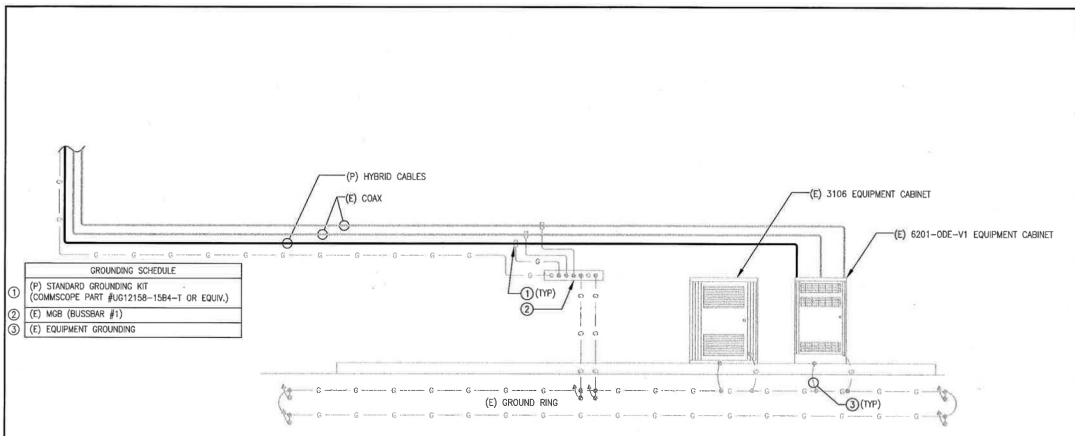

GROUNDING SCHEDULE	
1	(P) STANDARD GROUNDING KIT (COMMSCOPE PART #UG12158-15B4-T OR EQUIV.)
2	(E) MGB (BUSSBAR #1)
3	(E) EQUIPMENT GROUNDING

1 GROUNDING DIAGRAM
SCALE: NOT TO SCALE

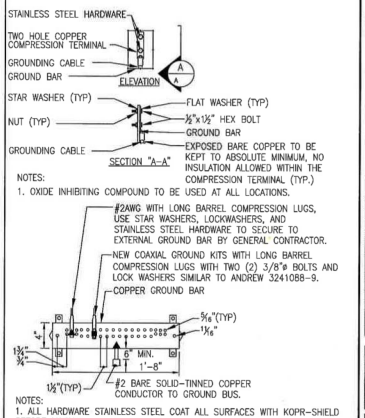

NOTES:
1. OXIDE INHIBITING COMPOUND TO BE USED AT ALL LOCATIONS.

NOTES:
1. ALL HARDWARE STAINLESS STEEL COAT ALL SURFACES WITH KOPR-SHIELD BEFORE MATING.
2. FOR GROUND BOND TO STEEL ONLY: INSERT A TOOTH WASHER BETWEEN LUG AND STEEL, COAT ALL SURFACES WITH KOPR-SHIELD.
3. ALL HOLES ARE COUNTERSUNK 1/16".

2 GROUND BAR CONNECTION DETAILS
SCALE: NOT TO SCALE

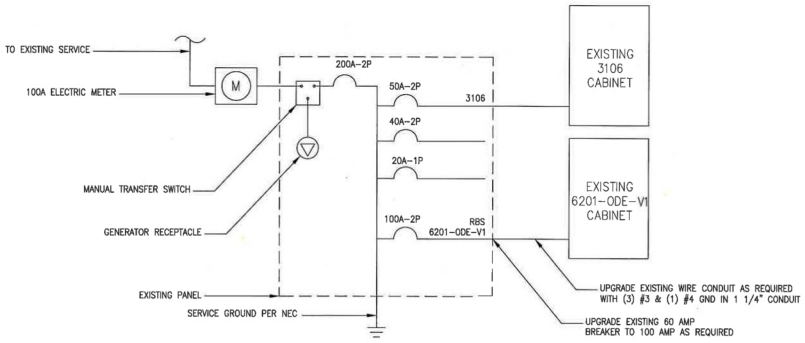

3 POWER DIAGRAM
SCALE: NOT TO SCALE

CONTRACTOR NOTE:
CONTRACTOR TO VERIFY THAT THE EXISTING CONDUITS AND WIRE SIZES ARE ADEQUATE FOR THE PROPOSED LOADING IN ACCORDANCE WITH NEC AND INCLUDE ELECTRICAL UPGRADES IN THE SCOPE OF WORK AS REQUIRED.

NOTE:
INFINIGY HAS NOT CONDUCTED AN ELECTRICAL LOAD STUDY FOR THIS SITE. CONTRACTOR IS TO VERIFY EXISTING ELECTRICAL LOADING PRIOR TO CONSTRUCTION TO ENSURE EXISTING INCOMING SERVICE CAPACITY. ALL ELECTRICAL INSTALLATION IS TO COMPLY WITH NEC, ADOPTED VERSION.

T-Mobile
T-MOBILE NORTHEAST LLC
439 STREET ROAD
BENSALEM, PA 19020

INFINIGY
1033 Watervliet Shaker Rd
Albany, NY 12205
Phone (518) 690-0790
Fax # (518) 690-0793

SUBMITTALS

DATE	DESCRIPTION	REVISION
09/13/17	ISSUED FOR PERMIT	0

DEPT.	DATE	APV'D	REVISIONS
RFE			
RF MWL			
ZONING			
OPS			
CONSTR.			
SITE ACQ.			

PROJECT NO: 317-501
DRAWN BY: MPS
CHECKED BY: ASW

STATE OF MAINE
JOHN W. STEVENS
No. 12818
LICENSED
PROFESSIONAL ENGINEER
SEP 13 2016
PROFESSIONAL SEAL

THIS DOCUMENT IS THE CREATION, DESIGN, PROPERTY AND COPYRIGHTED WORK OF T-MOBILE. ANY DUPLICATION OR USE WITHOUT EXPRESS WRITTEN CONSENT IS STRICTLY PROHIBITED.

NOTE: IF DRAWINGS ARE 22"x34", USE GRAPHICAL SCALE AND/OR 10 TIMES OF THE NOTED SCALE.

SITE NUMBER:
4DN2267B
SITE NAME:
ME267 / DORLER TOWER (ATS)
220 RIVERSIDE INDUSTRIAL PARKWAY
PORTLAND, ME 04103

SHEET TITLE
GROUNDING & POWER DIAGRAMS

SHEET NUMBER
E-1
SHEET 6 OF 8 SHEETS

Reviewed for Code Compliance
Inspections Division
Approved with Conditions
Date: 11/27/17

CONTRACTOR TO VERIFY LATEST T-MOBILE RFDS

1 6004G CONFIGURATION COAX/FIBER PLUMBING DIAGRAM
NOT TO SCALE

T-Mobile

T-MOBILE NORTHEAST LLC
400 STREET ROAD
BIDDEFORD, PA 18026

INFINIGY
1033 Watervliet Shaker Rd
Albany, NY 12205
Office # (518) 690-0790
Fax # (518) 690-0793

SUBMITTALS

DATE	DESCRIPTION	REVISION
09/13/17	ISSUED FOR PERMIT	0

DEPT.	DATE	APP'D	REVISIONS
RFE			
RF MAN.			
ZONING			
GPS			
COASTER			
SITE AC.			

PROJECT NO: 317-501
DRAWN BY: MPS
CHECKED BY: ASW

STATE OF MAINE
JOHN S. STEVENS
No. 12818
LICENSED
PROFESSIONAL ENGINEER
PROFESSIONAL SEAL
SEP 18

THIS DOCUMENT IS THE CREATION, DESIGN, PROPERTY AND COPYRIGHTED WORK OF T-MOBILE. ANY DUPLICATION OR USE WITHOUT EXPRESS WRITTEN CONSENT IS STRICTLY PROHIBITED.

NOTE: IF DRAWINGS ARE 22"x34", USE GRAPHICAL SCALE AND/OR 1/2 TIMES OF THE NOTED SCALE.

SITE NUMBER:
4DN2267B

SITE NAME:
ME287 / DORLER TOWER (ATS)

220 RIVERSIDE INDUSTRIAL PARKWAY
PORTLAND, ME 04103

SHEET TITLE
COAX/FIBER PLUMBING DIAGRAM

SHEET NUMBER
E-2

SHEET 7 OF 8 SHEETS

CITY OF PORTLAND, MAINE
RESURGAM

Reviewed for Code Compliance
Inspections Division
Approved with Conditions
Date: 11/27/17

ELECTRICAL NOTES:

WORK INCLUDED

1. INCLUDE ALL LABOR, MATERIALS, EQUIPMENT, PLANT SERVICES AND ADMINISTRATIVE TASKS REQUIRED TO COMPLETE AND MAKE OPERABLE THE ELECTRICAL WORK SHOWN ON THE DRAWINGS AND SPECIFIED HEREIN, INCLUDING BUT NOT LIMITED TO THE FOLLOWING:
   - A. PREPARE AND SUBMIT SHOP DRAWINGS, DIAGRAMS AND ILLUSTRATIONS.
   - B. PROCURE ALL NECESSARY PERMITS AND APPROVALS AND PAY ALL REQUIRED FEES AND CHARGES IN CONNECTION WITH THE WORK OF THIS CONTRACT.
   - C. REPAIRT AS-BUILT DRAWINGS, OPERATING AND MAINTENANCE INSTRUCTIONS AND MANUALS.
   - D. EXECUTE ALL CUTTING, DRILLING, ROUGH AND FINISH PATCHING OF EXISTING OR NEWLY INSTALLED CONSTRUCTION REQUIRED FOR THE WORK OF THIS CONTRACT. FOR SLAB PENETRATIONS THROUGH POST TENSION SLABS, X-RAY EXACT AREA OF PENETRATION PRIOR TO PERFORMING WORK. COORDINATE ALL X-RAY WORK WITH BUILDING ENGINEER.
   - E. PROVIDE HANGERS, SUPPORTS, FOUNDATIONS, STRUCTURAL FRAMING SUPPORTS, AND BASES FOR CONDUIT AND EQUIPMENT PROVIDED OR INSTALLED UNDER THE WORK OF HIS CONTRACT. PROVIDE COUNTER FLASHING, SLEEVES AND SEALS FOR FLOOR AND WALL PENETRATIONS.
   - F. MAINTAIN ALL EXISTING ELECTRICAL SERVICES IN THE BUILDING AREAS NOT AFFECTED BY THE ALTERATION DURING THE PROGRESS OF THE WORK INCLUDING PROVIDING ALL TEMPORARY JUMPERS, CONDUITS, CAPS, PROTECTIVE DEVICES, CONNECTIONS AND EQUIPMENT REQUIRED. PROVIDE TEMPORARY LIGHT AND POWER FOR CONSTRUCTION PURPOSES.
2. IT IS THE INTENT OF THESE DRAWINGS AND SPECIFICATIONS TO CALL FOR AN INSTALLATION THAT IS COMPLETE IN EVERY RESPECT. IT IS NOT THE INTENT TO GIVE EVERY DETAIL ON THE DRAWINGS AND IN THE SPECIFICATIONS. IF AN ITEM OF WORK IS INDICATED IN THE DRAWINGS, IT IS CONSIDERED SUFFICIENT FOR INCLUSION IN THE CONTRACT. FURNISH AND INSTALL ALL MATERIAL AND EQUIPMENT USUALLY FURNISHED OR NEEDED TO MAKE A COMPLETE INSTALLATION WHETHER OR NOT SPECIFICALLY MENTIONED IN THE CONTRACT DOCUMENTS.

GENERAL REQUIREMENTS

1. PROVIDE ALL WORK IN ACCORDANCE WITH THE NATIONAL ELECTRICAL CODE (NEC) AND LOCAL AND STATE ELECTRICAL CODES.
2. THE ELECTRICAL PLANS ARE DIAGRAMMATIC ONLY. REFER TO THE ARCHITECTURAL PLANS FOR THE EXACT DIMENSIONS OF THE BUILDING.
3. LOAD CALCULATIONS ARE BASED ON EXISTING BUILDING INFORMATION/DRAWINGS PROVIDED TO ENGINEERING. CONTRACTOR IS TO VERIFY ALL EXISTING RATINGS AND LOADS PRIOR TO PURCHASING OF SPECIFIED EQUIPMENT FOR COMPLIANCE TO NEC. CONTRACTOR TO NOTIFY ENGINEER OF ANY DISCREPANCIES AND REQUEST FURTHER DIRECTION BY ENGINEER.
4. EXISTING BUILDING EQUIPMENT IS NOTED ON THE DRAWINGS. NEW OR RELOCATED EQUIPMENT IS SHOWN WITH SOLID LINES. FUTURE EQUIPMENT (NOT IN THIS CONTRACT) IS DEPICTED WITH SHADED LINES. REQUEST CLARIFICATION OF DRAWINGS OR OF SPECIFICATIONS PRIOR TO PRICING OR INSTALLATION.
5. GENERAL
   - A. AFTER CAREFULLY STUDYING THE DRAWINGS AND SPECIFICATIONS, AND BEFORE SUBMITTING THE PROPOSAL, MAKE A MANDADORY SITE VISIT TO ASCERTAIN CONDITIONS OF THE SITE, AND THE NATURE AND EXACT QUANTITY OF WORK TO BE PERFORMED. NO EXTRA COMPENSATION WILL BE ALLOWED FOR FAILURE TO NOTIFY THE OWNER, IN WRITING, OF ANY DISCREPANCIES THAT MAY HAVE BEEN NOTED BETWEEN THE EXISTING CONDITIONS AND THE DRAWINGS AND SPECIFICATIONS.
   - B. VERIFY ALL MEASUREMENTS AT THE SITE AND BE RESPONSIBLE FOR CORRECTNESS OF SAME.
6. QUALITY, WORKMANSHIP, MATERIALS AND SAFETY
   - A. PROVIDE NEW MATERIALS AND EQUIPMENT OF A DOMESTIC MANUFACTURER BY THOSE REGULARLY ENGAGED IN THE PRODUCTION AND MANUFACTURE OF SPECIFIED MATERIALS AND EQUIPMENT. WHERE UL, OR OTHER AGENCY, HAS ESTABLISHED STANDARDS FOR MATERIALS, PROVIDE MATERIALS WHICH ARE LISTED AND LABELED ACCORDINGLY. THE COMMERCIALLY STANDARD ITEMS OF EQUIPMENT AND THE SPECIFIC NAMES MENTIONED HEREIN ARE INTENDED FOR THE PROPER FUNCTIONING OF THE WORK.
   - B. WORK SHALL BE PERFORMED BY WORKMEN SKILLED IN THE TRADE REQUIRED FOR THE WORK. INSTALL MATERIALS AND EQUIPMENT TO PRESENT A NEAT APPEARANCE WHEN COMPLETED AND IN ACCORDANCE WITH THE APPROVED RECOMMENDATIONS OF THE MANUFACTURER AND IN ACCORDANCE WITH CONTRACT DOCUMENTS.
   - C. PROVIDE LABOR, MATERIALS, APPARATUS AND APPLIANCES ESSENTIAL TO THE FUNCTIONING OF THE SYSTEMS DESCRIBED OR INDICATED HEREIN, OR WHICH MAY BE REASONABLY IMPLIED AS ESSENTIAL WHENEVER MENTIONED IN THE CONTRACT DOCUMENT OR NOT.
   - D. MAKE WRITTEN REQUESTS FOR SUPPLEMENTARY INSTRUCTIONS TO ARCHITECT/ENGINEER IN CASE OF DOUBT AS TO WORK INTENDED OR IN EVENT OF NEED FOR EXPLANATION THEREOF.
   - E. PERFORMANCE AND MATERIAL REQUIREMENTS SCHEDULED OR SPECIFIED ARE MINIMUM STANDARD ACCEPTABLE. THE RIGHT TO JUDGE THE QUALITY OF EQUIPMENT THAT DEVIATES FROM THE CONTRACT DOCUMENT REMAINS SOLELY WITH ARCHITECT/ENGINEER. CONTRACT DOCUMENT OR NOT.

GUARANTEE

1. GUARANTEE MATERIALS, PARTS AND LABOR FOR WORK FOR ONE YEAR FROM THE DATE OF ISSUANCE OF OCCUPANCY PERMIT. DURING THAT PERIOD, MAKE GOOD FAULTS OR IMPERFECTIONS THAT MAY ARISE DUE TO DEFECTS OR OMISSIONS IN MATERIALS OR WORKMANSHIP WITH NO ADDITIONAL COMPENSATION AND AS DIRECTED BY ARCHITECT.

CLEANING

1. REMOVE ALL CONSTRUCTION DEBRIS RESULTING FROM THE WORK.
2. CLEAN EQUIPMENT AND SYSTEMS FOLLOWING THE COMPLETION OF THE PROJECT TO THE SATISFACTION OF THE ENGINEER.

COORDINATION AND SUPERVISION

1. CAREFULLY LAY OUT ALL WORK IN ADVANCE TO AVOID UNNECESSARY CUTTING, CHANNELING, CHASING OR DRILLING OF FLOORS, WALLS, PARTITIONS, CEILINGS OR OTHER SURFACES. WHERE SUCH WORK IS NECESSARY, HOWEVER, PATCH AND REPAIR THE WORK IN AN APPROVED MANNER BY SKILLED MECHANICS AT NO ADDITIONAL COST TO THE OWNER. RENDER FULL COOPERATION TO OTHER TRADES WHERE WORK WILL BE INSTALLED IN CLOSE PROXIMITY TO WORK OF OTHER TRADES. ASSIST IN WORKING OUT SPACE CONDITIONS. IF WORK IS INSTALLED BEFORE COORDINATION WITH OTHER TRADES, OR CAUSES INTERFERENCE, MAKE CHANGES NECESSARY TO CORRECT CONDITIONS WITHOUT EXTRA CHARGE.

SUBMITTALS

1. AS-BUILT DRAWINGS:
   - A. UPON COMPLETION OF THE WORK, FURNISH TO THE OWNER "AS-BUILT" DRAWINGS.
2. SERVICE MANUALS:
   - A. UPON COMPLETION OF THE WORK, FULLY INSTRUCT T-MOBILE AS TO THE OPERATION AND MAINTENANCE OF ALL MATERIAL, EQUIPMENT AND SYSTEMS.
   - B. PROVIDE 3 COMPLETE BOUND SETS OF INSTRUCTIONS FOR OPERATING AND MAINTAINING ALL SYSTEMS AND EQUIPMENT.

CUTTING AND PATCHING

1. PROVIDE ALL CUTTING, DRILLING, ROUGH AND FINISH PATCHING REQUIRED TO COMPLETE THE WORK.
2. OBTAIN OWNER APPROVAL PRIOR TO CUTTING THROUGH FLOORS OR WALLS FOR PIPING OR CONDUIT.

TESTS, INSPECTION AND APPROVAL

1. BEFORE ENERGIZING ANY ELECTRICAL INSTALLATION, INSPECT EACH UNIT IN DETAIL. TIGHTEN ALL BOLTS AND CONNECTIONS (TORQUE-TIGHTEN WHERE REQUIRED) AND DETERMINE THAT ALL COMPONENTS ARE ALIGNED, AND THE EQUIPMENT IS IN SAFE, OPERATIONAL CONDITION.
2. PROVIDE THE COMPLETE ELECTRICAL SYSTEM FREE OF GROUND FAULTS AND SHORT CIRCUITS SUCH THAT THE SYSTEM WILL OPERATE SATISFACTORILY UNDER FULL LOAD CONDITIONS, WITHOUT EXCESSIVE HEATING AT ANY POINT IN THE SYSTEM.

SPECIAL REQUIREMENTS

1. DO NOT LEAVE ANY WORK INCOMPLETE NOR ANY HAZARDOUS SITUATIONS CREATED WHICH WILL AFFECT THE LIFE OR SAFETY OF THE PUBLIC AND/OR BUILDING OCCUPANTS. DO NOT INTERFERE WITH OR CUTOFF ANY OF THE EXISTING SERVICES WITHOUT THE OWNER'S WRITTEN PERMISSION.
2. WHEN NECESSARY TO TEMPORARILY DISCONNECT ANY EXISTING BUILDING UTILITIES AND SERVICE SYSTEMS, INCLUDING FEEDER OR BRANCH CIRCUITING SUPPLYING EXISTING FACILITIES, CONFER WITH THE OWNER AND ARRANGE THE PERIOD OF INTERRUPTION FOR A TIME MUTUALLY AGREED UPON. SHUTDOWN NOTE: SCHEDULE AND NOTIFY OWNER 48 HOURS PRIOR TO SHUTDOWN. ALL SHUTDOWN WORK TO BE SCHEDULED AT A TIME CONVENIENT TO OWNER.

GROUNDING

1. ROUTE ALL GROUNDING CONDUCTORS AS SHOWN ON CONDUIT/GROUNDING RISER.
2. ROUTE 500 KCMIL CU. THHN CONDUCTOR FROM THE MGB LOCATION TO BUILDING STEEL. VERIFY BUILDING STEEL IS EFFECTIVELY GROUNDED PER NEC TO THE MAIN SERVICE GROUNDING ELECTRODE CONDUCTOR (GEC).
3. MAKE ALL GROUND CONNECTIONS FROM MGB TO ELECTRICAL EQUIPMENT WITH 2 HOLE, CRIMP TYPE, BURNDY COMPRESSION TERMINATIONS, SIZED AS REQUIRED.
4. USE 1 HOLE, CRIMP TYPE, BURNDY COMPRESSIONS TERMINATIONS, SIZED AS REQUIRED, AT EQUIPMENT GROUND CONNECTIONS.
5. HIRE AN INDEPENDENT LAB TO PERFORM THE SPECIFIED OHMS TESTING. PROVIDE 4 SETS OF THE CERTIFIED DOCUMENTS TO THE OWNER FOR VERIFICATION PRIOR TO THE PROJECT COMPLETION.

RACEWAYS

1. ALL WIRING TO BE INSTALLED IN CONDUIT SYSTEMS IN ACCORDANCE WITH THE FOLLOWING:
   - A. EXTERIOR FEEDERS AND CONTROL, WHERE UNDERGROUND, TO BE IN SCH 40 PVC.
   - B. EXTERIOR, ABOVE GROUND POWER CONDUITS TO BE GALVANIZED RIGID STEEL (RGS).
   - C. ALL TELECOMMUNICATION CONDUITS, INTERIOR/EXTERIOR, TO BE EMT.
   - D. INSTALL PULL ROPES IN ALL NEW EMPTY CONDUITS INSTALLED ON THIS PROJECT.
   - E. ALL TELECOM CONDUITS AND PULL BOXES INSTALLED ON THIS PROJECT TO BE LABELED "T-MOBILE". OWNER WILL PROVIDE LABELS FOR CONTRACTOR TO INSTALL.
   - F. INTERIOR FEEDERS TO BE INSTALLED IN E.M.T. WITH STEEL COMPRESSION FITTINGS.
   - G. MINIMUM SIZE CONDUIT TO BE ¾" TRADE SIZE UNLESS OTHERWISE INDICATED ON THE DRAWINGS.
   - H. FINAL CONNECTIONS TO MOTORS AND VIBRATING EQUIPMENT TO BE INSTALLED IN LIQUID-TIGHT FLEXIBLE METAL CONDUIT.
   - I. CONDUIT TO BE RUN CONCEALED IN CEILINGS, FINISHED AREAS OR DRYWALL PARTITIONS, UNLESS OTHERWISE NOTED.
   - J. THE ROUTING OF CONDUITS INDICATED ON THE DRAWINGS IS DIAGRAMMATIC. BEFORE INSTALLING ANY WORK, EXAMINE THE WORKING LAYOUTS AND SHOP DRAWINGS OF THE OTHER TRADES TO DETERMINE THE EXACT LOCATIONS AND CLEARANCES.
   - K. ALL EXTERIOR MOUNTING HARDWARE TO BE GALVANIZED STEEL. COORDINATE WITH BUILDING ENGINEER PRIOR TO ATTACHING TO BUILDING STRUCTURE.

RACEWAYS CONT'D

   - L. PENETRATIONS OF WALLS, FLOORS AND ROOFS, FOR THE PASSAGE OF ELECTRICAL RACEWAYS, TO BE PROPERLY SEALED AFTER INSTALLATION OF RACEWAYS SO AS TO MAINTAIN THE STRUCTURAL OR WATERPROOF INTEGRITY OF THE WALL, FLOOR OR ROOF SYSTEM TO BE PENETRATED. SEAL ALL CONDUIT PENETRATIONS THROUGH FIRE OR SMOKE RATED WALLS, CEILINGS OR SMOKE TIGHT CORRIDOR PARTITIONS TO MAINTAIN PROPER RATING OF WALL OR CEILING.
   - M. PROVIDE ALL CONDUIT ENDS WITH INSULATED METALLIC GROUNDING BUSHINGS.
   - N. CONDUIT TO BE SUPPORTED AT MAXIMUM DISTANCE OF 8'-0", OR AS REQUIRED BY NEC, IN HORIZONTAL AND VERTICAL DIRECTIONS.
   - O. PROVIDE STAINLESS STEEL BLANK COVER PLATES FOR ALL JUNCTION BOXES AND/OR OUTLET BOXES NOT USED IN EXPOSED AREAS. PROVIDE ALL OTHER UNUSED BOXES WITH STANDARD STEEL COVER PLATES.
   - P. WHERE APPLICABLE, PROVIDE ROOFTOP CONDUIT SUPPORT SYSTEM, CONFORMING TO ROOFTOP WARRANTY REQUIREMENTS, PER BUILDING.

WIRES AND CABLES

1. CONTRACTOR TO COORDINATE WITH EQUIPMENT SUPPLIER AND VENDOR FOR EXACT EQUIPMENT OVER-CURRENT PROTECTION VOLTAGE, WIRE SIZE AND PLUG CONFIGURATION, IF APPLICABLE, PRIOR TO BID.
2. ALL EQUIPMENT/DEVICES TO BE PROVIDED WITH INSULATED GROUND CONDUCTOR.
3. ALL WIRE AND CABLE TO BE 600VOLT, COPPER, WITH THWN/THHN INSULATION, EXCEPT AS NOTED.
4. WIRE FOR POWER AND LIGHTING WILL NOT BE LESS THAN NO. 12AWG. ALL WIRE NO. 8 AND LARGER TO BE STRANDED.
5. CONTROL WIRING IS NOT TO BE LESS THAN NO. 14AWG. FLEXIBLE IN SINGLE CONDUCTORS OR MULTI-CONDUCTOR CABLES. CONTROL WIRING WILL CONSIST OF MULTI-CONDUCTOR CABLES WHEREVER POSSIBLE. CABLES TO BE PROVIDED WITH AN OVERALL FLAME-RETARDANT, EXTRUDED JACKET AND RATED FOR PLENUM USE. ALL CONTROL WIRE TO BE 600VOLT RATED.
6. WIRE PREVIOUSLY PULLED INTO CONDUIT IS CONSIDERED USED AND IS NOT TO BE RE-PULLED.
7. HOME RUNS AND BRANCH CIRCUIT WIRING FOR 20A, 120V CIRCUITS:

LENGTH (FT.)	HOME RUN WIRE SIZE
0 TO 50	NO. 12
51 TO 100	NO. 10
101 TO 150	NO. 8

8. VOLTAGE DROP IS NOT TO EXCEED 3%.
9. MAKE ALL CONNECTIONS WITH UL APPROVED, SOLDERLESS, PRESSURE TYPE INSULATED CONNECTORS: SCOTCHLOK OR AND APPROVED EQUAL.

WIRING DEVICES

1. ALL RECEPTACLES INSTALLED IN THIS PROJECT TO BE GROUNDING TYPE, WITH GROUNDING PIN SLOT CONNECTED TO DEVICE GROUND SCREW FOR GROUND WIRE CONNECTION.

DISCONNECT SWITCHES AND FUSES

1. DISCONNECT SWITCHES TO BE VOLTAGE-RATED TO SUIT THE CHARACTERISTICS OF THE SYSTEM FROM WHICH THEY ARE SUPPLIED.
2. PROVIDE HEAVY-DUTY, METAL-ENCLOSED, EXTERNALLY-OPERATED DISCONNECT SWITCHES, FUSED OR UNFUSED, OF SUCH TYPE AND SIZE AS REQUIRED TO PROPERLY PROTECT OR DISCONNECT THE LOAD FOR WHICH THEY ARE INTENDED.
3. PROVIDE NEMA 1 DISCONNECT SWITCHES FOR INTERIOR INSTALLATION, NEMA 3R FOR EXTERIOR INSTALLATION.
4. DISCONNECT SWITCHES TO BE MANUFACTURED BY:
   - A. GENERAL ELECTRIC COMPANY
   - B. SQUARE-D
5. PROVIDE RK-1 TYPE FUSES, UNLESS NOTED OTHERWISE.

INSTALLATION

1. INSTALL DISCONNECT SWITCHES WHERE INDICATED ON DRAWINGS.
2. INSTALL FUSES IN FUSIBLE DISCONNECT SWITCHES. FUSES MUST MATCH IN TYPE AND RATING.
3. FUSES TO BE MOUNTED SO THAT THE LABELS SHOWING THEIR RATINGS CAN BE READ WITHOUT REQUIRING FUSE REMOVAL.
4. FURNISH AND DEPOSIT SPARE FUSES AT THE JOB SITE AS FOLLOWS:
   - A. THREE SPARES FOR EACH TYPE AND SIZE, IN EXCESS OF 60A, USED FOR INITIAL FUSING.
   - B. TEN PERCENT SPARES FOR EACH TYPE AND SIZE, UP TO AND INCLUDING 60A, USED FOR INITIAL FUSING. IN NO CASE WILL LESS THAN THREE FUSES OF ONE PARTICULAR TYPE AND SIZE BE FURNISHED.

GENERAL NOTES:

INTENT

1. THESE SPECIFICATIONS AND CONSTRUCTION DRAWINGS ACCOMPANYING THEM DESCRIBE THE WORK TO BE DONE AND THE MATERIALS TO BE FURNISHED FOR CONSTRUCTION.
2. THE DRAWINGS AND SPECIFICATIONS ARE INTENDED TO BE FULLY EXPLANATORY AND SUPPLEMENTARY. HOWEVER, SHOULD ANYTHING BE SHOWN, INDICATED, OR SPECIFIED ON ONE AND NOT THE OTHER, IT SHALL BE DONE THE SAME AS IF SHOWN, INDICATED OR SPECIFIED IN BOTH
3. THE INTENTION OF THE DOCUMENTS IS TO INCLUDE ALL LABOR AND MATERIALS REASONABLY NECESSARY FOR THE PROPER EXECUTION AND COMPLETION OF THE WORK AS STIPULATED IN THE CONTRACT.
4. THE PURPOSE OF THE SPECIFICATIONS IS TO INTERPRET THE INTENT OF THE DRAWINGS AND TO DESIGNATE THE METHOD OF THE PROCEDURE, TYPE AND QUALITY OF MATERIALS REQUIRED TO COMPLETE THE WORK.
5. MINOR DEVIATIONS FROM THE DESIGN LAYOUT ARE ANTICIPATED AND SHALL BE CONSIDERED AS PART OF THE WORK. NO CHANGES THAT ALTER THE CHARACTER OF THE WORK WILL BE MADE OR PERMITTED BY THE OWNER WITHOUT ISSUING A CHANGE ORDER.

CONFLICTS

1. THE CONTRACTOR SHALL BE RESPONSIBLE FOR VERIFICATIONS OF ALL MEASUREMENTS AT THE SITE BEFORE ORDERING ANY MATERIALS OR DOING ANY WORK. NO EXTRA CHARGE OR COMPENSATION SHALL BE ALLOWED DUE TO DIFFERENCE BETWEEN ACTUAL DIMENSIONS AND DIMENSIONS INDICATED ON THE CONSTRUCTION DRAWINGS. ANY SUCH DISCREPANCY IN DIMENSION WHICH MAY BE FOUND SHALL BE SUBMITTED TO THE OWNER FOR CONSIDERATION BEFORE THE CONTRACTOR PROCEEDS WITH THE WORK IN THE AFFECTED AREAS.
2. THE BIDDER, IF AWARDED THE CONTRACT, WILL NOT BE ALLOWED ANY EXTRA COMPENSATION BY REASON OF ANY MATTER OR THING CONCERNING SUCH BIDDER MIGHT HAVE FULLY INFORMED THEMSELVES PRIOR TO THE BIDDING.
3. NO PLEA OF IGNORANCE OF CONDITIONS THAT EXIST, OR OF DIFFICULTIES OR CONDITIONS THAT MAY BE ENCOUNTERED, OR OF ANY OTHER RELEVANT MATTER CONCERNING THE WORK TO BE PERFORMED IN THE EXECUTION OF THE WORK WILL BE ACCEPTED AS AN EXCUSE FOR ANY FAILURE OR OMISSION ON THE PART OF THE CONTRACTOR TO FULFILL EVERY DETAIL OF ALL THE REQUIREMENTS OF THE CONTRACT DOCUMENTS GOVERNING THE WORK.

CONTRACTS AND WARRANTIES

1. CONTRACTOR IS RESPONSIBLE FOR APPLICATION AND PAYMENT OF CONTRACTOR LICENSES AND BONDS.
2. SEE MASTER CONTRACTION SERVICES AGREEMENT FOR ADDITIONAL DETAILS.

STORAGE

1. ALL MATERIALS MUST BE STORED IN A LEVEL AND DRY FASHION AND IN A MANNER THAT DOES NOT NECESSARILY OBSTRUCT THE FLOW OF OTHER WORK. ANY STORAGE METHOD MUST MEET ALL RECOMMENDATIONS OF THE ASSOCIATED MANUFACTURER.

CLEANUP

1. THE CONTRACTORS SHALL, AT ALL TIMES, KEEP THE SITE FREE FROM ACCUMULATION OF WASTE MATERIALS OR RUBBISH CAUSED BY THEIR EMPLOYEES AT WORK AND AT THE COMPLETION OF THE WORK. THEY SHALL REMOVE ALL RUBBISH FROM AND ABOUT THE BUILDING AREA, INCLUDING ALL THEIR TOOLS, SCAFFOLDING AND SURPLUS MATERIALS AND SHALL LEAVE THEIR WORK CLEAN AND READY TO USE.
2. EXTERIOR
   - A. VISUALLY INSPECT EXTERIOR SURFACES AND REMOVE ALL TRACES OF SOIL, WASTE MATERIALS, SMUDGES AND OTHER FOREIGN MATTER.
   - B. REMOVE ALL TRACES OF SPLASHED MATERIALS FROM ADJACENT SURFACES.
   - C. IF NECESSARY, TO ACHIEVE A UNIFORM DEGREE OF CLEANLINESS, HOSE DOWN THE EXTERIOR OF THE STRUCTURE.
3. INTERIOR
   - A. VISUALLY INSPECT INTERIOR SURFACE AND REMOVE ALL TRACES OF SOIL, WASTE MATERIALS, SMUDGES AND OTHER FOREIGN MATTER FROM WALLS, FLOOR, AND CEILING.
   - B. REMOVE ALL TRACES OF SPLASHED MATERIALS FROM ADJACENT SURFACES.
   - C. REMOVE PAINT DROPPINGS, SPOTS, STAINS, AND DIRT FROM FINISHED SURFACES.

CHANGE ORDER PROCEDURE:

1. REFER TO SECTION 17 OF SIGNED MCSA: SEE PROFESSIONAL SERVICE AGREEMENT FOR MCSA.

RELATED DOCUMENTS AND COORDINATION

1. GENERAL CARPENTRY, ELECTRICAL AND ANTENNA DRAWINGS ARE INTERRELATED. IN PERFORMANCE OF THE WORK, THE CONTRACTOR MUST REFER TO ALL DRAWINGS. ALL COORDINATION TO BE THE RESPONSIBILITY OF THE CONTRACTOR.

SHOP DRAWINGS

1. CONTRACTOR SHALL SUBMIT SHOP DRAWINGS AS REQUIRED AND LISTED IN THESE SPECIFICATIONS TO THE OWNER FOR APPROVAL.
2. ALL SHOP DRAWINGS SHALL BE REVIEWED, CHECKED AND CORRECTED BY CONTRACTOR PRIOR TO SUBMITTAL TO THE OWNER.

PRODUCTS AND SUBSTITUTIONS

1. SUBMIT 3 COPIES OF EACH REQUEST FOR SUBSTITUTION. IN EACH REQUEST, IDENTIFY THE PRODUCT OR FABRICATION OR INSTALLATION METHOD TO BE REPLACED BY THE SUBSTITUTION. INCLUDE RELATED SPECIFICATION SECTION AND DRAWING NUMBERS AND COMPLETE DOCUMENTATION SHOWING COMPLIANCE WITH THE REQUIREMENTS FOR SUBSTITUTIONS.
2. SUBMIT ALL NECESSARY PRODUCT DATA AND CUT SHEETS WHICH PROPERLY INDICATE AND DESCRIBE THE ITEMS, PRODUCTS AND MATERIALS BEING INSTALLED. THE CONTRACTOR SHALL, IF DEEMED NECESSARY BY THE OWNER, SUBMIT ACTUAL SAMPLES TO THE OWNER FOR APPROVAL IN LIEU OF CUT SHEETS.

QUALITY ASSURANCE

1. ALL WORK SHALL BE IN ACCORDANCE WITH APPLICABLE LOCAL, STATE AND FEDERAL REGULATIONS. THESE SHALL INCLUDE, BUT NOT BE LIMITED TO THE APPLICABLE CODES SET FORTH BY THE LOCAL GOVERNING BODY. SEE "CODE COMPLIANCE" T-1.

ADMINISTRATION

1. BEFORE THE COMMENCEMENT OF ANY WORK, THE CONTRACTOR WILL ASSIGN A PROJECT MANAGER WHO WILL ACT AS A SINGLE POINT OF CONTACT FOR ALL PERSONNEL INVOLVED IN THIS PROJECT. THIS PROJECT MANAGER WILL DEVELOP A MASTER SCHEDULE FOR THE PROJECT WHICH WILL BE SUBMITTED TO THE OWNER PRIOR TO THE COMMENCEMENT OF ANY WORK.
2. SUBMIT A BAR TYPE PROGRESS CHART, NOT MORE THAN 3 DAYS AFTER THE DATE ESTABLISHED FOR COMMENCEMENT OF THE WORK ON THE SCHEDULE, INDICATING A TIME BAR FOR EACH MAJOR CATEGORY OR UNIT OF WORK TO BE PERFORMED AT THE SITE, PROPERLY SEQUENCED AND COORDINATED WITH OTHER ELEMENTS OF WORK AND SHOWING COMPLETION OF THE WORK SUFFICIENTLY IN ADVANCE OF THE DATE ESTABLISHED FOR SUBSTANTIAL COMPLETION OF THE WORK.
3. PRIOR TO COMMENCING CONSTRUCTION, THE OWNER SHALL SCHEDULE AN ON-SITE MEETING WITH ALL MAJOR PARTIES. THIS WOULD INCLUDE, BUT NOT LIMITED TO, THE OWNER, PROJECT MANAGER, CONTRACTOR, LAND OWNER REPRESENTATIVE, LOCAL TELEPHONE COMPANY, TOWER ERECTION FOREMAN (IF SUBCONTRACTED).
4. CONTRACTOR SHALL BE EQUIPPED WITH SOME MEANS OF CONSTANT COMMUNICATIONS, SUCH AS A MOBILE PHONE OR A BEEPER. THIS EQUIPMENT WILL NOT BE SUPPLIED BY THE OWNER, NOR WILL WIRELESS SERVICE BE ARRANGED.
5. DURING CONSTRUCTION, CONTRACTOR MUST ENSURE THAT EMPLOYEES AND SUBCONTRACTORS WEAR HARD HATS AT ALL TIMES. CONTRACTOR WILL COMPLY WITH ALL WPCS SAFETY REQUIREMENTS IN THEIR AGREEMENT.
6. PROVIDE WRITTEN DAILY UPDATES ON SITE PROGRESS TO THE OWNER.
7. COMPLETE INVENTORY OF CONSTRUCTION MATERIALS AND EQUIPMENT IS REQUIRED PRIOR TO START OF CONSTRUCTION.
8. NOTIFY THE OWNER/PROJECT MANAGER IN WRITING NO LESS THAN 48 HOURS IN ADVANCE OF CONCRETE POURS, TOWER ERECTIONS, AND EQUIPMENT CABINET PLACEMENTS.

INSURANCE AND BONDS

1. CONTRACTOR, AT THEIR OWN EXPENSE, SHALL CARRY AND MAINTAIN, FOR THE DURATION OF THE PROJECT, ALL INSURANCE, AS REQUIRED AND LISTED, AND SHALL NOT COMMENCE WITH THEIR WORK UNTIL THEY HAVE PRESENTED AN ORIGINAL CERTIFICATE OF INSURANCE STATING ALL COVERAGES TO THE OWNER. REFER TO THE MASTER AGREEMENT FOR REQUIRED INSURANCE LIMITS.
2. THE OWNER SHALL BE NAMED AS AN ADDITIONAL INSURED ON ALL POLICIES.
3. CONTRACTOR MUST PROVIDE PROOF OF INSURANCE.

ARCHITECTURAL SYMBOLS

ROOM ###
X

DETAIL REFERENCE KEY

REFER TO
DRAWING DETAIL NUMBER
RE: 2/A-3
2
A-3
SHEET NUMBER OF DETAIL

ABBREVIATIONS

ADJ	ADJUSTABLE
AGL	ABOVE GROUND LINE
&	AND
APPROX	APPROXIMATE
@	AT
BTS	BASE TRANSMISSION STATION
CAB	CABINET
CLG	CEILING
CONC	CONCRETE
CONT	CONTINUOUS
DIA OR ø	DIAMETER
DWG	DRAWING
EA	EACH
ELEC	ELECTRICAL
ELEV	ELEVATION
EQ	EQUAL
EQUIP	EQUIPMENT
EGB	EQUIPMENT GROUND BAR
(E)	EXISTING
EXT	EXTERIOR
FF	FINISHED FLOOR
GA	GAUGE
GALV	GALVANIZED
GC	GENERAL CONTRACTOR
GRND	GROUND
LG	LONG
MAX	MAXIMUM
MECH	MECHANICAL
MW	MICROWAVE DISH
MFR	MANUFACTURER
MGB	MASTER GROUND BAR
MIN	MINIMUM
MTL	METAL
(N)	NEW
NIC	NOT IN CONTRACT
NTS	NOT TO SCALE
OC	ON CENTER
OPP	OPPOSITE
(P)	PROPOSED
PCS	PERSONAL COMMUNICATION SYSTEM
PPC	POWER PROTECTION CABINET
SF	SQUARE FOOT
SHT	SHEET
SIM	SIMILAR
SS	STAINLESS STEEL
STL	STEEL
TOC	TOP OF CONCRETE
TOM	TOP OF MASONRY
TYP	TYPICAL
VIF	VERIFY IN FIELD
UON	UNLESS OTHERWISE NOTED
WWF	WELDED WIRE FABRIC
W/	WITH

T-Mobile
T-MOBILE NORTHEAST LLC
455 STREET ROAD
BONSALL, PA 19009

INFINIGY2
1053 Waterfall Shaker Rd
Albany, NY 12205
Tel # (518) 690-0790
Fax # (518) 690-0791

SUBMITTALS

DATE	DESCRIPTION	REVISION
09/13/17	ISSUED FOR POINT	4

DEPT.	DATE	APP'D	REVISIONS
RFE			
RF MWL			
ZONING			
OPS			
CONSTR.			
SITE AE			

PROJECT NO:	317-501
DRAWN BY:	MPS
CHECKED BY:	ASW

STATE OF MAINE
JOHN W. STEVENS
No. 2281
LICENSED
PROFESSIONAL ENGINEER
SEP 13 2017

THIS DOCUMENT IS THE CREATION, DESIGN, PROPERTY AND COPYRIGHTED WORK OF T-MOBILE. ANY DUPLICATION OR USE WITHOUT EXPRESS WRITTEN CONSENT IS STRICTLY PROHIBITED.

NOTE: IF DRAWINGS ARE 22"x34", USE GRAPHICAL SCALE AND/OR 1/2 TIMES OF THE NOTED SCALE.

SITE NUMBER:
4DN2267B

SITE NAME:
ME267 / DORLER TOWER (ATS)

220 RIVERSIDE INDUSTRIAL PARKWAY
PORTLAND, ME 04103

SHEET TITLE

GENERAL AND ELECTRICAL NOTES

SHEET NUMBER

N-1

SHEET 8 OF 8 SHEETS