NOTE:

1. A SITE VISIT/SURVEY WAS NOT CONDUCTED BY ADVANCED ENGINEERING GROUP, P.C. SITE INFORMATION AND PLANS ARE BASED UPON INFORMATION PROVIDED BY CLIENT

2. AN ANALYSIS FOR THE CAPACITY OF THE EXISTING STRUCTURE TO SUPPORT THE PROPOSED EQUIPMENT SHALL BE CONDUCTED PRIOR TO CONSTRUCTION (BY OTHERS.) AEG HAS NOT CONDUCTED A STRUCTURAL ANALYSIS.

EXISTING ANTENNA SCHEDULE

SECTOR	MAKE	MODEL#
SECTOR A:	RFS	APX16DWV-16D
	RFS	APX16DWV-16D
SECTOR B:	RFS	APX16DWV-16D
	RFS	APX16DWV-16D
SECTOR C:	RFS	APX16DWV-16D
	RFS	APX16DWV-16D

PROPOSED ANTENNA SCHEDULE

SECTOR	MAKE	MODEL#	SIZE (INCHES)
SECTOR A:	ERICSSON	AIR21 B2A/B4P	12X8X56
	ERICSSON	AIR21 B4A/B2P	12X8X56
SECTOR B:	ERICSSON	AIR21 B2A/B4P	12X8X56
	ERICSSON	AIR21 B4A/B2P	12X8X56
SECTOR C:	ERICSSON	AIR21 B2A/B4P	12X8X56
	ERICSSON	AIR21 B4A/B2P	12X8X56

Reviewed for Code Compliance
Inspections Division
Approved with Conditions
Date: 06/17/14

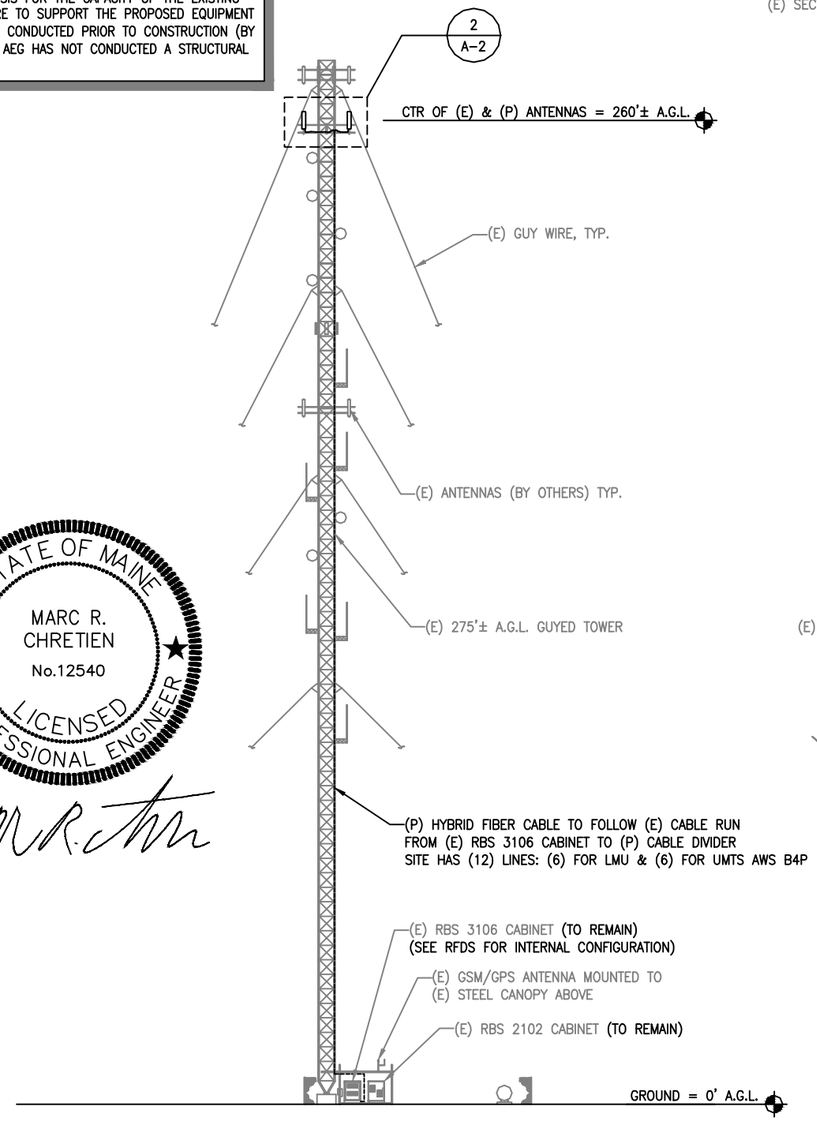

ELEVATION 1/A-2

SCALE: 1"=20'-0"

0' 10' 20' 40'

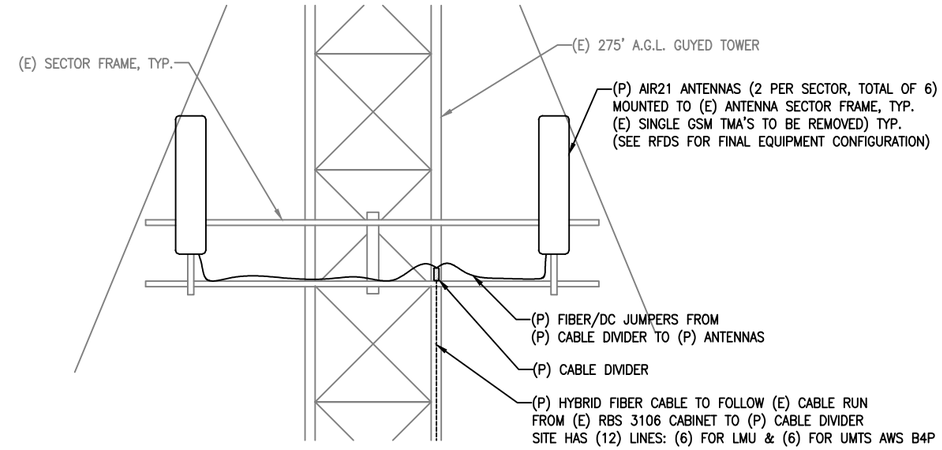

ENLARGED ELEVATION 2/A-2

SCALE: 1"=5'-0"

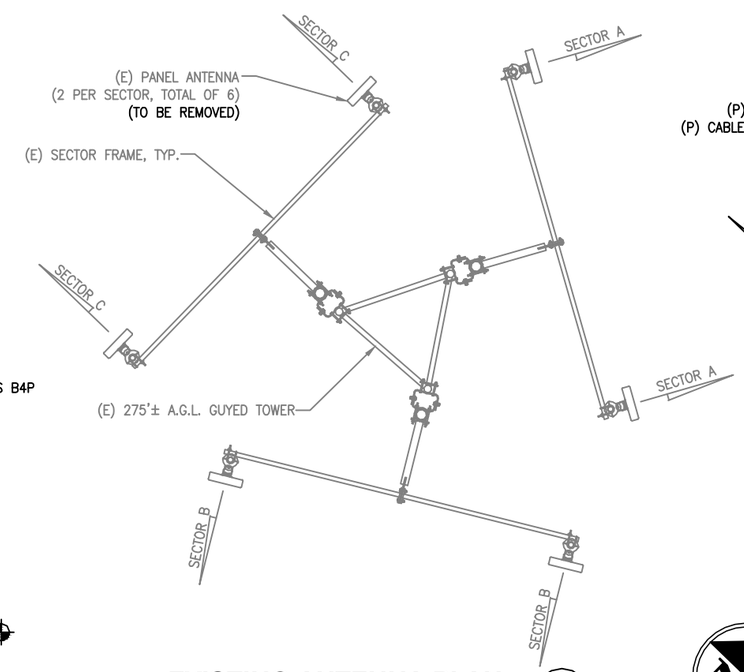

EXISTING ANTENNA PLAN 3/A-2

SCALE: 1"=5'-0"

0' 1'-3" 2'-6" 5'-0"

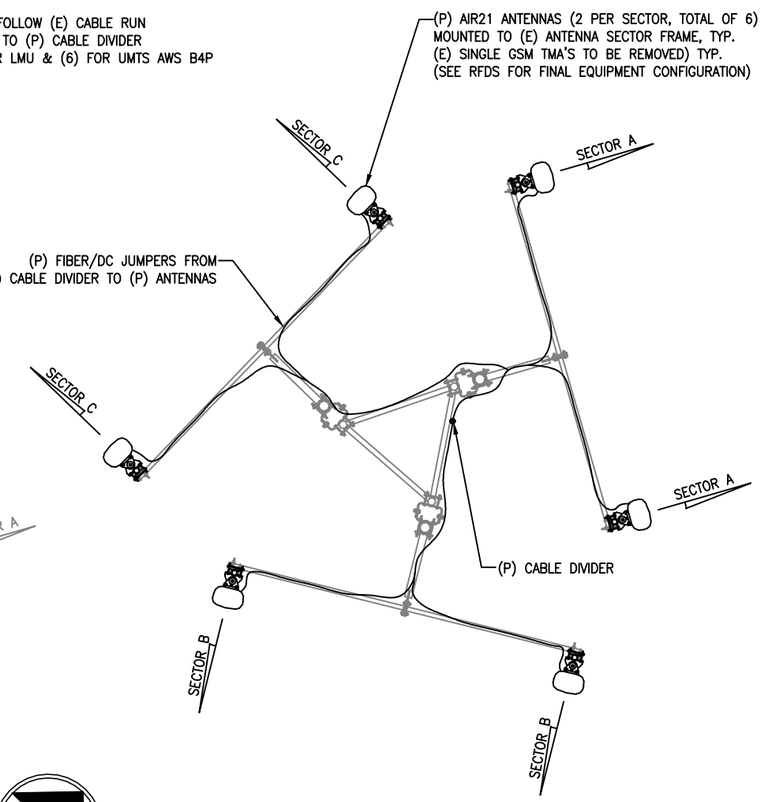

PROPOSED ANTENNA PLAN 4/A-2

SCALE: 1"=5'-0"

0' 1'-3" 2'-6" 5'-0"

STATE OF MAINE
MARC R. CHRETIEN
No.12540
LICENSED PROFESSIONAL ENGINEER

ADVANCED ENGINEERING GROUP, P.C.
Civil Engineering - Site Development Surveying - Telecommunications
500 NORTH BROADWAY
EAST PROVIDENCE, RI 02914
PH: (401) 354-2403
FAX: (401) 633-6354

AMERICAN TOWER
1898 Leland Drive SE | Suite A | Marietta, GA 30067
Vendor.Compliance@americantower.com | Fax. 1.770.234.5698
www.americantower.com

SITE NUMBER: 4DN2267B
SITE NAME: ME267/DORLER TOWER (ATS)
220 RIVERSIDE INDUSTRIAL PARKWAY
PORTLAND, ME 04103

T-MOBILE NORTHEAST LLC
15 COMMERCE WAY, SUITE B
NORTON, MA 02766
OFFICE: (508) 286-2700
FAX: (508) 286-2893

NO.	DATE	REVISIONS	BY	CHK	APP'D
2	05/15/14	REVISIONS	JTG	SNA	SNA
1	04/10/14	REVISIONS	JTG	SNA	SNA
0	03/26/14	ISSUED FOR REVIEW	JTG	SNA	SNA

SCALE: AS SHOWN | DESIGNED BY: SNA | DRAWN BY: JTG

T-MOBILE

ELEVATION & ANTENNA PLAN

JOB NUMBER	DRAWING NUMBER	REV
4DN2267B	C-2	2