NOTE: TIGHTEN WIRE OR CABLE ONLY ENOUGH TO KEEP FROM SLIPPING. ALLOW FOR SOME TRUNK MOVEMENT. PLASTIC HOSE SHALL BE LONG ENOUGH TO ACCOMMODATE 35MM (1.5 IN.) OF GROWTH AND BUFFER ALL BRANCHES FROM THE WIRE.

TUCK ANY LOOSE ENDS OF THE WIRE OR CABLE INTO THE WIRE WRAP SO THAT NO SHARP WIRE ENDS ARE EXPOSED.

INSTALL THREE GUY WIRES PER TREE, SPACED EVENLY AROUND THE TRUNK.

REMOVE ALL STAKING AS SOON AS THE TREE HAS GROWN SUFFICIENT ROOTS TO OVERCOME THE PROBLEM THAT REQUIRED THE TREE TO BE STAKED. STAKES SHALL BE REMOVED NO LATER THAN THE END OF THE FIRST GROWING SEASON AFTER PLANTING.

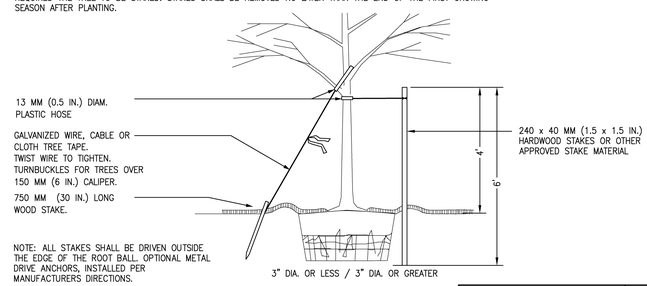

NOTE: ALL STAKES SHALL BE DRIVEN OUTSIDE THE EDGE OF THE ROOT BALL. OPTIONAL METAL DRIVE ANCHORS, INSTALLED PER MANUFACTURERS DIRECTIONS.

TREE STAKING DETAIL — D3
NOT TO SCALE

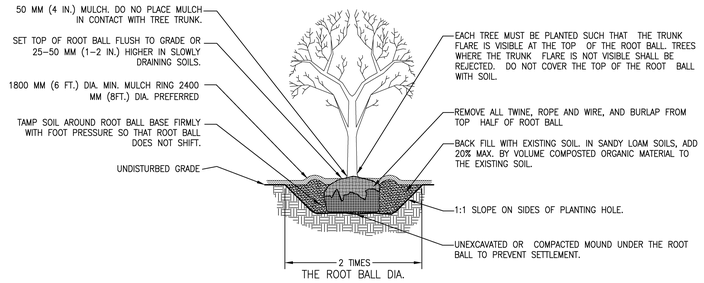

NOTE: DO NOT HEAVILY PRUNE THE TREE AT PLANTING. PRUNE ONLY CROSSOVER LIMBS, CO-DOMINANT LEADERS, AND BROKEN OR DEAD BRANCHES. SOME INTERIOR TWIGS AND LATERAL BRANCHES MAY BE PRUNED; HOWEVER, DO NOT REMOVE THE TERMINAL BUDS OF BRANCHES THAT EXTEND TO THE EDGE OF THE CROWN.

TREE PLANTING DETAIL — D1
NOT TO SCALE

NOTE:
1.) PLACE SILT FENCE OR FILTER BERMS ALONG UNIFORMLY SLOPED SURFACE.
2.) EROSION CONTROL MIX FILTER BERM MAY BE SUBSTITUTED FOR A SILTFENCE. SEE THE SITE GRADING AND EROSION CONTROL PLAN.

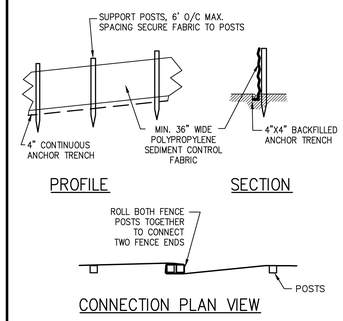

SILT FENCE — C3
NOT TO SCALE

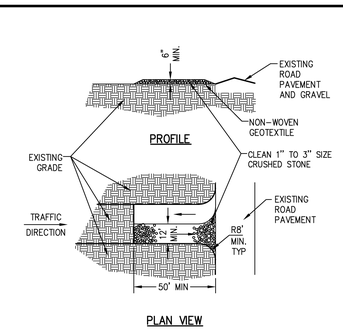

TEMP. STABILIZED CONSTRUCTION EXIT — C2
NOT TO SCALE

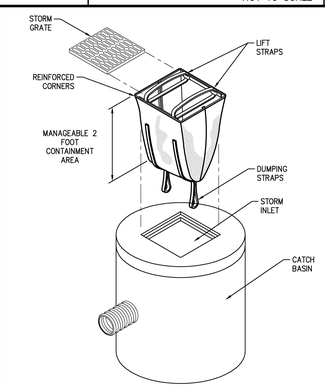

SEDIMENT FILTER SACK — C1
NOT TO SCALE

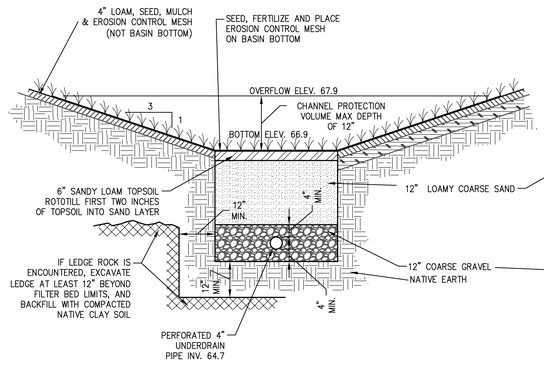

SOIL FOR 12" LOAMY COARSE SAND LAYER (MEDOT #703.01)	
SIEVE SIZE	% BY WEIGHT
3/8"	100
#4	95–100
#8	80–100
#16	50–85
#30	25–60
#50	10–30
#100	2–10
#200	0–5

COARSE GRAVEL MEDOT SPECIFICATIONS FOR UNDERDRAINS (MEDOT #703.22)	
SIEVE SIZE	% PASSING BY WEIGHT
UNDERDRAIN TYPE B	
1"	90–100
1/2"	75–100
#4	50–100
#20	15–80
#50	0–15
#200	0–5

VEGETATED UNDERDRAIN SOIL FILTER SECTION — B4
NOT TO SCALE

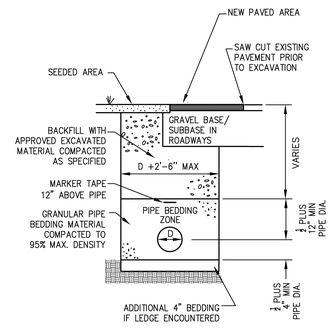

PIPE TRENCH — B3
NOT TO SCALE

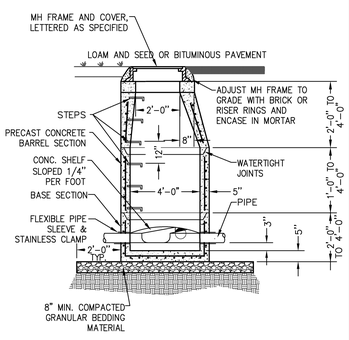

PRECAST CONCRETE MANHOLE — B2
NOT TO SCALE

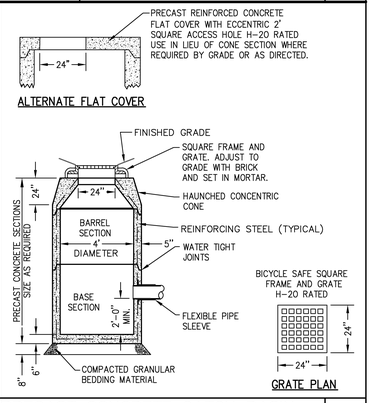

PRECAST CONCRETE CATCH BASIN — B1
NOT TO SCALE

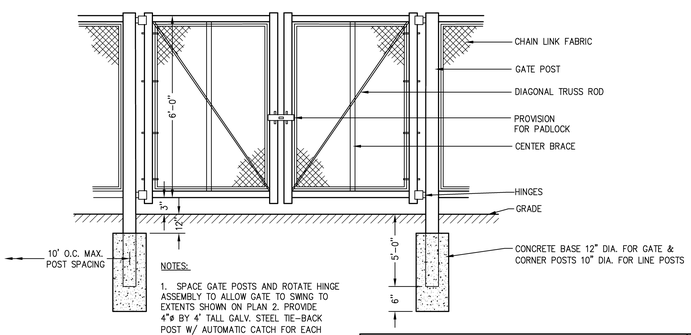

NOTES:
1. SPACE GATE POSTS AND ROTATE HINGE ASSEMBLY TO ALLOW GATE TO SWING TO EXTENTS SHOWN ON PLAN 2. PROVIDE 4"ø BY 4' TALL GALV. STEEL TIE-BACK POST W/ AUTOMATIC CATCH FOR EACH LEAF. PLACE IN 12" CONC. BASE AS SHOWN FOR FENCE POSTS.

CHAIN LINK GATE/FENCE — A5
NOT TO SCALE

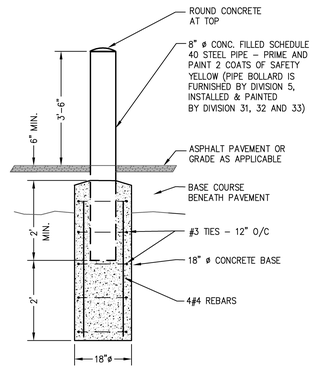

PIPE BOLLARD DETAIL — A4
NOT TO SCALE

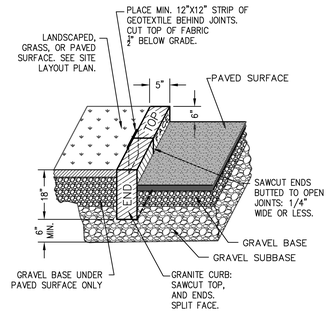

NOTE:
1. USE CURVED SECTIONS FOR CURB RADIUS OF 40' OR LESS.
2. SEE SPECIFICATIONS SECTION 2500 FOR FURTHER INFORMATION.

VERTICAL GRANITE CURBING: VGC — A3
NOT TO SCALE

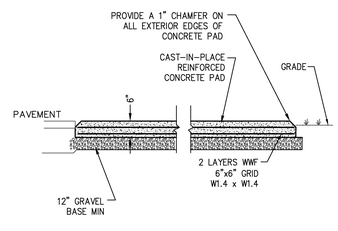

CONCRETE PAD — A2
NOT TO SCALE

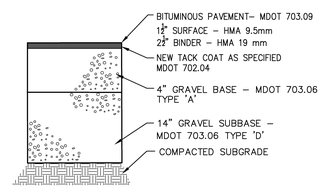

BITUMINOUS DRIVE & PARKING

BITUMINOUS PAVEMENT DETAILS — A1
NOT TO SCALE

HARRIMAN
AUBURN PORTLAND MANCHESTER

IMMUCELL CORPORATION ADDITION

PORTLAND, MAINE

Harriman Project No.	14326

Key Plan

Issues and Revisions

Mark	Date	Description
	05-22-14	PLANNING BOARD REVIEW

STATE OF MAINE — FRANK L. CRABTREE No. 3993 — LICENSED PROFESSIONAL ENGINEER

Drawing Dates

PA / PE: FLC
Drawn By: PLS

© 2014 Harriman Associates

SITE DETAILS

C7