CONSTRUCTION NOTES

1. ALL WORK SHALL CONFORM TO THE APPLICABLE CODES AND ORDINANCES.

2. CONTRACTOR SHALL VISIT THE SITE AND FAMILIARIZE HIM OR HERSELF WITH ALL CONDITIONS AFFECTING THE PROPOSED WORK AND SHALL MAKE PROVISIONS AS TO THE COST THEREOF. CONTRACTOR SHALL BE RESPONSIBLE FOR FAMILIARIZING HIM OR HERSELF WITH ALL CONTRACT DOCUMENTS, FIELD CONDITIONS AND DIMENSIONS AND CONFIRMING THAT THE WORK MAY BE ACCOMPLISHED AS SHOWN PRIOR TO PROCEEDING WITH CONSTRUCTION. ANY DISCREPANCIES SHALL BE BROUGHT TO THE ATTENTION OF THE ENGINEER PRIOR TO THE COMMENCEMENT OF WORK.

3. CONTRACTOR SHALL NOTIFY ENGINEER OF ALL PRODUCTS OR ITEMS NOTED AS "EXISTING" WHICH ARE NOT FOUND IN THE FIELD.

4. INSTALL ALL EQUIPMENT AND MATERIALS IN ACCORDANCE WITH MANUFACTURER'S RECOMMENDATIONS AND OWNER'S REQUIREMENTS UNLESS SPECIFICALLY OTHERWISE INDICATED OR WHERE LOCAL CODES OR REGULATIONS TAKE PRECEDENCE.

5. CONTRACTOR SHALL VERIFY ALL DIMENSIONS AND CONDITIONS IN THE FIELD PRIOR TO FABRICATION AND ERECTION OF ANY MATERIAL. ANY UNUSUAL CONDITIONS SHALL BE REPORTED TO THE ATTENTION OF THE ENGINEER.

6. CONTRACTOR SHALL CLEAN AND REMOVE DEBRIS AND SEDIMENT DEPOSITED ON PUBLIC STREETS, SIDEWALKS, ADJACENT AREAS, OR OTHER PUBLIC WAYS DUE TO CONSTRUCTION.

7. CONTRACTOR SHALL INCORPORATE PROVISIONS AS NECESSARY IN CONSTRUCTION TO PROTECT EXISTING STRUCTURES, PHYSICAL FEATURES, AND MAINTAIN SITE STABILITY DURING CONSTRUCTION. CONTRACTOR SHALL RESTORE ALL AREAS TO ORIGINAL CONDITION AND AS DIRECTED BY DESIGN DRAWINGS.

8. SITE CONTRACTOR SHALL OBTAIN ALL REQUIRED PERMITS PRIOR TO CONSTRUCTION.

9. ALL EROSION AND SEDIMENT CONTROL MEASURES SHALL BE INSTALLED IN ACCORDANCE WITH "MAINE EROSION AND SEDIMENT CONTROL BMPS" PUBLISHED BY THE BUREAU OF LAND AND WATER QUALITY OF THE MAINE DEPARTMENT OF ENVIRONMENTAL PROTECTION, MARCH 2003 OR LATEST EDITION. IT SHALL BE THE RESPONSIBILITY OF THE CONTRACTOR TO POSSESS A COPY OF THE EROSION CONTROL PLAN AT ALL TIMES.

10. THE CONTRACTOR IS HEREBY CAUTIONED THAT ALL SITE FEATURES SHOWN HEREON ARE BASED ON FIELD OBSERVATIONS BY THE SURVEYOR AND BY INFORMATION PROVIDED BY UTILITY COMPANIES. THE INFORMATION IS NOT TO BE RELIED ON AS BEING EXACT OR COMPLETE. THE CONTRACTOR SHALL CONTACT DIG SAFE (811) AT LEAST THREE (3) BUT NOT MORE THAN THIRTY (30) DAYS PRIOR TO COMMENCEMENT OF EXCAVATION OR DEMOLITION TO VERIFY HORIZONTAL AND VERTICAL LOCATION OF ALL UTILITIES.

11. CONTRACTOR SHALL BE AWARE THAT DIG SAFE ONLY NOTIFIES ITS "MEMBER" UTILITIES ABOUT THE DIG. WHEN NOTIFIED, DIG SAFE WILL ADVISE CONTRACTOR OF MEMBER UTILITIES IN THE AREA. CONTRACTOR IS RESPONSIBLE FOR IDENTIFYING AND CONTACTING NON-MEMBER UTILITIES DIRECTLY. NON-MEMBER UTILITIES MAY INCLUDE TOWN OR CITY WATER AND SEWER DISTRICTS AND SMALL LOCAL UTILITIES, AS WELL AS USG PUBLIC WORKS SYSTEMS.

12. CONTRACTORS SHALL BE RESPONSIBLE FOR COMPLIANCE WITH THE REQUIREMENTS OF 23 MRSA 3360-A. IT SHALL BE THE RESPONSIBILITY OF THE CONTRACTOR TO COORDINATE WITH THE APPROPRIATE UTILITIES TO OBTAIN AUTHORIZATION PRIOR TO RELOCATION OF ANY EXISTING UTILITIES WHICH CONFLICT WITH THE PROPOSED IMPROVEMENTS SHOWN ON THESE PLANS. IF A UTILITY CONFLICT ARISES, THE CONTRACTOR SHALL IMMEDIATELY NOTIFY THE OWNER, THE MUNICIPALITY AND APPROPRIATE UTILITY COMPANY PRIOR TO PROCEEDING WITH ANY RELOCATION.

13. ALL PAVEMENT MARKINGS AND DIRECTIONAL SIGNAGE SHOWN ON THE PLAN SHALL CONFORM TO THE MANUAL OF UNIFORM TRAFFIC CONTROL DEVICES (MUTCD) STANDARDS.

14. ALL PAVEMENT JOINTS SHALL BE SAWCUT PRIOR TO PAVING TO PROVIDE A DURABLE AND UNIFORM JOINT.

15. NO HOLES, TRENCHES OR STRUCTURES SHALL BE LEFT OPEN OVERNIGHT IN ANY EXCAVATION ACCESSIBLE TO THE PUBLIC OR IN PUBLIC RIGHTS-OF-WAY.

16. ALL WORK WITHIN THE PUBLIC RIGHT-OF-WAY SHALL REQUIRE A M.D.O.T. PERMIT AS WELL AS PERMITS FROM THE TOWN AS APPLICABLE.

17. THE PROPOSED LIMITS OF CLEARING SHOWN HEREON ARE APPROXIMATE BASED UPON THE PROPOSED LIMITS OF SITE GRADING. THE APPLICANT RESERVES THE RIGHT TO PERFORM NORMAL FOREST MANAGEMENT ACTIVITIES OUTSIDE OF THE CLEARING LIMIT AS SHOWN. TREE REMOVAL OUTSIDE OF THE LIMITS OF CLEARING MAY BE NECESSARY TO REMOVE DEAD OR DYING TREES OR TREE LIMBS. THIS REMOVAL IS DUE TO POTENTIAL SAFETY HAZARDS AND TO PROMOTE PROPER FOREST GROWTH.

18. IMMEDIATELY UPON COMPLETION OF CUTS/FILLS, THE CONTRACTOR SHALL STABILIZE DISTURBED AREAS IN ACCORDANCE WITH EROSION CONTROL NOTES AND AS SPECIFIED ON PLANS.

19. THE CONTRACTOR SHALL BE FULLY AND SOLELY RESPONSIBLE FOR THE REMOVAL, REPLACEMENT AND RECTIFICATION OF ALL DAMAGED AND DEFECTIVE MATERIAL AND WORKMANSHIP IN CONNECTION WITH THE CONTRACT WORK. THE CONTRACTOR SHALL REPLACE OR REPAIR AS DIRECTED BY THE OWNER ALL SUCH DAMAGED OR DEFECTIVE MATERIALS WHICH APPEAR WITHIN A PERIOD OF ONE YEAR FROM THE DATE OF SUBSTANTIAL COMPLETION.

20. ALL WORK PERFORMED BY THE GENERAL CONTRACTOR AND/OR TRADE SUBCONTRACTOR SHALL CONFORM TO THE REQUIREMENTS OF LOCAL, STATE OR FEDERAL LAWS, AS WELL AS ANY OTHER GOVERNING REQUIREMENTS, WHETHER OR NOT SPECIFIED ON THE DRAWINGS.

21. WHERE THE TERMS "APPROVED EQUAL", "OTHER APPROVED", "EQUAL TO", "ACCEPTABLE" OR OTHER GENERAL QUALIFYING TERMS ARE USED IN THESE NOTES, IT SHALL BE UNDERSTOOD THAT REFERENCE IS MADE TO THE RULING AND JUDGMENT OF SEBAGO TECHNICS, INC.

22. THE GENERAL CONTRACTOR SHALL PROVIDE ALL NECESSARY PROTECTION FOR THE WORK UNTIL TURNED OVER TO THE OWNER.

23. THE GENERAL CONTRACTOR SHALL MAINTAIN A CURRENT AND COMPLETE SET OF CONSTRUCTION DRAWINGS ON SITE DURING ALL PHASES OF CONSTRUCTION FOR USE OF ALL TRADES.

24. THE CONTRACTOR SHALL TAKE FULL RESPONSIBILITY FOR ANY CHANGES AND DEVIATION OF APPROVED PLANS NOT AUTHORIZED BY THE ARCHITECT/ENGINEER AND/OR CLIENT/OWNER.

25. DETAILS ARE INTENDED TO SHOW END RESULT OF DESIGN. ANY MODIFICATION TO SUIT FIELD DIMENSION AND CONDITION SHALL BE SUBMITTED TO THE ENGINEER FOR REVIEW AND APPROVAL PRIOR TO ANY WORK.

26. BEFORE THE FINAL ACCEPTANCE OF THE PROJECT, THE CONTRACTOR SHALL REMOVE ALL EQUIPMENT AND MATERIALS, REPAIR OR REPLACE PRIVATE OR PUBLIC PROPERTY WHICH MAY HAVE BEEN DAMAGED OR DESTROYED DURING CONSTRUCTION, CLEAN THE AREAS WITHIN AND ADJACENT TO THE PROJECT WHICH HAVE BEEN OBSTRUCTED BY HIS/HER OPERATIONS, AND LEAVE THE PROJECT AREA NEAT AND PRESENTABLE.

27. ALL SUBSURFACE UTILITY LINES SHOWN HEREON ARE BASED SOLELY ON THE FIELD LOCATION OF VISIBLE STRUCTURES, SMH'S, CB'S, HYDRANTS, ETC., IN CONJUNCTION WITH DESIGN AND OR AS-BUILT PLANS SUPPLIED TO SEBAGO TECHNICS INC. BY OTHERS. PRIOR TO ANY CONSTRUCTION, EXCAVATION, TEST BORINGS, DRILLING, ETC., DIG SAFE MUST BE NOTIFIED AND A SITE IDENTIFICATION NUMBER ALONG WITH A SAFE TO DIG DATE OBTAINED. THE SITE CONTRACTOR SHALL BE RESPONSIBLE FOR FIELD VERIFYING THE LOCATION, DEPTH AND MATERIAL OF ALL SUBSURFACE UTILITY LINES SHOWN HEREON AND ANY AND ALL OTHERS LOCATED ON SITE WITHIN THE CONSTRUCTION AREA.

INSPECTIONS/MONITORING:

1. MAINTENANCE MEASURES SHALL BE APPLIED AS NEEDED DURING THE ENTIRE CONSTRUCTION CYCLE. AFTER EACH RAINFALL, SNOW STORM OR PERIOD OF THAWING AND RUNOFF, OR AT LEAST EVERY SEVEN (7) DAYS, THE CONTRACTOR SHALL PERFORM A VISUAL INSPECTION OF ALL INSTALLED EROSION CONTROL MEASURES. THE CONTRACTOR SHALL PERFORM REPAIRS AS NEEDED TO ALLOW CONTINUED PROPER FUNCTIONING OF THE EROSION CONTROL MEASURE. THE CONTRACTOR SHALL PROVIDE THE NECESSARY REGULATING AGENCIES WITH WRITTEN DOCUMENTATION DESCRIBING DATES OF INSPECTIONS AND NECESSARY FOLLOW-UP WORK TO MAINTAIN EROSION CONTROL MEASURES MEETING THE REQUIREMENTS OF THIS PLAN.

2. FOLLOWING THE TEMPORARY AND/OR FINAL SEEDINGS, THE CONTRACTOR SHALL INSPECT THE WORK AREA SEMIMONTHLY UNTIL THE SEEDINGS HAVE BEEN ESTABLISHED. ESTABLISHED MEANS A MINIMUM OF 85%-90% OF AREAS VEGETATED WITH VIGOROUS GROWTH. RESEEDING SHALL BE CARRIED OUT BY THE CONTRACTOR WITH FOLLOW-UP INSPECTIONS IN THE EVENT OF ANY FAILURES UNTIL VEGETATION IS ADEQUATELY ESTABLISHED.

HOUSEKEEPING:

A. SPILL PREVENTION: CONTROLS MUST BE USED TO PREVENT POLLUTANTS FROM BEING DISCHARGED FROM MATERIALS ON-SITE, INCLUDING STORAGE PRACTICES TO MINIMIZE EXPOSURE OF THE MATERIALS TO STORMWATER, AND APPROPRIATE SPILL PREVENTION, CONTAINMENT, AND RESPONSE PLANNING AND IMPLEMENTATION.

B. GROUNDWATER PROTECTION: DURING CONSTRUCTION, LIQUID PETROLEUM PRODUCTS AND OTHER HAZARDOUS MATERIALS WITH THE POTENTIAL TO CONTAMINATE GROUNDWATER MAY NOT BE STORED OR HANDLED IN AREAS OF THE SITE DRAINING TO AN INFILTRATION AREA. AN "INFILTRATION AREA" IS ANY AREA OF THE SITE THAT BY DESIGN OR AS A RESULT OF SOILS, TOPOGRAPHY AND OTHER RELEVANT FACTORS, ACCUMULATES RUNOFF THAT INFILTRATES INTO THE SOIL. DIKES, BERMS, SUMPS, AND OTHER FORMS OF SECONDARY CONTAINMENT THAT PREVENT DISCHARGE TO GROUNDWATER MAY BE USED TO ISOLATE PORTIONS OF THE SITE FOR THE PURPOSES OF STORAGE AND HANDLING OF THESE MATERIALS.

C. FUGITIVE SEDIMENT AND DUST: ACTIONS MUST BE TAKEN TO INSURE THAT ACTIVITIES DO NOT RESULT IN NOTICEABLE EROSION OF SOILS OR FUGITIVE DUST EMISSIONS DURING OR AFTER CONSTRUCTION. OIL MAY NOT BE USED FOR DUST CONTROL.

D. DEBRIS AND OTHER MATERIALS: LITTER, CONSTRUCTION DEBRIS, AND CHEMICALS EXPOSED TO STORMWATER MUST BE PREVENTED FROM BECOMING A POLLUTANT SOURCE.

E. TRENCH DEWATERING: TRENCH DEWATERING IS THE REMOVAL OF WATER FROM TRENCHES, FOUNDATIONS, COFFERDAMS, PONDS, AND OTHER AREAS WITHIN THE CONSTRUCTION AREA THAT RETAIN WATER AFTER EXCAVATION. IN MOST CASES, THE COLLECTED WATER IS HEAVILY SILTED AND HINDERS CORRECT AND SAFE CONSTRUCTION PRACTICES. THE COLLECTED WATER MUST BE REMOVED FROM THE PONDED AREA, EITHER THROUGH GRAVITY OR PUMPING, AND MUST BE SPREAD THROUGH NATURAL WOODED BUFFERS OR REMOVED TO AREAS THAT ARE SPECIFICALLY DESIGNED TO COLLECT THE MAXIMUM AMOUNT OF SEDIMENT POSSIBLE, LIKE A COFFERDAM SEDIMENTATION BASIN. AVOID ALLOWING THE WATER TO FLOW OVER DISTURBED AREAS OF THE SITE. EQUIVALENT MEASURES MAY BE TAKEN IF APPROVED.

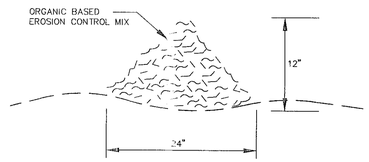

COMPOSITION

EROSION CONTROL MIX SHALL BE MANUFACTURED ON OR OFF THE PROJECT SITE SUCH THAT ITS COMPOSITION IS IN ACCORDANCE WITH THE MDEP MAINE EROSION AND SEDIMENT CONTROL BMP MANUAL, LAST REVISED 3/2003 OR LATER. IT MUST CONSIST PRIMARILY OF ORGANIC MATERIAL, SEPARATED AT THE POINT OF GENERATION, AND MAY INCLUDE: SHREDDED BARK, STUMP GRINDINGS, COMPOSTED BARK, OR ACCEPTABLE MANUFACTURED PRODUCTS. WOOD AND BARK CHIPS, GROUND CONSTRUCTION DEBRIS OR REPROCESSED WOOD PRODUCTS WILL NOT BE ACCEPTABLE AS THE ORGANIC COMPONENT OF THE MIX.

INSTALLATION:

1. THE BARRIER MUST BE PLACED ACROSS THE SLOPE, ALONG THE CONTOUR.
2. EXISTING GROUND SHALL BE PREPARED SUCH THAT THE BARRIER MAY LIE NEARLY FLAT ALONG THE GROUND TO AVOID THE CREATION OF VOIDS AND BRIDGES IN ORDER TO MINIMIZE THE POTENTIAL OF WASH OUTS UNDER THE BARRIER.
3. THE BARRIER SHALL BE A MINIMUM OF 1 FOOT HIGH (AS MEASURED ON THE UPHILL SIDE) AND 2 FEET WIDE FOR SLOPES LESS THAN 5% IN GRADE AND SHALL BE WIDER TO ACCOMMODATE THE ADDITIONAL RUNOFF
4. EROSION CONTROL MIX CAN BE INSTALLED WHERE SILT FENCE IS ILLUSTRATED ON THE DESIGN PLANS IN AREAS EXCEPT IN, BUT NOT LIMITED TO, THE FOLLOWING AREAS: WETLAND AREAS, AT POINTS OF CONCENTRATED FLOW, BELOW CULVERT OUTLET APRONS, AROUND CATCH BASINS AND CLOSED STORM SYSTEMS AND AT THE BOTTOM OF STEEP SLOPES THAT ARE MORE THAN 50 FEET FROM TOP TO BOTTOM.

EROSION CONTROL MIX BERM

NOT TO SCALE

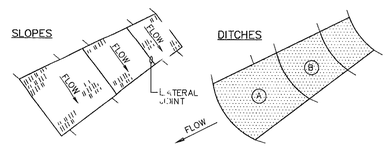

NOTES:

1. BURY THE TOP END OF THE MESH MATERIAL IN A 6" TRENCH AND BACKFILL AND TAMP TRENCHING SECURE END WITH STAPLES AT 6" SPACING, 4" DOWN FROM EXPOSED END.
2. FLOW DIRECTION JOINTS TO HAVE UPPER END OF LOWER STRIP BURIED WITH UPPER LAYERS OVERLAPPED 4" AND STAPLED. OVERLAP B OVER A.
3. LATERAL JOINTS TO HAVE 4" OVERLAP OF STRIPS. STAPLE 18" ON CENTER.
4. STAPLE OUTSIDE LATERAL EDGE 2' ON CENTER.
5. WIRE STAPLES TO BE MIN. OF # 11 WIRE 6" LONG AND 1-1/2" WIDE.
6. USE NORTH AMERICAN GREEN DS 150 OR APPROVED EQUAL.

EROSION CONTROL BLANKET

NOT TO SCALE

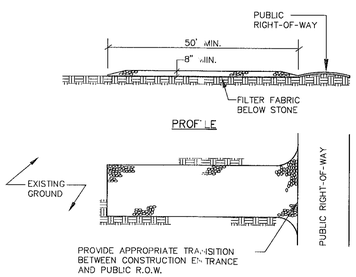

NOTES:

1. STONE SIZE- AASHTO DESIGNATION M43, SIZE NO. 2 (2 1/2" TO 1 1/2").
   USE CRUSHED STONE.
2. LENGTH- AS SHOWN ON PLANS. MIN. 50 FEET.
3. THICKNESS- NOT LESS THAN EIGHT (8) INCHES.
4. WIDTH- NOT LESS THAN FULL WIDTH OF ALL POINT OF INGRESS OR EGRESS.
5. MAINTENANCE- THE ENTRANCE SHALL BE MAINTAINED IN A CONDITION WHICH WILL PREVENT TRACKING OR FLOWING OF SEDIMENT ONTO PUBLIC RIGHT-OF-WAY. THIS MAY REQUIRE PERIODIC TOP DRESSING WITH ADDITIONAL STONE AS CONDITIONS DEMAND AND REPAIR AND/OR CLEANOUT OF ANY MEASURES USED TO TRAP SEDIMENT. ALL SEDIMENT SPILLED, DROPPED, WASHED OR TRACKED ONTO PUBLIC RIGHT-OF-WAY MUST BE REMOVED IMMEDIATELY.

STABILIZED CONSTRUCTION EXIT

NOT TO SCALE

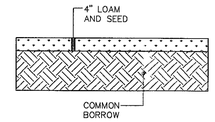

LOAM AND SEED SECTION

NOT TO SCALE

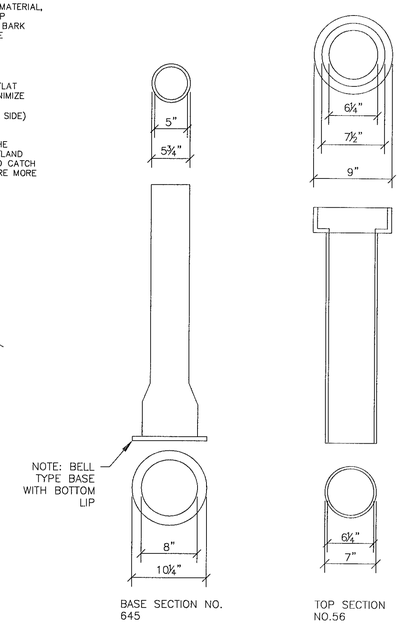

VALVE BOX & COVER

NOT TO SCALE

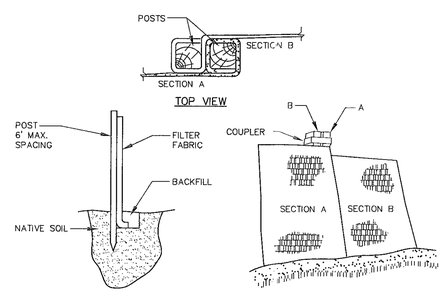

INSTALLATION NOTES:

1. EXCAVATE A 6"x 6" TRENCH ALONG THE LINE OF PLACEMENT FOR THE FILTER BARRIER.
2. UNROLL A SECTION AT A TIME AND POSITION THE POSTS AGAINST THE BACK (DOWNSTREAM) WALL OF THE TRENCH.
3. DRIVE POSTS INTO THE GROUND UNTIL APPROXIMATELY 2" OF FABRIC IS LYING ON THE TRENCH BOTTOM.
4. LAY THE TOE-IN FLAP OF FABRIC ONTO THE UNDISTURBED BOTTOM OF THE TRENCH, BACKFILL THE TRENCH AND TAMP THE SOIL. TOE-IN CAN ALSO BE ACCOMPLISHED BY LAYING THE FABRIC FLAP ON UNDISTURBED GROUND AND PILING AND TAMPING FILL AT THE BASE, BUT MUST BE ACCOMPANIED BY AN INTERCEPTION DITCH.
5. JOIN SECTION AS SHOWN ABOVE.
6. BARRIER SHALL BE MIRAFI SILT FENCE OR EQUAL.

FILTER BARRIER

NOT TO SCALE

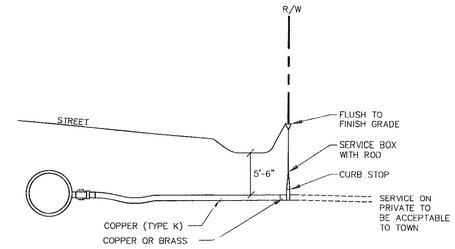

TYPICAL WATER SERVICE CONNECTION

NOT TO SCALE

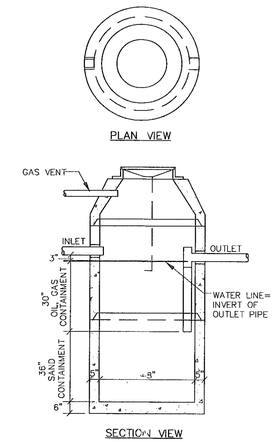

NOTES:

1. CONCRETE: 4,000 PSI AFTER 28 DAYS
2. REINFORCING: H-20 LOADING, 4x4/4x4 W.W.M.
3. SHIPLAP JOINTS SEALED WITH 1 STRIP OF BUTYL RUBBER SEALANT
4. EACH CASTING TO HAVE LIFTING PINS CAST IN.
5. 24" DIA. HEAVY DUTY FRAME & GRATE OR SOLID COVER (M248S)
6. PIPE OPENINGS CAST IN AS REQUIRED PIPING TO BE PROVIDED BY OTHERS.
7. LARGER DIAMETER STRUCTURES MAY ALSO BE UTILIZED.

SAND, OIL, WATER SEPARATOR

NOT TO SCALE

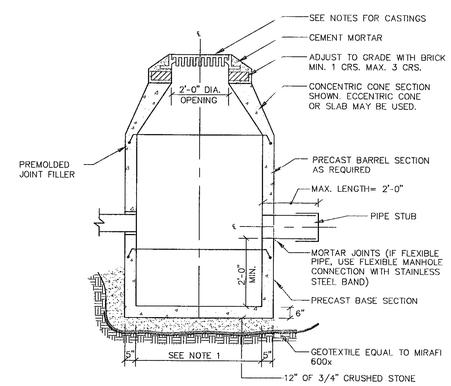

NOTES:

1. 4'-0" I.D. TYPICAL. SOME STRUCTURES MAY REQUIRE LARGER I.D. PROVIDE SHOP DRAWINGS.
2. DRAINAGE STRUCTURES TO BE DESIGNED FOR HS-25 LOADING.
3. PIPE SIZES AND INVERTS AS NOTED ON PLANS.
4. CATCH BASIN FRAME AND COVER TO BE EAST JORDAN "EJ", 5250 FRAME & COVER, TYPE M OR APPROVED EQUAL. PROVIDE DOUBLE GRATE WHERE INDICATED.
5. DRAINAGE MANHOLE FRAME AND GRATE TO BE EAST JORDAN "EJ" 1122 FRAME & COVER OR APPROVED EQUAL. COVER SHALL BE MARKED "DRAIN".

TYPICAL CATCH BASIN

NOT TO SCALE

NOT FOR CONSTRUCTION

STATE OF MAINE AMBER R. FEERLAND No. 15451 LICENSED PROFESSIONAL ENGINEER 11/30/18

AMBER R. FEERLAND, PE 15451

DESIGNED	CHECKED
ARF	PDO

REV.	BY:	DATE:	STATUS:
A	ARF	11/30/18	SITE PLAN TO CITY

THIS PLAN SHALL NOT BE MODIFIED WITHOUT WRITTEN PERMISSION FROM SEBAGO TECHNICS, INC. ANY ALTERATIONS, AUTHORIZED OR OTHERWISE, SHALL BE AT THE USER'S SOLE RISK AND WITHOUT LIABILITY TO SEBAGO TECHNICS, INC.

SEBAGO TECHNICS
WWW.SEBAGOTECHNICS.COM
75 John Roberts Rd.
Suite 4A
South Portland, ME 04106
Tel. 207-200-2100

DETAILS
OF:
PROPOSED WAREHOUSE BUILDING
2 EVERGREEN DRIVE
PORTLAND, MAINE
FOR:
ROB DERREY
2 EVERGREEN DRIVE
PORTLAND, ME 04101

PROJECT NO.	SCALE
18002	AS NOTED

SHEET 9 OF 11

18002D.dwg, TAB D2