KEY NOTES

1 PAINT VENT PIPES "EXTRA WHITE" SW7006.

2 PAINT VENT RACK, BOLLARDS AND ALL OTHER EXPOSED METALS "SEAL SKIN" SW7675.

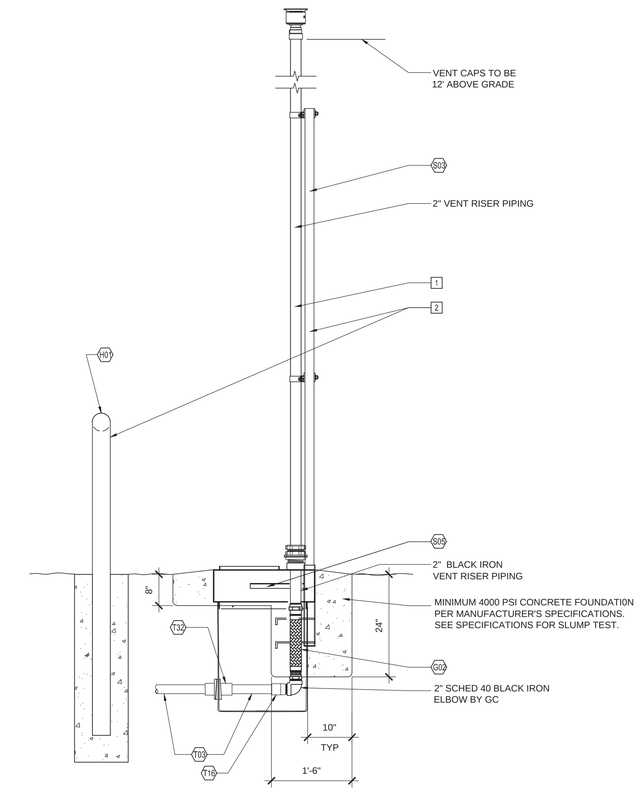

SIDE

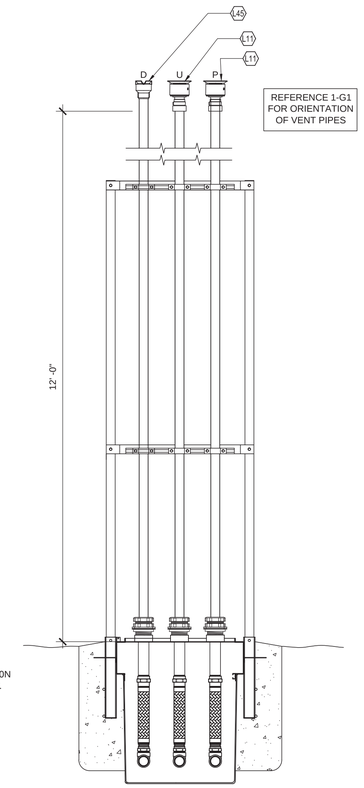

FRONT

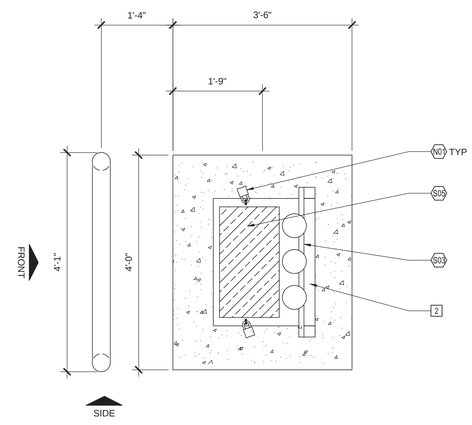

PLAN

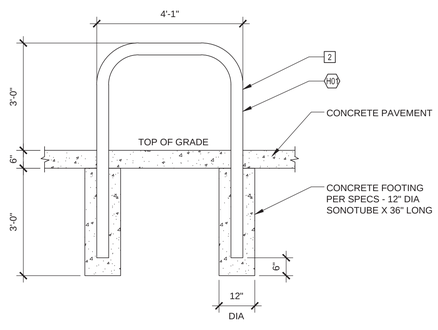

2 HOOP BOLLARD DETAIL
1/2"=1'-0"

1 TANK VENT RISER SECTIONS
3/4"=1'-0"

Rev. #	Date	Description

Proto 2nd Qtr 04-03-15

7-ELEVEN, INC.
3200 HACKBERRY ROAD, IRVING, TEXAS 75063

7-11 #32541
1917 FOREST AVE
PORTLAND, ME 04103

REMOTE VENT AND DETAILS

CORE STATES GROUP
1700 Industrial Drive, Suite B
Rogers, AR 72756
Phone: (479) 986-4400
FAX (479) 986-4401

Job#:	SEI-16380.0222
Scale:	AS NOTED
Date:	01/21/16
Drawn By:	JMR
Checked By:	CPS

Documents prepared by Core States Group are to be used only for the specific project and specific use for which they are intended. Any extension of use to other projects, by owner or any other party, without the expressed written consent of Core States Group is done at the user's own risk. If used in a way other than originally intended, user will hold Core States Group harmless from all claims and losses.

STATE OF MAINE
David M Lee
11818
LICENSED PROFESSIONAL ENGINEER
2.21.16

SHEET:
G6

FUELING - USA

PRINTED BY: KSTORLIE
DRAWING NAME: 32541 - G6 REMOTE VENT AND DETAILS.DWG
PRINT DATE: Feb 02, 2016 - 12:57pm