KEY NOTES

1. ELECTRICAL CONDUIT(S) TO ENTER SUMP 2" MIN ABOVE HIGHEST PRODUCT PENETRATION.
2. LOCATE ELECTRICAL JUNCTION BOX AT HIGHEST LOCATION IN SUMP RISER FOR EASY ACCESS FROM ABOVE.
3. SUMP SENSOR TO REST AT LOWEST POINT OF SUMP ENCLOSURE ON PRODUCT PIPING SIDE OF SUMP. TANK CONTRACTOR TO SUPPLY ALL BRACKETS AND CLAMPS FOR 2-POINT MOUNTING OF THE 2" FRP SLEEVE.
4. SET MANHOLE COVERS 1" ABOVE THE FINISH GRADE AND SLOPE CONCRETE AWAY FROM MANWAY COVERS AT 2% GRADE.
5. POSITION BALL VALVE FOR UNOBSTRUCTED USE OF SHUT-OFF HANDLE.

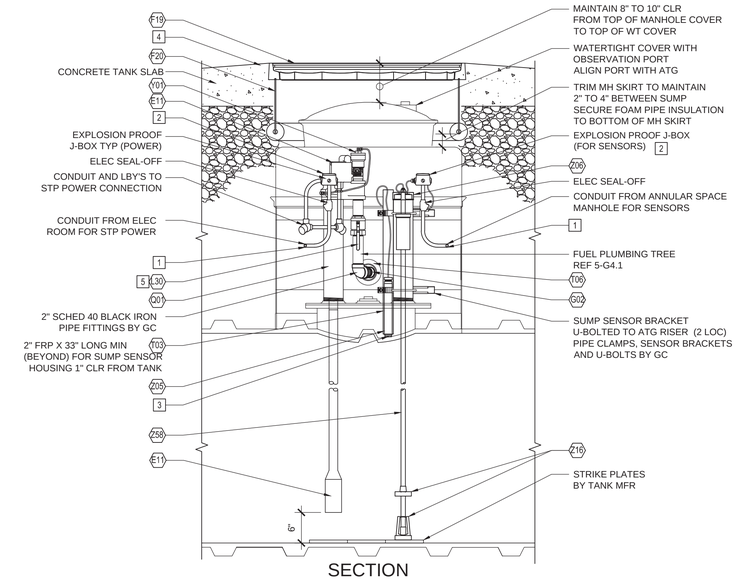

SECTION

ROTATE VIEW AS REQUIRED FOR FIELD CONDITION

ELECTRICAL PENETRATIONS INTO SUMP ARE SHOWN FOR REFERENCE ONLY - COORDINATE LOCATIONS WITH SHEET G9 AND FIELD CONDITIONS

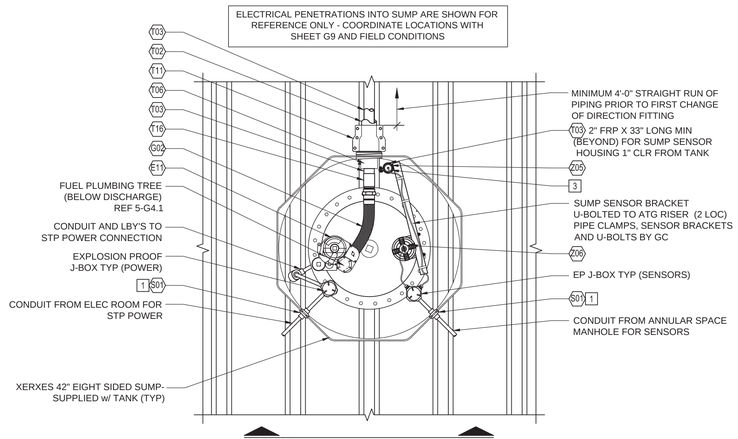

PLAN

2 DIESEL STP SUMP DETAILS

3/4"=1'-0"

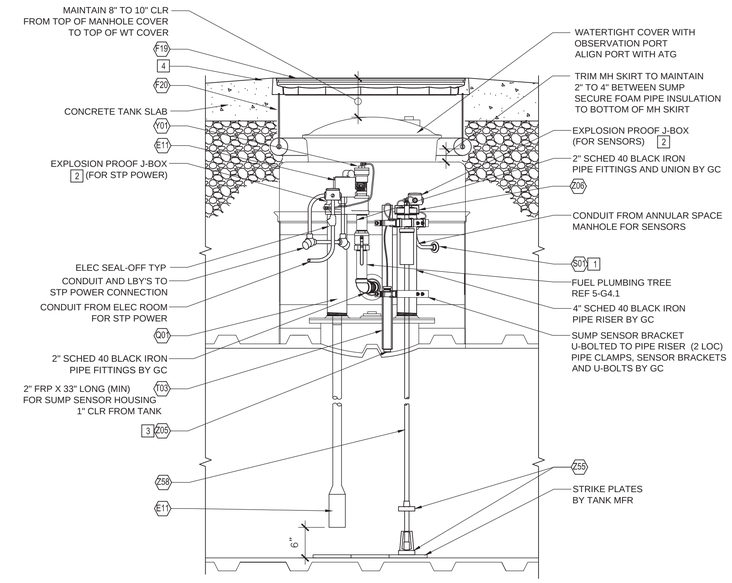

SECTION

ROTATE VIEW AS REQUIRED FOR FIELD CONDITION

ELECTRICAL PENETRATIONS INTO SUMP ARE SHOWN FOR REFERENCE ONLY - COORDINATE LOCATIONS WITH SHEET G9 AND FIELD CONDITIONS

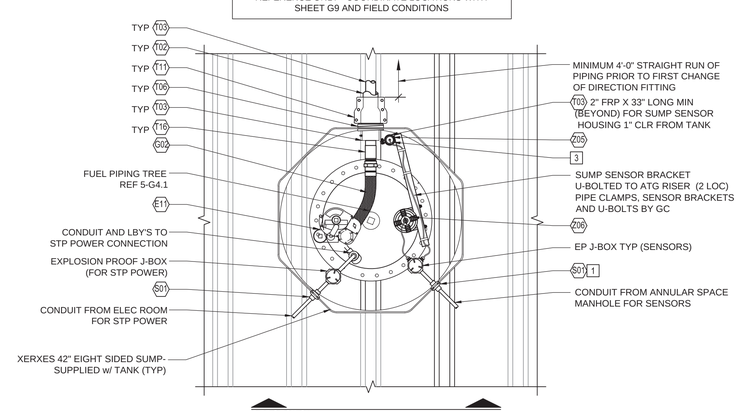

PLAN

1 REGULAR AND PREMIUM STP SUMP DETAILS

3/4"=1'-0"

Rev. #	Date	Description

Proto 2nd Qtr 04-03-15

7-ELEVEN, INC.
3200 HACKBERRY ROAD, IRVING, TEXAS 75063

7-11 #32541
1917 FOREST AVE
PORTLAND, ME 04103

TANK SUMP DETAILS

CORE STATES GROUP
1700 Industrial Drive, Suite B
Rogers, AR 72756
Phone: (479) 986-4400
FAX (479) 986-4401

Job#:	SEI-16380.0222
Scale:	AS NOTED
Date:	01/21/16
Drawn By:	JMR
Checked By:	CPS

Documents prepared by Core States Group are to be used only for the specific project and specifically authorized by us. Any extension of use to other projects, by owner or any other party, without the express written consent of Core States Group is done at the user's own risk. If used in a manner other than that originally intended, user will hold Core States Group harmless from all claims and losses.

STATE OF MAINE
David M Lee
11818
LICENSED PROFESSIONAL ENGINEER
2-2-16

SHEET:
G4

PRINTED BY: KSTORLIE
DRAWING NAME: 32541 - G4 TANK SUMP DETAILS.DWG
PRINT DATE: Feb 02, 2016 - 12:56pm