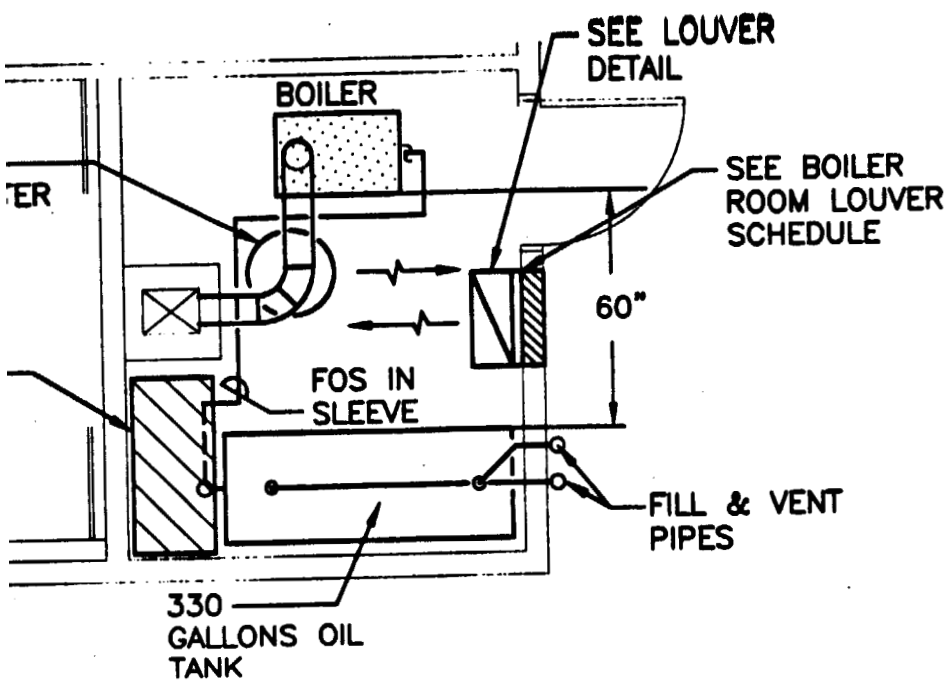

BOILER ROOM "C" PLAN

SCALE: 1/4"=1'-0"

BOILER ROOM SCHEDULE

	COMB./VENT AIR LOUVER										
	MINIMUM FREE AREA	MIN.	NO.	BOILER(S)	GPH PER	ELEC. PER BURNER	BOILER	COMBINED	MINIMUM	WATER HEATER SIZE	EXPANSION TANK SIZE

project name

townhouses @ ocean east

presumpscot st.
portland, me.

ocean east
of portland, l.l.c

goduti/thomas architects
44 oak st.
portland, maine 04101
ph. 207-775-3184
fax 207-774-0846

russell a martin, pe, pa
mechanical engineer
6 whispering pines
freeport, maine 04032
ph. 207-865-0753
fax 207-865-0753