Date: 10/14/14

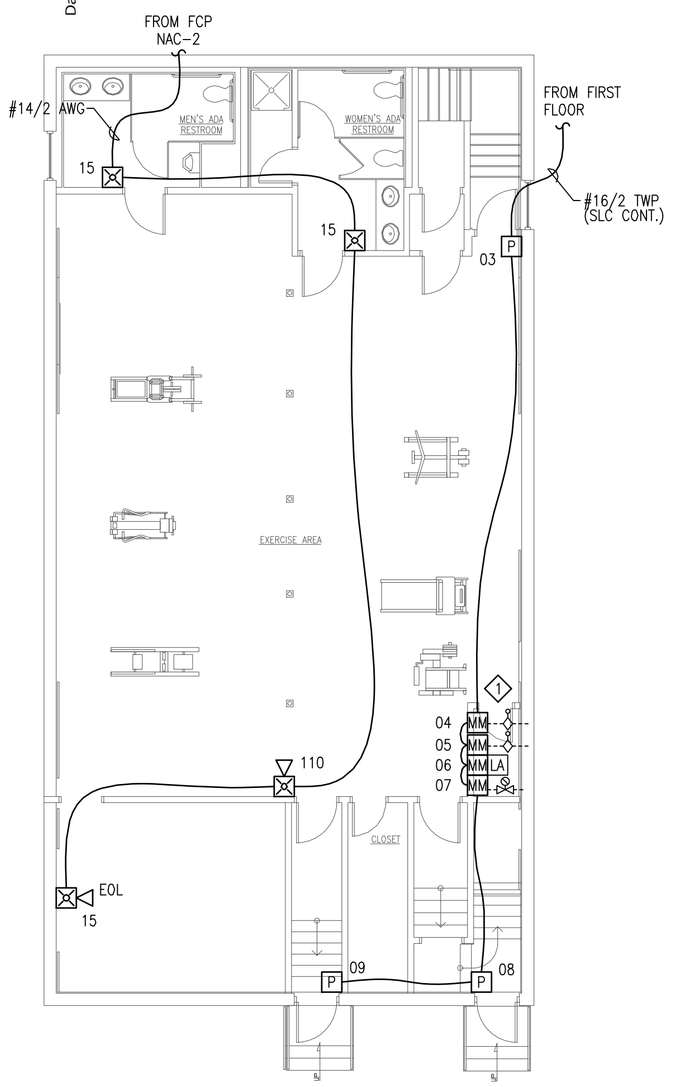

BASEMENT FIRE ALARM PLAN

SCALE: 1/8"=1'-0"

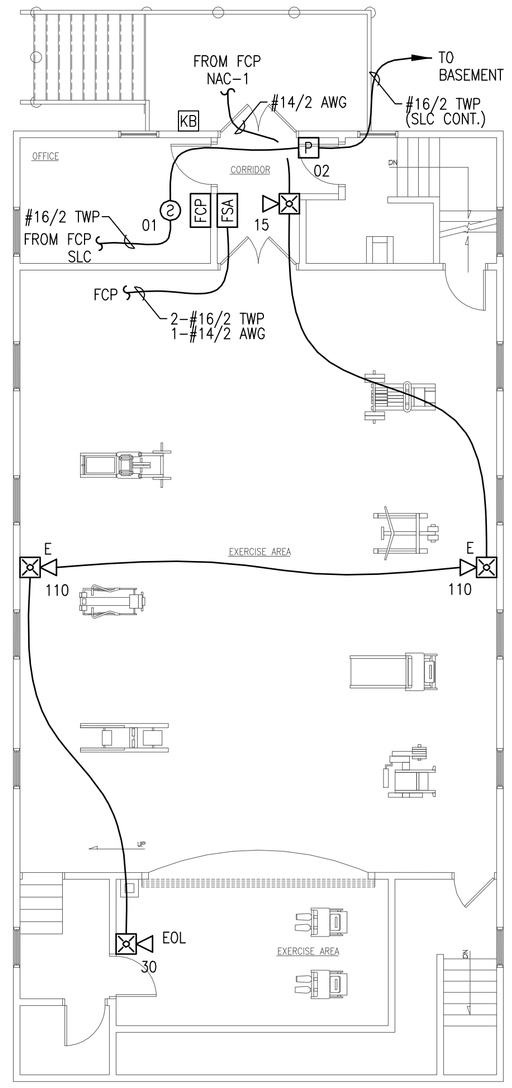

FIRST FLOOR FIRE ALARM PLAN

SCALE: 1/8"=1'-0"

GENERAL NOTES:

1. THESE DRAWINGS ARE DIAGRAMMATIC. REFER TO THE ARCHITECTURAL DRAWINGS FOR EXACT DIMENSIONS.
2. INSTALLATION SHALL COMPLY WITH NEC, NFPA 72 AND ALL OTHER APPLICABLE CODES AS REQUIRED BY THE LOCAL AUTHORITY HAVING JURISDICTION.
3. WIRING DEPICTED ON THESE PLANS IS SCHEMATIC – ACTUAL WIRE LOCATIONS MAY DIFFER FROM THESE PLANS. WIRING SHALL BE PERFORMED AS ACTUAL BUILDING CONSTRUCTION CONDITIONS ALLOW AND TO MINIMIZE PENETRATIONS THROUGH AREA SEPARATION WALLS AND FIRE WALLS. THE USE OF A RACEWAY IS PERMITTED AS LONG AS NO 110V OR HIGHER VOLTAGE CABLES ARE IN THE SAME RACEWAY.
4. FIRE RATINGS SHALL BE MAINTAINED FOR ALL PENETRATIONS THROUGH FIRE-RATED CONSTRUCTION.
5. POWER FOR ALL FIRE ALARM PANELS AND FIRE ALARM POWER SUPPLIES MUST BE PROVIDED BY A DEDICATED AC BRANCH CIRCUIT.
6. POWER-LIMITED AND NONPOWER-LIMITED CIRCUIT WIRING MUST REMAIN SEPARATED IN CABINET. ALL POWER-LIMITED CIRCUIT WIRING MUST REMAIN AT LEAST 0.25" AWAY FROM ANY NONPOWER-LIMITED CIRCUIT WIRING. FURTHERMORE, ALL POWER-LIMITED AND NONPOWER-LIMITED CIRCUIT WIRING MUST ENTER AND EXIT THE CABINET THROUGH DIFFERENT KNOCK OUTS AND/OR SEPARATE CONDUITS.
7. WHEN UTILIZING CLASS "A" CIRCUITS, SEPARATE OUTGOING AND RETURN CONDUCTORS OF CLASS "A" CIRCUITS BY A MINIMUM OF 12" WHERE RUN VERTICALLY AND 48" WHERE RUN HORIZONTALLY.
8. WHEN UTILIZING SHIELDED CABLE TIE SHIELDS THROUGH AND INSULATE AT EACH JUNCTION BOX. INSULATE AND TAPE BACK AT END.
9. ALL FIRE ALARM CABLING SHALL BE ACCEPTABLE TO THE FIRE ALARM EQUIPMENT MANUFACTURER FOR THE INTENDED PURPOSE.
10. SMOKE DETECTORS SHALL NOT BE INSTALLED UNTIL AFTER CONSTRUCTION CLEAN-UP IS COMPLETED AND FINAL.
11. LOCATE SMOKE DETECTORS A MINIMUM OF THREE (3) FEET FROM MECHANICAL DIFFUSERS. WALL-MOUNTED SMOKE DETECTORS SHALL BE LOCATED A MINIMUM OF 4" AND A MAXIMUM OF 12" FROM CEILING. CEILING-MOUNTED SMOKE DETECTORS SHALL BE MOUNTED ON CEILINGS AND NOT ON THE BOTTOMS OF BEAMS OR JOISTS.
12. PROVIDE SYNCHRONIZATION OF ALL VISUAL NOTIFICATION APPLIANCE CIRCUITS. PROVIDE ALL REQUIRED SYNC MODULES. PROVIDE A MULTI-SYNC MODE SLAVE CONNECTION BETWEEN ALL SYNC MODULES.
13. VERIFY ALL FIELD SELECTABLE AUDIBILITY SETTINGS OF NOTIFICATION APPLIANCES WITH FIRE ALARM CONTRACTOR.
14. UPON COMPLETION OF THE FIRE ALARM SYSTEM INSTALLATION AND PROGRAMMING, THE INSTALLING CONTRACTOR SHALL PERFORM FINAL TESTING OF THE ENTIRE SYSTEM, PER ALL APPLICABLE CODES, AND SHALL COORDINATE AND PERFORM A FINAL FIRE ALARM SYSTEM INSPECTION.
15. PROVIDE OFF-SITE MONITORING AS REQUIRED BY THE INTERNATIONAL FIRE CODE, SECTION 907.15 AND THE LOCAL AUTHORITY HAVING JURISDICTION.
16. INSTALLING CONTRACTOR SHALL, PHYSICALLY, LABEL ALL INITIATING DEVICES AND NOTIFICATION APPLIANCE CIRCUIT END OF LINE (WHEN WIRING CLASS "B"). THESE LABELS SHALL BE IN PLACE PRIOR TO START-UP AND TESTING.

SHEET NOTES:

1. ADDRESSABLE MONITOR MODULE(S) PROVIDED TO MONITOR ALL WATER FLOW, PRESSURE SWITCHES, TAMPER SWITCHES AND POST INDICATING VALVES ASSOCIATED WITH THE FIRE SPRINKLER SYSTEM. INSTALLING CONTRACTOR SHALL FIELD VERIFY EXACT MOUNTING, CIRCUITING AND PROGRAMMING REQUIREMENTS. FIELD VERIFY EXACT QUANTITY AND LOCATION(S).

FIRE ALARM SYMBOL LEGEND

NOTE: ALL SYMBOLS MAY NOT BE USED ON THIS PROJECT

SYMBOL	DESCRIPTION	MOUNTING
FCP	FIRE ALARM CONTROL PANEL	WALL-TOP @ 66"
FPS	FIRE ALARM POWER SUPPLY	FIELD VERIFY
FSA	FIRE SYSTEM ANNUNCIATOR	WALL-TOP @ 66"
FSD	FIRE/SMOKE DAMPER	BY OTHERS
	SMOKE DETECTOR	CEILING
	DUCT SMOKE DETECTOR	BY OTHERS
	HEAT DETECTOR	CEILING
CM	ADDRESSABLE CONTROL MODULE	FIELD VERIFY
MM	ADDRESSABLE MONITOR MODULE	FIELD VERIFY
P	MANUAL PULL STATION	WALL @ 48"
R	CONTROL RELAY (MULTI-VOLTAGE)	FIELD VERIFY
RM	ADDRESSABLE RELAY MODULE	FIELD VERIFY
	MAGNETIC DOOR HOLDER	FIELD VERIFY
	WATER FLOW SWITCH	BY OTHERS
	VALVE TAMPER SWITCH	BY OTHERS
LA	LOW AIR PRESSURE SWITCH	BY OTHERS
	BELL	BY OTHERS
	CEILING MOUNT STROBE	FIELD VERIFY
H	CEILING MOUNT HORN / STROBE	FIELD VERIFY
S	CEILING MOUNT SPEAKER / STROBE	FIELD VERIFY
	HORN	WALL @ 10'-0
	HORN / STROBE	WALL 80"-96"
SS	SPEAKER / STROBE	WALL 80"-96"
SP	SPEAKER	WALL @ 90"
	STROBE	WALL 80"-96"
KB	KNOX BOX	FIELD VERIFY

ABBREVIATION	DESCRIPTION
E	EXISTING
G	WITH GUARD
P	PENDENT MOUNT
R	RESIDENTIAL (110V)
S	SOUNDER BASE
WP	WEATHER PROOF
EOL	END OF LINE RESISTOR
EOLR	END OF LINE RELAY
AWG	AMERICAN WIRE GAUGE
TWP	TWISTED PAIR
TWSP	TWISTED SHIELDED PAIR
FPLP	FIRE POWER LIMITED PLENUM
FPLR	FIRE POWER LIMITED RISER

STROBE CANDELA 30

DEVICE ADDRESS: L1D001 OR D01 (L – DENOTES LOOP #) (D or M – DENOTES DETECTOR OR MODULE #)

1-#16/2 TWP: WIRE TYPE ABBREVIATED; CONDUCTOR COUNT; WIRE SIZE; # OF CABLES (IF OMITTED ONLY 1 CABLE NEEDED)

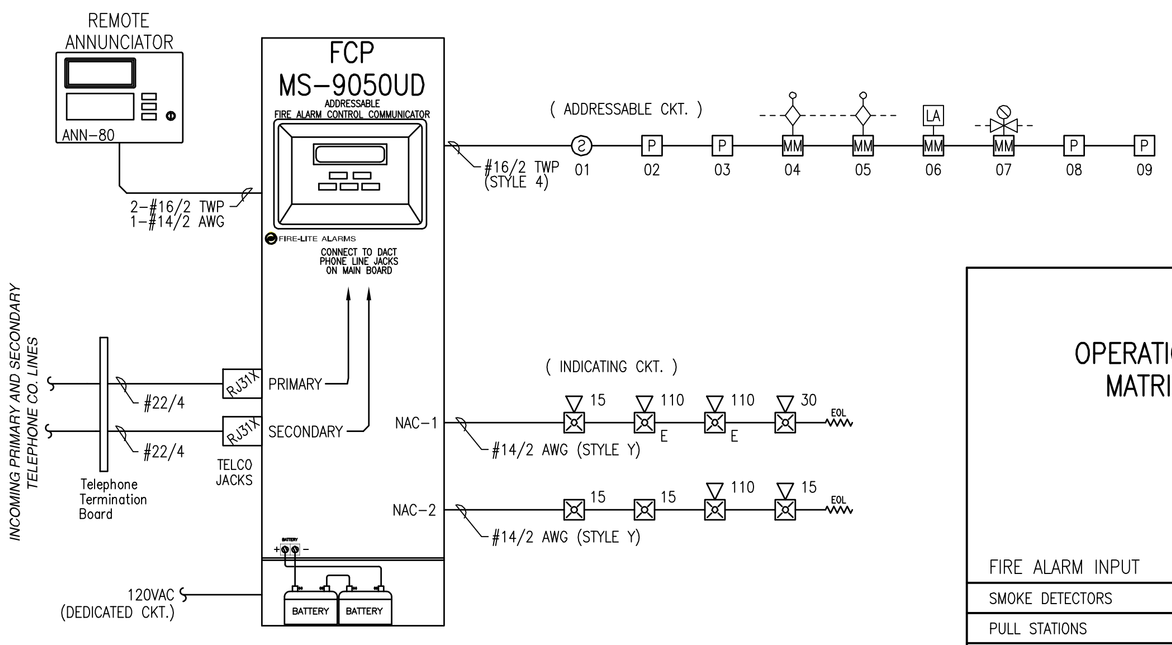

FIRE ALARM RISER DIAGRAM

SCHEMATIC: NO SCALE

OPERATIONS MATRIX

FIRE ALARM INPUT	FIRE ALARM OUTPUT: ACTIVATE ALARM INDICATOR	ACTIVATE AUDIBLE ALARM	ACTIVATE SUPERVISORY INDICATOR	ACTIVATE AUDIBLE SUPERVISORY SIGNAL	ACTIVATE TROUBLE INDICATOR	ACTIVATE AUDIBLE TROUBLE INDICATOR	TRANSMIT ALARM SIGNAL	TRANSMIT SUPERVISORY SIGNAL	TRANSMIT TROUBLE SIGNAL
SMOKE DETECTORS	●	●					●		
PULL STATIONS	●	●					●		
WATERFLOW SWITCHES	●	●					●		
VALVE TAMPER SWITCHES			●	●				●	
LOW AIR PRESSURE SWITCH			●	●				●	
FIRE ALARM AC POWER FAIL					●	●			●
FIRE ALARM LOW BATTERY					●	●			●
OPEN CIRCUIT					●	●			●
GROUND FAULT					●	●			●
NAC SHORT CIRCUIT					●	●			●
LOSS OF AC TO BUILDING					●	●			●

FCP Battery Calculation

10/1/2014

PROJECT NAME: 1854 FOREST AVENUE
Required Standby Time: 24 Hours
Required Alarm Time: 5 Minutes

Regulated Load in Standby

Device Type	Number of Devices		Current (Amps)		Total Current (Amps)
MS-9050UD Main Circuit Board	1	X	0.12000	=	0.12000
ANN-80 Remote Annunciator	1	X	0.01500	=	0.01500
SD355 Smoke Detector	1	X	0.00030	=	0.00030
BG-12LX Pull Stations	4	X	0.00023	=	0.00092
MMF-300 Monitor Modules	4	X	0.00040	=	0.00160
TOTAL STANDBY LOAD					0.13782

Regulated Load in ALARM

Device Type	Number of Devices		Current (Amps)		Total Current (Amps)
MS-9050UD Main Circuit Board	1	X	0.20000	=	0.20000
ANN-80 Remote Annunciator	1	X	0.04000	=	0.04000
All Addressable Devices – Maximum Draw	1	X	0.40000	=	0.40000
NAC-1	1	X	0.61000	=	0.61000
NAC-2	1	X	0.42300	=	0.42300
TOTAL ALARM LOAD					1.67300

Battery Requirements

Standby Load			Required Standby Time in Hours		
Current (Amps)	0.13782	X	24.00000	=	3.30768
Alarm Load			Required Alarm Time in Hours		
Current (Amps)	1.67300	X	0.08333	=	0.13942
Total Ampere Hours (before derating factor)					3.44710
Derating Factor				X	1.2
TOTAL AMPERE HOURS REQUIRED				=	4.13652
BATTERIES TO BE PROVIDED (2 – 12v)					7 AH

NAC Circuit Voltage Drop Calculation — 2/23/2012

Project Name	1854 FOREST AVENUE			
Circuit Number	NAC-1			
Nominal System Voltage	20.4	volts	Wire Gauge	Resistance Per 1000
Minimum Device Voltage	16	volts		
Distance from source to 1st device	8		14	6.14
Wire Gauge for balance of circuit			14	6.14
Max Output Current	1.0	amps		
Total Circuit Current	0.610	amps		

Circuit is within limits	Device Current	Distance previous device	Voltage at Device	Drop from source	Percent Drop
Device 1	0.079		20.37	0.03	0%
Device 2	0.212	43	20.23	0.17	1%
Device 3	0.212	36	20.16	0.24	1%
Device 4	0.107	37	20.14	0.26	1%
Totals	0.610	124			

NAC Circuit Voltage Drop Calculation — 2/23/2012

Project Name	1854 FOREST AVENUE			
Circuit Number	NAC-2			
Nominal System Voltage	20.4	volts	Wire Gauge	Resistance Per 1000
Minimum Device Voltage	16	volts		
Distance from source to 1st device	23		14	6.14
Wire Gauge for balance of circuit			14	6.14
Max Output Current	1.0	amps		
Total Circuit Current	0.423	amps		

Circuit is within limits	Device Current	Distance previous device	Voltage at Device	Drop from source	Percent Drop
Device 1	0.066		20.34	0.06	0%
Device 2	0.066	24	20.29	0.11	1%
Device 3	0.212	47	20.20	0.20	1%
Device 4	0.079	26	20.19	0.21	1%
Totals	0.423	120			

shop drawings created by:
5794 W. 4600 So.,
Hooper, UT 84315
Office: 801.985.0410
Fax: 801.704.0410
UNICAD Inc.
www.unicad.net
Fire Alarm Design & Drafting Services

REVISION	DESCRIPTION	DATE
0	ISSUED FOR REVIEW & APPROVAL	2/23/2012
1	REVISED PER CLIENT MARK UP	10/2/2014

CUNNINGHAM
Security Systems
10 Princes Point Road, Yarmouth, Maine 04096
Office: 207.846.3350 • Fax: 207.846.6080

1854 FOREST AVENUE
PORLAND, ME 04103

FIRE ALARM PLAN

DRAWN	JPB UNICAD JOB #12058
CHECKED	WAYNE B. HAWS NICET IV 90496
DATE	2/22/2012
REVISION	1
SCALE	1/8" = 1'-0"

FA-1