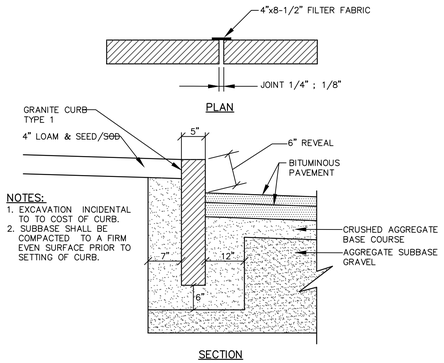

NOTES:
1. EXCAVATION INCIDENTAL TO TO COST OF CURB.
2. SUBBASE SHALL BE COMPACTED TO A FIRM EVEN SURFACE PRIOR TO SETTING OF CURB.

VERTICAL GRANITE CURB
(BID ALTERNATE NO.2)

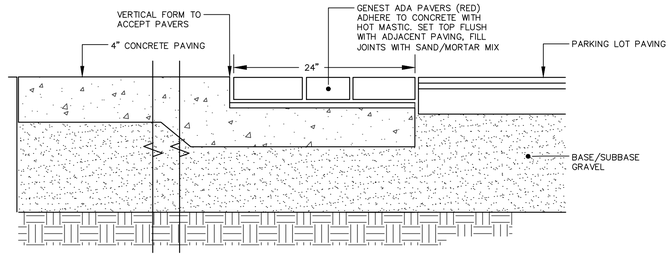

TRUNCATED DOMES AT CROSSWALKS
NOT TO SCALE

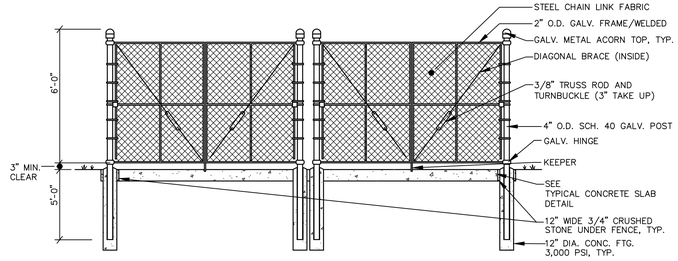

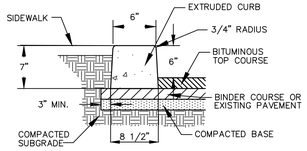

NOTE:
USE SLOPED MOLD WHEREVER CURB ABUTS LANDSCAPE AREAS.

SLIPFORM CONCRETE CURB
NOT TO SCALE

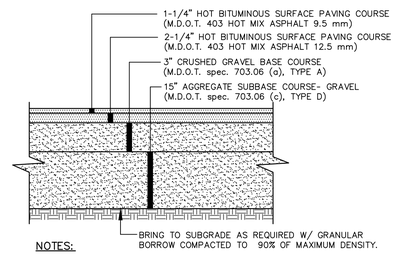

NOTES:
1. COMPACT GRAVEL SUBBASE, BASE COURSE TO 92% OF MAXIMUM DENSITY USING HEAVY ROLLER COMPACTION.
2. CONTRACTOR SHALL SET GRADE STAKES MARKING SUBBASE AND FINISH GRADE ELEVATIONS FOR CONSTRUCTION REFERENCE.

TYP. PAVED PARKING LOT/DRIVEWAY SECTION
NOT TO SCALE

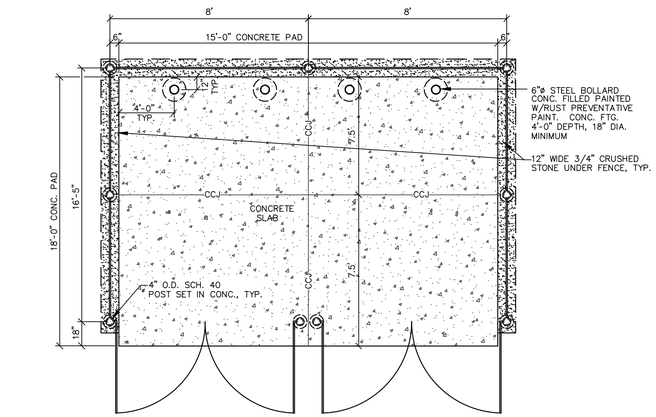

TYPICAL DUMPSTER ENCLOSURE
NOT TO SCALE

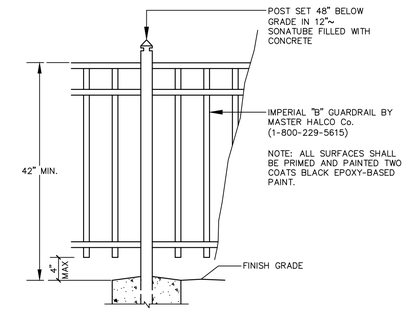

PEDESTRIAN GUARDRAIL (ALUMINUM TUBING)
NOT TO SCALE

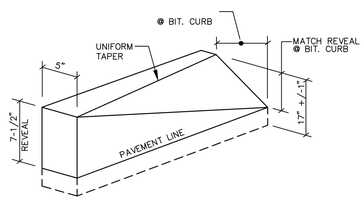

VERTICAL TO SLOPED CURB TRANSITION STONES
NOT TO SCALE

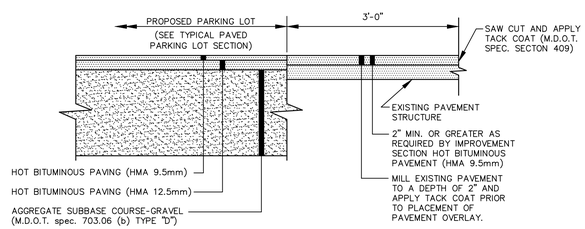

TYPICAL PAVEMENT JOINT
NOT TO SCALE

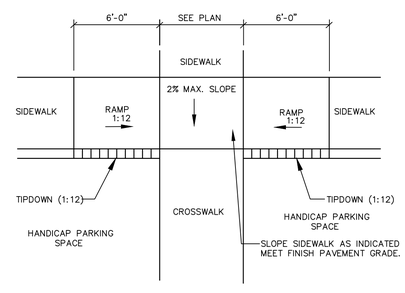

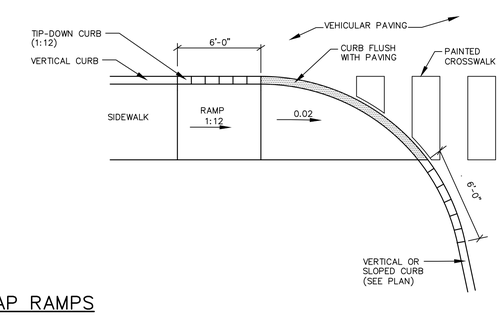

HANDICAP RAMPS
NOT TO SCALE

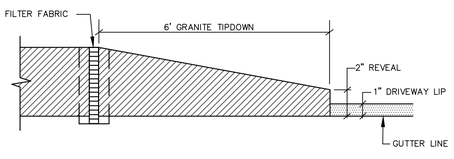

TYPICAL TIPDOWN CURB INSTALLATION
NOT TO SCALE

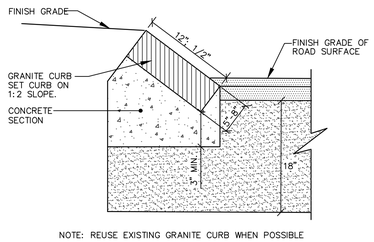

NOTE: REUSE EXISTING GRANITE CURB WHEN POSSIBLE

SLOPED GRANITE CURB (6x12)
NOT TO SCALE

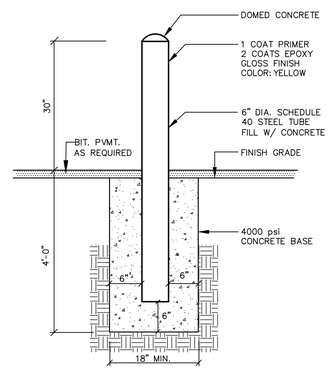

METAL BOLLARD
NOT TO SCALE

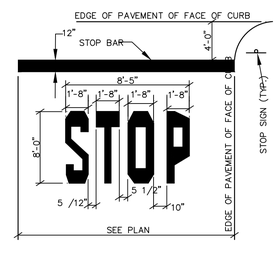

NOTE:
1. WORDS AND ARROWS FOR DRIVEWAYS SHALL BE APPLIED ACCORDING TO REQUIREMENTS AS OUTLINED IN SECTION 3B OF THE MANUAL ON UNIFORM TRAFFIC CONTROL DEVICES FOR STREETS AND HIGHWAYS.

2. THESE WORDS AND BAR ARE TO BE PAINTED REFLECTIVE WHITE.

STOP BAR
NOT TO SCALE

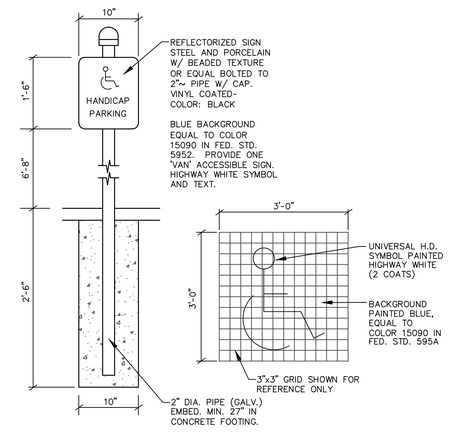

HANDICAP SIGNS
NOT TO SCALE

DESIGNED	CHECKED
SAH	RLM

REV:	BY:	DATE:	STATUS:
A	RLM	9/10/18	SUMBIT TO CITY OF PORTLAND

THIS PLAN SHALL NOT BE MODIFIED WITHOUT WRITTEN PERMISSION FROM SEBAGO TECHNICS, INC. ANY ALTERATIONS, AUTHORIZED OR OTHERWISE, SHALL BE AT THE USER'S SOLE RISK AND WITHOUT LIABILITY TO SEBAGO TECHNICS, INC

SEBAGO TECHNICS
WWW.SEBAGOTECHNICS.COM
75 John Roberts Rd.
Suite 4A
South Portland, ME 04106
Tel. 207-200-2100

DETAILS
OF:
PINE STATE FAMILY MART
1884 FOREST AVENUE
PORTLAND, MAINE 04103
FOR:
JOHN CHAU
75 ARCADIA ST.
PORTLAND, MAINE 04103

PROJECT NO.	SCALE
11142	NTS

11142D.dwg, TAB:D2