EROSION CONTROL MEASURES:

PRE-CONSTRUCTION PHASE

PRIOR TO THE BEGINNING OF ANY CONSTRUCTION, SEDIMENT BARRIERS (SILT FENCE) WILL BE STAKED/INSTALLED ACROSS THE SLOPE(S), ON THE CONTOUR AT OR JUST BELOW THE LIMITS OF CLEARING OR GRUBBING, AND/OR JUST ABOVE ANY ADJACENT PROPERTY LINE OR WATERCOURSE TO PROTECT AGAINST CONSTRUCTION RELATED EROSION. THE PLACEMENT OF SEDIMENT BARRIERS SHALL BE COMPLETED IN ACCORDANCE WITH GUIDELINES ESTABLISHED IN BEST MANAGEMENT PRACTICES AND IN ACCORDANCE WITH THIS EROSION CONTROL PLAN AND DETAILS IN THIS PLAN SET. THIS NETWORK IS TO BE MAINTAINED BY THE CONTRACTOR UNTIL ALL EXPOSED SLOPES HAVE AT LEAST 85%-90% VIGOROUS PERENNIAL VEGETATIVE COVER TO PREVENT EROSION. TEMPORARY EROSION CONTROL MEASURES SHALL BE REMOVED WITHIN 30 DAYS AFTER PERMANENT STABILIZATION IS ATTAINED.

PRIOR TO ANY CLEARING OR GRUBBING, A CONSTRUCTION ENTRANCE/EXIT SHALL BE CONSTRUCTED AT THE INTERSECTION OF THE PROPOSED ENTRANCES AND EXISTING ROADWAY TO AVOID TRACKING OF MUD, DUST AND DEBRIS FROM THE SITE.

PRIOR TO CONSTRUCTION, THE CONTRACTOR SHALL PREPARE A DETAILED SCHEDULE AND MARKED UP PLAN INDICATING AREAS AND COMPONENTS OF THE WORK AND KEY DATES SHOWING DATE OF DISTURBANCE AND COMPLETION OF THE WORK. THE CONTRACTOR SHALL SCHEDULE A PRE-CONSTRUCTION MEETING WITH THE MUNICIPAL STAFF. THREE COPIES OF THE SCHEDULE AND MARKED UP PLAN SHALL BE PROVIDED TO THE MUNICIPALITY THREE DAYS PRIOR TO THE SCHEDULED PRE-CONSTRUCTION MEETING. SPECIAL ATTENTION SHALL BE GIVEN TO THE 14 DAY LIMIT OF DISTURBANCE IN THE SCHEDULE ADDRESSING TEMPORARY AND PERMANENT VEGETATION MEASURES.

CONSTRUCTION AND POST-CONSTRUCTION PHASE

AREAS UNDERGOING ACTUAL CONSTRUCTION SHALL ONLY EXPOSE THAT AMOUNT OF MINERAL SOIL NECESSARY FOR PROGRESSIVE AND EFFICIENT CONSTRUCTION . AN AREA CONSIDERED OPEN IS ANY AREA NOT STABILIZED WITH PAVEMENT, VEGETATION, MULCHING, EROSION CONTROL MATS, RIPRAP OR GRAVEL BASE ON A ROAD . OPEN AREAS SHALL BE ANCHORED WITH TEMPORARY EROSION CONTROL AS SHOWN ON THE DESIGN PLANS AND AS DESCRIBED WITHIN THIS EROSION CONTROL PLAN WITHIN 14-DAYS OF DISTURBANCE. AREAS LOCATED WITHIN 100' OF STREAMS SHALL BE ANCHORED WITH TEMPORARY EROSION CONTROL WITHIN SEVEN (7) DAYS. REFER TO WINTER EROSION CONTROL NOTES FOR THE TREATMENT OF OPEN AREAS AFTER OCTOBER 1ST OF THE CONSTRUCTION YEAR.

THE CONTRACTOR MUST INSTALL ANY ADDED MEASURES WHICH MAY BE NECESSARY TO CONTROL EROSION/SEDIMENTATION FROM THE SITE DEPENDENT UPON THE ACTUAL SITE AND WEATHER CONDITIONS. CONTINUATION OF EARTHWORK OPERATIONS ON ADDITIONAL AREAS SHALL NOT BEGIN UNTIL THE EXPOSED SOIL SURFACE ON THE AREA BEING WORKED HAS BEEN STABILIZED, IN ORDER TO MINIMIZE AREAS WITHOUT EROSION CONTROL PROTECTION.

EROSION CONTROL APPLICATIONS & MEASURES

THE PLACEMENT OF EROSION CONTROL MEASURES SHALL BE COMPLETED IN ACCORDANCE WITH GUIDELINES ESTABLISHED IN BEST MANAGEMENT PRACTICES AND IN ACCORDANCE WITH THE EROSION CONTROL PLAN AND DETAILS IN THE PLAN SET.

1. TEMPORARY MULCHING:

ALL DISTURBED AREAS SHALL BE MULCHED WITH MATERIALS SPECIFIED BELOW PRIOR TO ANY STORM EVENT. ALL DISTURBED AREAS NOT FINAL GRADED WITHIN 14 DAYS SHALL BE MULCHED. ALSO, AREAS, WHICH HAVE BEEN TEMPORARILY OR PERMANENTLY SEEDED, SHALL BE MULCHED IMMEDIATELY FOLLOWING SEEDING. EROSION CONTROL BLANKETS ARE RECOMMENDED TO BE USED AT THE BASE OF GRASSED WATERWAYS AND ON SLOPES GREATER THAN 15%. MULCH ANCHORING SHOULD BE USED ON SLOPES GREATER THAN 5% AFTER SEPTEMBER 15TH OF THE CONSTRUCTION YEAR (SEE WINTER EROSION CONTROL NOTES).
TYPES OF MULCH:
HAY OR STRAW: SHALL BE APPLIED AT A RATE OF 75 LBS/1,000 S.F. (1.5 TONS PER ACRE).
EROSION CONTROL MIX: SHALL BE PLACED EVENLY AND MUST PROVIDE 100% SOIL COVERAGE. EROSION CONTROL MIX SHALL BE APPLIED SUCH THAT THE THICKNESS ON SLOPES 3:1 OR LESS IS 2 INCHES PLUS 1/2 INCH PER 20 FEET OF SLOPE UP TO 100 FEET. THE THICKNESS ON SLOPES BETWEEN 3:1 AND 2:1 SHALL BE 4 INCHES PLUS 1/2 INCH PER 20 FEET OF SLOPE UP TO 100 FEET. THIS SHALL NOT BE USED ON SLOPES GREATER THAN 2:1.
EROSION CONTROL BLANKET: SHALL BE INSTALLED SUCH THAT CONTINUOUS CONTACT BETWEEN THE MAT AND THE SOIL IS OBTAINED. INSTALL BLANKETS AND STAPLE IN ACCORDANCE WITH THE MANUFACTURER'S RECOMMENDATIONS.

2. SOIL STOCKPILES:

STOCKPILES OF SOIL OR SUBSOIL SHALL BE MULCHED WITH HAY OR STRAW AT A RATE OF 75 LBS/1,000 S.F. (1.5 TONS PER ACRE) OR WITH A FOUR-INCH LAYER OF WOOD WASTE EROSION CONTROL MIX. THIS WILL BE DONE WITHIN 24 HOURS OF STOCKING AND RE-ESTABLISHED PRIOR TO ANY RAINFALL. ANY SOIL STOCKPILE WILL NOT BE PLACED (EVEN COVERED WITH HAY OR STRAW) WITHIN 100 FEET FROM ANY NATURAL RESOURCES.

3. NATURAL RESOURCES PROTECTION:

ANY AREAS WITHIN 100 FEET FROM ANY NATURAL RESOURCES, IF NOT STABILIZED WITH A MINIMUM OF 75% MATURE VEGETATION CATCH, SHALL BE MULCHED USING TEMPORARY MULCHING (AS DESCRIBED IN PART 1. OF THIS SECTION) WITHIN 7 DAYS OF EXPOSURE OR PRIOR TO ANY STORM EVENT. SEDIMENT BARRIERS (AS DESCRIBED IN PART 4. OF THIS SECTION) SHALL BE PLACED BETWEEN ANY NATURAL RESOURCE AND THE DISTURBED AREA.
PROJECTS CROSSING THE NATURAL RESOURCE SHALL BE PROTECTED A MINIMUM DISTANCE OF 100 FEET ON EITHER SIDE FROM THE RESOURCE.

4. SEDIMENT BARRIERS:

PRIOR TO THE BEGINNING OF ANY CONSTRUCTION, SEDIMENT BARRIERS SHALL BE STAKED ACROSS THE SLOPE(S), ON THE CONTOUR AT OR JUST BELOW THE LIMITS OF CLEARING OR GRUBBING, AND/OR JUST ABOVE ANY ADJACENT PROPERTY LINE OR WATERCOURSE TO PROTECT AGAINST CONSTRUCTION RELATED EROSION. SEDIMENT BARRIERS SHALL BE MAINTAINED BY THE CONTRACTOR UNTIL ALL EXPOSED SLOPES HAVE AT LEAST 85%-90% VIGOROUS PERENNIAL VEGETATIVE COVER TO PREVENT EROSION.

SILT FENCE: SHALL BE INSTALLED PER THE DETAIL ON THE PLANS. THE EFFECTIVE HEIGHT OF THE FENCE SHALL NOT EXCEED 36 INCHES. IT IS RECOMMENDED THAT SILT FENCE BE REMOVED BY CUTTING THE FENCE MATERIALS AT GROUND LEVEL SO AS TO AVOID ADDITIONAL SOIL DISTURBANCE.

HAY BALES: SHALL BE INSTALLED PER THE DETAIL ON THE PLANS. BALES SHALL BE WIRE-BOUND OR STRING-TIED AND THESE BINDINGS MUST REMAIN PARALLEL WITH THE GROUND SURFACE DURING INSTALLATION TO PREVENT DETERIORATION OF THE BINDINGS. BALES SHALL BE INSTALLED WITHIN A MINIMUM 4 INCH DEEP TRENCH LINE WITH ENDS OF ADJACENT BALES TIGHTLY ABUTTING ONE ANOTHER.

EROSION CONTROL MIX: SHALL BE INSTALLED PER THE DETAIL ON THE PLANS. THE MIX SHALL CONSIST PRIMARILY OF ORGANIC MATERIAL AND CONTAIN A WELL-GRADED MIXTURE OF PARTICLE SIZES AND MAY CONTAIN ROCKS LESS THAN 4 INCHES IN DIAMETER. THE MIX COMPOSITION SHALL MEET THE STANDARDS DESCRIBED WITHIN THE MDEP BEST MANAGEMENT PRACTICES. NO TRENCHING IS REQUIRED FOR INSTALLATION OF THIS BARRIER.

CONTINUOUS CONTAINED BERM: SHALL BE INSTALLED PER THE DETAIL ON THE PLANS. THIS SEDIMENT BARRIER IS EROSION CONTROL MIX PLACED WITHIN A SYNTHETIC TUBULAR NETTING AND PERFORMS AS A STURDY SEDIMENT BARRIER THAT WORKS WELL ON HARD GROUND SUCH AS FROZEN CONDITIONS, TRAVELED AREAS OR PAVEMENT. NO TRENCHING IS REQUIRED FOR INSTALLATION OF THIS BARRIER.

5. TEMPORARY CHECK DAMS:

SHALL BE INSTALLED PER THE DETAIL ON THE PLANS. CHECK DAMS ARE TO BE PLACED WITHIN DITCHES/ SWALES AS SPECIFIED ON THE DESIGN PLANS IMMEDIATELY AFTER FINAL GRADING. CHECK DAMS SHALL BE 2 FEET HIGH. TEMPORARY CHECK DAMS MAY BE REMOVED ONLY AFTER THE ROADWAYS ARE PAVED AND THE VEGETATED SWALE ARE ESTABLISHED WITH AT LEAST 85%-90% OF VIGOROUS PERENNIAL GROWTH. THE AREA BENEATH THE CHECK DAM MUST BE SEEDED AND MULCHED IMMEDIATELY AFTER REMOVAL OF THE CHECK DAM.

STONE CHECK DAMS: SHOULD BE CONSTRUCTED OF 2 TO 3 INCH STONE AND PLACED SUCH THAT COMPLETE COVERAGE OF THE SWALE IS OBTAINED AND THAT THE CENTER OF THE DAM IS 6 INCHES LOWER THAT THE OUTER EDGES.

HAY BALE CHECK DAMS: WE DO NOT RECOMMEND THE USE OF HAY BALES AS CHECK DAMS.

MANUFACTURED CHECK DAMS: MANUFACTURED CHECK DAMS, AS SPECIFIED IN THE DETAIL ON THE PLANS, MAY BE USED IF AUTHORIZED BY THE PROPER LOCAL, STATE OR FEDERAL REGULATING AGENCIES. THESE UNITS SHALL BE INSTALLED IN ACCORDANCE WITH THE MANUFACTURE'S RECOMMENDATIONS.

6. STORMDRAIN INLET PROTECTION:

INLET PROTECTION SHALL BE PLACED AROUND A STORMDRAIN DROP INLETOR CURB INLET PRIOR TO PERMANENT STABILIZATION OF THE IMMEDIATE AND UPSTREAM DISTURBED AREAS. THEY SHALL BE CONSTRUCTED IN A MANNER THAT WILL FACILITATE CLEAN-OUT AND DISPOSAL OF TRAPPED SEDIMENTS AND MINIMIZE INTERFERENCE WITH CONSTRUCTION ACTIVITIES. ANY RESULTANT PONDING OF WATER FROM THE PROTECTION METHOD MUST NOT CAUSE EXCESSIVE INCONVENIENCE OR DAMAGE TO ADJACENT AREAS OR STRUCTURES.

HAY BALE DROP INLET PROTECTION: WE DO NOT RECOMMEND THE USE OF HAY BALES AS INLET PROTECTION.

CONCRETE BLOCK AND STONE INLET SEDIMENT FILTER (DROP OR CURB INLET): SHALL BE INSTALLED PER THE DETAIL ON THE PLANS. THE HEIGHT OF THE CONCRETE BLOCK BARRIER CAN VARY BUT MUST BE BETWEEN 12 AND 24 INCHES TALL. A MINIMUM OF 1 INCH CRUSHED STONE SHALL BE USED.

MANUFACTURED SEDIMENT BARRIERS AND FILTER (DROP OR CURB INLET): MANUFACTURED FILTERS, AS SPECIFIED IN THE DETAIL ON THE PLANS, MAY BE USED IF INSTALLED IN ACCORDANCE WITH THE MANUFACTURER'S RECOMMENDATIONS.

7. STABILIZED CONSTRUCTION ENTRANCE/EXIT:

PRIOR TO CLEARING AND/OR GRUBBING THE SITE A STABILIZED CONSTRUCTION ENTRANCE/EXIT SHALL BE CONSTRUCTED WHEREVER TRAFFIC WILL EXIT THE CONSTRUCTION SITE ONTO A PAVED ROADWAY IN ORDER TO MINIMIZE THE TRACKING OF SEDIMENT AND DEBRIS FROM THE CONSTRUCTION SITE ONTO PUBLIC ROADWAYS. THE ENTRANCES AND ADJACENT ROADWAY AREAS SHALL BE PERIODICALLY SWEPT OR WASHED TO FURTHER MINIMIZE THE TRACKING OF MUD, DUST OR DEBRIS FROM THE CONSTRUCTION AREA. STABILIZED CONSTRUCTION EXITS SHALL BE CONSTRUCTED IN AREAS SPECIFIED ON THE PLANS AND AS DETAILED ON THE PLANS.

8. DUST CONTROL:

DUST CONTROL DURING CONSTRUCTION SHALL BE ACHIEVED BY THE USE OF A WATERING TRUCK TO PERIODICALLY SPRINKLE THE EXPOSED ROADWAY AREAS AS NECESSARY TO REDUCE DUST DURING THE DRY MONTHS. APPLYING OTHER DUST CONTROL PRODUCTS SUCH AS CALCIUM CHLORIDE OR OTHER MANUFACTURED PRODUCTS ARE ALLOWED IF AUTHORIZED BY THE PROPER LOCAL, STATE AND/OR FEDERAL REGULATING AGENCIES. HOWEVER, IT IS THE CONTRACTOR'S ULTIMATE RESPONSIBILITY TO MITIGATE DUST AND SOIL LOSS FROM THE SITE.

9. TEMPORARY VEGETATION:

TEMPORARY VEGETATION SHALL BE APPLIED TO DISTURBED AREAS THAT WILL NOT RECEIVE FINAL GRADING FOR PERIODS UP TO 12 MONTHS. THIS PROCEDURE SHOULD BE USED EXTENSIVELY IN AREAS ADJACENT TO NATURAL RESOURCES. SEEDBED PREPARATION AND APPLICATION OF SEED SHALL BE CONDUCTED AS INDICATED IN THE PERMANENT VEGETATION SECTION OF THIS NARRATIVE. SPECIFIC SEEDS (FAST GROWING AND SHORT LIVING) SHALL BE SELECTED FROM THE MAINE EROSION AND SEDIMENT CONTROL BMP MANUAL DATED 3/2003 OR LATER. ALTERNATIVE EROSION CONTROL MEASURES SHOULD BE USED IF SEEDING CAN NOT BE DONE BEFORE SEPTEMBER 15TH OF THE CONSTRUCTION YEAR.

10. PERMANENT VEGETATION:

REVEGETATION MEASURES SHALL COMMENCE IMMEDIATELY UPON COMPLETION OF FINAL GRADING OF AREAS TO BE LOAMED AND SEEDED. THE APPLICATION OF SEED SHALL BE CONDUCTED BETWEEN APRIL 1ST AND OCTOBER 1ST OF THE CONSTRUCTION YEAR, PLEASE REFER TO THE WINTER EROSION CONTROL NOTES FOR MORE DETAIL. REVEGETATION MEASURES SHALL CONSIST OF THE FOLLOWING:

SEEDBED PREPARATION:

A. FOUR (4) INCHES OF LOAM SHALL BE SPREAD OVER DISTURBED AREAS AND SMOOTHED TO A UNIFORM SURFACE. LOAM SHALL BE FREE OF SUBSOIL, CLAY LUMPS, STONES AND OTHER OBJECTS OVER 2 INCHES OR LARGER IN ANY DIMENSION, AND WITHOUT WEEDS, ROOTS OR OTHER OBJECTIONABLE MATERIAL.

B. SOILS TESTS SHALL BE TAKEN AT THE TIME OF SOIL STRIPPING TO DETERMINE FERTILIZATION REQUIREMENTS. SOILS TESTS SHALL BE TAKEN PROMPTLY AS TO NOT INTERFERE WITH THE 14-DAY LIMIT ON SOIL EXPOSURE. BASED UPON TEST RESULTS, SOIL AMENDMENTS SHALL BE INCORPORATED INTO THE SOIL PRIOR TO FINAL SEEDING. IN LIEU OF SOIL TESTS, SOIL AMENDMENTS MAY BE APPLIED AS FOLLOWS:

ITEM	APPLICATION RATE
10-20-20 FERTILIZER (N-P205-K20 OR EQUAL)	18.4 LBS./1,000 S.F.
GROUND LIMESTONE (50% CALCIUM & MAGNESIUM OXIDE)	138 LBS./1,000 S.F.

C. WORK LIME AND FERTILIZER INTO THE SOIL AS NEARLY AS PRACTICAL TO A DEPTH OF 4 INCHES WITH PROPER EQUIPMENT. ROLL THE AREA TO FIRM THE SEEDBED EXCEPT ON CLAY OR SILTY SOILS OR COARSE SAND.

APPLICATION OF SEED:

A. SEEDING: SHALL BE CONDUCTED BETWEEN APRIL 1ST AND OCTOBER 1ST OF THE CONSTRUCTION YEAR. GENERALLY A SEED MIXTURE MAY BE APPLIED AS FOLLOWS:

MDOT SEEDING METHOD NO.1- PARK MIXTURE
MDOT SEEDING METHOD NO.3- ROADSIDE MIXTURE NO.3

NOTE: A SPECIFIC SEED MIXTURE SHOULD BE CHOSEN TO MATCH THE SOILS CONDITION OF THE SITE. VARIOUS AGENCIES CAN RECOMMEND SEED MIXTURES. MDEP RECOMMENDED SEED MIXTURES ARE IN THE EROSION AND SEDIMENT CONTROL BMP MANUAL DATED 3/2003 OR LATER.

B. HYDROSEEDING: SHALL BE CONDUCTED ON PREPARED AREAS WITH SLOPES LESS THAN 2:1. LIME AND FERTILIZER MAY BE APPLIED SIMULTANEOUSLY WITH THE SEED. RECOMMENDED SEEDING RATES MUST BE INCREASED BY 10% WHEN HYDROSEEDING.

C. MULCHING: SHALL COMMENCE IMMEDIATELY AFTER SEED IS APPLIED. REFER TO THE TEMPORARY MULCHING SECTION OF THIS NARRATIVE FOR DETAILS.

SODDING:

FOLLOWING SEEDBED PREPARATION, SOD CAN BE APPLIED IN LIEU OF SEEDING IN AREAS WHERE IMMEDIATE VEGETATION IS MOST BENEFICIAL SUCH AS DITCHES, AROUND STORMWATER DROP INLETS AND AREAS OF AESTHETIC VALUE. SOD SHOULD BE LAID AT RIGHT ANGLES TO THE DIRECTION OF FLOW, STARTING AT THE LOWEST ELEVATION. SOD SHOULD BE ROLLED OR TAMPED DOWN TO EVEN OUT THE JOINTS ONCE LAID DOWN. WHERE FLOW IS PREVALENT THE SOD MUST BE PROPERLY ANCHORED DOWN. IRRIGATE THE SOD IMMEDIATELY AFTER INSTALLATION. IN MOST CASES, SOD CAN BE ESTABLISHED BETWEEN APRIL 1ST AND NOVEMBER 15TH OF THE CONSTRUCTION YEAR, HOWEVER, REFER TO THE WINTER EROSION CONTROL NOTES FOR ANY ACTIVITIES AFTER OCTOBER 1ST.

TRENCH DEWATERING AND TEMPORARY STREAM DIVERSION:

WATER FROM CONSTRUCTION TRENCH DEWATERING OR TEMPORARY STREAM DIVERSION WILL PASS FIRST THROUGH A FILTER BAG OR SECONDARY CONTAINMENT STRUCTURE (E.G. HAY BALE LINED POOL) PRIOR TO DISCHARGE. THE DISCHARGE SITE SHALL BE SELECTED TO AVOID FLOODING AND SEDIMENT DISCHARGES TO A PROTECTED RESOURCE. IN NO CASE SHALL THE FILTER BAG OR CONTAINMENT STRUCTURE BE LOCATED WITHIN 100 FEET OF A PROTECTED NATURAL RESOURCE.

STANDARDS FOR TIMELY STABILIZATION:

STANDARD FOR THE TIMELY STABILIZATION OF DISTURBED SLOPES -- THE CONTRACTOR WILL CONSTRUCT AND STABILIZE STONE-COVERED SLOPES BY NOVEMBER 15. THE CONTRACTOR WILL SEED AND MULCH ALL SLOPES TO BE VEGETATED BY SEPTEMBER 15. THE MDEP WILL CONSIDER ANY AREA HAVING A GRADE GREATER THAN 15% (10H:1V) TO BE A SLOPE. IF THE CONTRACTOR FAILS TO STABILIZE ANY SLOPE TO BE VEGETATED BY SEPTEMBER 15, THEN THE CONTRACTOR WILL TAKE ONE OF THE FOLLOWING ACTIONS TO STABILIZE THE SLOPE FOR LATE FALL AND WINTER.

A. STABILIZE THE SOIL WITH TEMPORARY VEGETATION AND EROSION CONTROL MATS -- BY OCTOBER 1 THE CONTRACTOR WILL SEED THE DISTURBED SLOPE WITH WINTER RYE AT A SEEDING RATE OF 3 POUNDS PER 1,000 SQUARE FEET AND APPLY EROSION CONTROL MATS OVER THE MULCHED SLOPE. THE CONTRACTOR WILL MONITOR GROWTH OF THE RYE OVER THE NEXT 30 DAYS. IF THE RYE FAILS TO GROW AT LEAST THREE INCHES OR COVER AT LEAST 75% OF THE DISTURBED SLOPE BY NOVEMBER 1, THEN THE APPLICANT WILL COVER THE SLOPE WITH A LAYER OF WOOD WASTE COMPOST AS DESCRIBED IN ITEM 2(C.) OF THIS STANDARD OR WITH STONE RIPRAP AS DESCRIBED IN ITEM 2(D.) OF THIS STANDARD.
B. STABILIZE THE SLOPE WITH SOD -- THE CONTRACTOR WILL STABILIZE THE DISTURBED SLOPE WITH PROPERLY INSTALLED SOD BY OCTOBER 1. PROPER INSTALLATION INCLUDES THE APPLICANT PINNING THE SOD ONTO THE SLOPE WITH WIRE PINS, ROLLING THE SOD TO GUARANTEE CONTACT BETWEEN THE SOD AND UNDERLYING SOIL, AND WATERING THE SOD TO PROMOTE ROOT GROWTH INTO THE DISTURBED SOIL. THE APPLICANT WILL NOT USE LATE-SEASON SOD INSTALLATION TO STABILIZE SLOPES HAVING A GRADE GREATER THAN 33% (3H:1V).
C. STABILIZE THE SLOPE WITH WOOD WASTE COMPOST -- THE CONTRACTOR WILL PLACE A SIX-INCH LAYER OF WOOD WASTE COMPOST ON THE SLOPE BY NOVEMBER 15. PRIOR TO PLACING THE WOOD WASTE COMPOST, THE APPLICANT WILL REMOVE ANY SNOW ACCUMULATION ON THE DISTURBED SLOPE. THE APPLICANT WILL NOT USE WOOD WASTE COMPOST TO STABILIZE SLOPES HAVING GRADES GREATER THAN 50% (2H:1V) OR HAVING GROUNDWATER SEEPS ON THE SLOPE FACE.
D. STABILIZE THE SLOPE WITH STONE RIPRAP -- THE CONTRACTOR WILL PLACE A LAYER OF STONE RIPRAP ON THE SLOPE BY NOVEMBER 15. THE APPLICANT WILL HIRE A REGISTERED PROFESSIONAL ENGINEER TO DETERMINE THE STONE SIZE NEEDED FOR STABILITY AND TO DESIGN A FILTER LAYER FOR UNDERNEATH THE RIPRAP.

STANDARD FOR THE TIMELY STABILIZATION OF DISTURBED SOILS -- BY SEPTEMBER 15 THE CONTRACTOR WILL SEED AND MULCH ALL DISTURBED SOILS ON AREAS HAVING A SLOPE LESS THAN 15%. IF THE CONTRACTOR FAILS TO STABILIZE THESE SOILS BY THIS DATE, THEN THE CONTRACTOR WILL TAKE ONE OF THE FOLLOWING ACTIONS TO STABILIZE THE SOIL FOR LATE FALL AND WINTER.

A. STABILIZE THE SOIL WITH TEMPORARY VEGETATION -- BY OCTOBER 1 THE CONTRACTOR WILL SEED THE DISTURBED SOIL WITH WINTER RYE AT A SEEDING RATE OF 3 POUNDS PER 1000 SQUARE FEET, LIGHTLY MULCH THE SEEDED SOIL WITH HAY OR STRAW AT 75 POUNDS PER 1000 SQUARE FEET, AND ANCHOR THE MULCH WITH PLASTIC NETTING. THE APPLICANT WILL MONITOR GROWTH OF THE RYE OVER THE NEXT 30 DAYS. IF THE RYE FAILS TO GROW AT LEAST THREE INCHES OR COVER AT LEAST 75% OF THE DISTURBED SOIL BEFORE NOVEMBER 15, THEN THE APPLICANT WILL MULCH THE AREA FOR OVER-WINTER PROTECTION AS DESCRIBED IN ITEM 3(C.) OF THIS STANDARD.
B. STABILIZE THE SOIL WITH SOD -- THE APPLICANT WILL STABILIZE THE DISTURBED SOIL WITH PROPERLY INSTALLED SOD BY OCTOBER 1. PROPER INSTALLATION INCLUDES THE APPLICANT PINNING THE SOD ONTO THE SOIL WITH WIRE PINS, ROLLING THE SOD TO GUARANTEE CONTACT BETWEEN THE SOD AND UNDERLYING SOIL, AND WATERING THE SOD TO PROMOTE ROOT GROWTH INTO THE DISTURBED SOIL.
C. STABILIZE THE SOIL WITH MULCH -- BY NOVEMBER 15 THE APPLICANT WILL MULCH THE DISTURBED SOIL BY SPREADING HAY OR STRAW AT A RATE OF AT LEAST 150 POUNDS PER 1000 SQUARE FEET ON THE AREA SO THAT NO SOIL IS VISIBLE THROUGH THE MULCH. PRIOR TO APPLYING THE MULCH, THE APPLICANT WILL REMOVE ANY SNOW ACCUMULATION ON THE DISTURBED AREA. IMMEDIATELY AFTER APPLYING THE MULCH, THE APPLICANT WILL ANCHOR THE MULCH WITH PLASTIC NETTING TO PREVENT WIND FROM MOVING THE MULCH OFF THE DISTURBED SOIL.

CONSTRUCTION SCHEDULE

SITE IMPROVEMENTS WILL MOST LIKELY BEGIN IN FALL 2018 DEPENDING UPON FINAL PROJECT APPROVAL. THE FOLLOWING SCHEDULE IS ANTICIPATED FOR THE CONSTRUCTION OF THE SITE IMPROVEMENTS.

SCHEDULE

1. ESTIMATED CONSTRUCTION TIME:	8 MONTHS
2. EROSION CONTROL MEASURES PLACED.	MONTH 1
3. SITE CLEARING AND GRUBBING.	MONTH 1
4. PLACEMENT & GRADING OF FILL	MONTH 1-3
5. BUILDING CONSTRUCTION	MONTH 1-3
6. STORMWATER MANAGEMENT AREA CONSTRUCTION.	MONTH 1-3
7. UTILITY IMPROVEMENTS	MONTH 2-5
8. PARKING BASE AND BINDER PAVEMENT	MONTH 2-5
9. STABILIZE FOR WINTER	OCTOBER 15
10. LANDSCAPING AND SEEDING	SPRING 2019
11. CONSTRUCTION OF FINISH PAVEMENT	SPRING 2019
12. FINAL SEEDING ON PREPARED AREAS. (DURING GROWING SEASON.)	MONTH 6 - MONTH 7
13. BIWEEKLY MONITORING OF VEGETATIVE GROWTH.	MONTH 7 - MONTH 8
** 14. RE-SEEDING OF AREAS, IF NEEDED.	MONTH 8
** 15. REMOVAL OF EROSION CONTROL DEVICES.	UPON FINAL PROJECT COMPLETION AND STABILIZATION

** DATES ARE SUBJECT TO CHANGE, DEPENDING ON CONSTRUCTION PROGRESS.

INSPECTIONS/MONITORING:

1. MAINTENANCE MEASURES SHALL BE APPLIED AS NEEDED DURING THE ENTIRE CONSTRUCTION CYCLE. AFTER EACH RAINFALL, SNOW STORM OR PERIOD OF THAWING AND RUNOFF, OR AT LEAST EVERY SEVEN (7) DAYS, THE CONTRACTOR SHALL PERFORM A VISUAL INSPECTION OF ALL INSTALLED EROSION CONTROL MEASURES. THE CONTRACTOR SHALL PERFORM REPAIRS AS NEEDED TO ALLOW CONTINUED PROPER FUNCTIONING OF THE EROSION CONTROL MEASURE. THE CONTRACTOR SHALL PROVIDE THE NECESSARY REGULATING AGENCIES WITH WRITTEN DOCUMENTATION DESCRIBING DATES OF INSPECTIONS AND NECESSARY FOLLOW-UP WORK TO MAINTAIN EROSION CONTROL MEASURES MEETING THE REQUIREMENTS OF THIS PLAN.

2. FOLLOWING THE TEMPORARY AND/OR FINAL SEEDINGS, THE CONTRACTOR SHALL INSPECT THE WORK AREA SEMIMONTHLY UNTIL THE SEEDINGS HAVE BEEN ESTABLISHED. ESTABLISHED MEANS A MINIMUM OF 85%-90% OF AREAS VEGETATED WITH VIGOROUS GROWTH. RESEEDING SHALL BE CARRIED OUT BY THE CONTRACTOR WITH FOLLOW-UP INSPECTIONS IN THE EVENT OF ANY FAILURES UNTIL VEGETATION IS ADEQUATELY ESTABLISHED.

HOUSEKEEPING:

A. SPILL PREVENTION: CONTROLS MUST BE USED TO PREVENT POLLUTANTS FROM BEING DISCHARGED FROM MATERIALS ON-SITE, INCLUDING STORAGE PRACTICES TO MINIMIZE EXPOSURE OF THE MATERIALS TO STORMWATER, AND APPROPRIATE SPILL PREVENTION, CONTAINMENT, AND RESPONSE PLANNING AND IMPLEMENTATION.

B. GROUNDWATER PROTECTION: DURING CONSTRUCTION, LIQUID PETROLEUM PRODUCTS AND OTHER HAZARDOUS MATERIALS WITH THE POTENTIAL TO CONTAMINATE GROUNDWATER MAY NOT BE STORED OR HANDLED IN AREAS OF THE SITE DRAINING TO AN INFILTRATION AREA. AN "INFILTRATION AREA" IS ANY AREA OF THE SITE THAT BY DESIGN OR AS A RESULT OF SOILS, TOPOGRAPHY AND OTHER RELEVANT FACTORS, ACCUMULATES RUNOFF THAT INFILTRATES INTO THE SOIL. DIKES, BERMS, SUMPS, AND OTHER FORMS OF SECONDARY CONTAINMENT THAT PREVENT DISCHARGE TO GROUNDWATER MAY BE USED TO ISOLATE PORTIONS OF THE SITE FOR THE PURPOSES OF STORAGE AND HANDLING OF THESE MATERIALS.

HOUSEKEEPING: (CONT.)

C. FUGITIVE SEDIMENT AND DUST: ACTIONS MUST BE TAKEN TO INSURE THAT ACTIVITIES DO NOT RESULT IN NOTICEABLE EROSION OF SOILS OR FUGITIVE DUST EMISSIONS DURING OR AFTER CONSTRUCTION. OIL MAY NOT BE USED FOR DUST CONTROL.

D. DEBRIS AND OTHER MATERIALS: LITTER, CONSTRUCTION DEBRIS, AND CHEMICALS EXPOSED TO STORMWATER MUST BE PREVENTED FROM BECOMING A POLLUTANT SOURCE.

E. TRENCH DEWATERING: TRENCH DEWATERING IS THE REMOVAL OF WATER FROM TRENCHES, FOUNDATIONS, COFFERDAMS, PONDS, AND OTHER AREAS WITHIN THE CONSTRUCTION AREA THAT RETAIN WATER AFTER EXCAVATION. IN MOST CASES, THE COLLECTED WATER IS HEAVILY SILTED AND HINDERS CORRECT AND SAFE CONSTRUCTION PRACTICES. THE COLLECTED WATER MUST BE REMOVED FROM THE PONDED AREA, EITHER THROUGH GRAVITY OR PUMPING, AND MUST BE SPREAD THROUGH NATURAL WOODED BUFFERS OR REMOVED TO AREAS THAT ARE SPECIFICALLY DESIGNED TO COLLECT THE MAXIMUM AMOUNT OF SEDIMENT POSSIBLE, LIKE A COFFERDAM SEDIMENTATION BASIN. AVOID ALLOWING THE WATER TO FLOW OVER DISTURBED AREAS OF THE SITE. EQUIVALENT MEASURES MAY BE TAKEN IF APPROVED.

F. STORMWATER MANAGEMENT: THE CONTRACTOR IS RESPONSIBLE FOR MAINTENANCE AND INSPECTION OF ALL STORMWATER MANAGEMENT INFRASTRUCTURE DURING CONSTRUCTION. REFER TO THE INSPECTION, MAINTENANCE AND HOUSEKEEPING PLAN IN THE STORMWATER MANAGEMENT REPORT FOR SPECIFIC INSTRUCTIONS.

WINTER EROSION CONTROL MEASURES:

THE WINTER CONSTRUCTION PERIOD IS FROM OCTOBER 1 THROUGH APRIL 15. IF THE CONSTRUCTION SITE IS NOT STABILIZED WITH PAVEMENT, A ROAD GRAVEL BASE, 75% MATURE VEGETATION COVER OR RIPRAP BY NOVEMBER 15 THEN THE SITE NEEDS TO BE PROTECTED WITH OVER-WINTER STABILIZATION. AN AREA CONSIDERED OPEN IS ANY AREA NOT STABILIZED WITH PAVEMENT, VEGETATION, MULCHING, EROSION CONTROL MATS, RIPRAP OR GRAVEL BASE ON A ROAD.
WINTER EXCAVATION AND EARTHWORK SHALL BE COMPLETED SUCH THAT NO MORE THAN 1 ACRE OF THE SITE IS WITHOUT STABILIZATION AT ANY ONE TIME. LIMIT THE EXPOSED AREA TO THOSE AREAS IN WHICH WORK IS EXPECTED TO BE UNDER TAKEN DURING THE PROCEEDING 15 DAYS AND THAT CAN BE MULCHED IN ONE DAY PRIOR TO ANY SNOW EVENT. ALL AREAS SHALL BE CONSIDERED TO BE DENUDED UNTIL THE SUBBASE GRAVEL IS INSTALLED IN ROADWAY AREAS OR THE AREAS OF FUTURE LOAM AND SEED HAVE BEEN LOAMED, SEEDED AND MULCHED. HAY AND STRAW MULCH RATE SHALL BE A MINIMUM OF 150 LBS./1,000 S.F. (3 TONS/ACRE) AND SHALL BE PROPERLY ANCHORED.
THE CONTRACTOR MUST INSTALL ANY ADDED MEASURES WHICH MAY BE NECESSARY TO CONTROL EROSION/SEDIMENTATION FROM THE SITE DEPENDENT UPON THE ACTUAL SITE AND WEATHER CONDITIONS.
CONTINUATION OF EARTHWORK OPERATIONS ON ADDITIONAL AREAS SHALL NOT BEGIN UNTIL THE EXPOSED SOIL SURFACE ON THE AREA BEING WORKED HAS BEEN STABILIZED, IN ORDER TO MINIMIZE AREAS WITHOUT EROSION CONTROL PROTECTION.

1. SOIL STOCKPILES

STOCKPILES OF SOIL OR SUBSOIL WILL BE MULCHED FOR OVER WINTER PROTECTION WITH HAY OR STRAW AT TWICE THE NORMAL RATE OR AT 150 LBS/1,000 S.F. (3 TONS PER ACRE) OR WITH A FOUR-INCH LAYER OF WOOD WASTE EROSION CONTROL MIX. THIS WILL BE DONE WITHIN 24 HOURS OF STOCKING AND RE-ESTABLISHED PRIOR TO ANY RAINFALL OR SNOWFALL.
ANY SOIL STOCKPILE WILL NOT BE PLACED (EVEN COVERED WITH HAY OR STRAW) WITHIN 100 FEET FROM ANY NATURAL RESOURCES.

2. NATURAL RESOURCES PROTECTION

ANY AREAS WITHIN 100 FEET FROM ANY NATURAL RESOURCES, IF NOT STABILIZED WITH A MINIMUM OF 75% MATURE VEGETATION CATCH, SHALL BE MULCHED BY DECEMBER 1 AND ANCHORED WITH PLASTIC NETTING OR PROTECTED WITH EROSION CONTROL MATS.
DURING WINTER CONSTRUCTION, A DOUBLE LINE OF SEDIMENT BARRIERS (I.E. SILT FENCE BACKED WITH HAY BALES OR EROSION CONTROL MIX) WILL BE PLACED BETWEEN ANY NATURAL RESOURCE AND THE DISTURBED AREA.
PROJECTS CROSSING THE NATURAL RESOURCE SHALL BE PROTECTED A MINIMUM DISTANCE OF 100 FEET ON EITHER SIDE FROM THE RESOURCE. EXISTING PROJECTS NOT STABILIZED BY DECEMBER 1 SHALL BE PROTECTED WITH THE SECOND LINE OF SEDIMENT BARRIER TO ENSURE FUNCTIONALITY DURING THE SPRING THAW AND RAINS.

3. SEDIMENT BARRIERS

DURING FROZEN CONDITIONS, SEDIMENT BARRIERS SHALL CONSIST OF WOOD WASTE FILTER BERMS AS FROZEN SOIL PREVENTS THE PROPER INSTALLATION OF HAY BALES AND SEDIMENT SILT FENCES.

4. MULCHING

ALL AREA SHALL BE CONSIDERED TO BE DENUDED UNTIL AREAS OF FUTURE LOAM AND SEED HAVE BEEN LOAMED, SEEDED AND MULCHED. HAY AND STRAW MULCH SHALL BE APPLIED AT A RATE OF 150 LB. PER 1.000 SQUARE FEET OR 3 TONS/ACRE (TWICE THE NORMAL ACCEPTED RATE OF 75-LBS./1,000 S.F. OR 1.5 TONS/ACRE) AND SHALL BE PROPERLY ANCHORED.
MULCH SHALL NOT BE SPREAD ON TOP OF SNOW. THE SNOW WILL BE REMOVED DOWN TO A ONE-INCH DEPTH OR LESS PRIOR TO APPLICATION.
AFTER EACH DAY OF FINAL GRADING, THE AREA WILL BE PROPERLY STABILIZED WITH ANCHORED HAY OR STRAW OR EROSION CONTROL MATTING.
AN AREA SHALL BE CONSIDERED TO HAVE BEEN STABILIZED WHEN EXPOSED SURFACES HAVE BEEN EITHER MULCHED WITH STRAW OR HAY AT A RATE OF 150 LB. PER 1.000 SQUARE FEET (3TONS/ACRE) AND ADEQUATELY ANCHORED THAT GROUND SURFACE IS NOT VISIBLE THOUGH THE MULCH.

BETWEEN THE DATES OF SEPTEMBER 1 AND APRIL 15, ALL MULCH SHALL BE ANCHORED BY EITHER PEG LINE, MULCH NETTING, ASPHALT EMULSION CHEMICAL, TRACK OR WOOD CELLULOSE FIBER. WHEN GROUND SURFACE IS NOT VISIBLE THOUGH THE MULCH THEN COVER IS SUFFICIENT.
AFTER NOVEMBER 1ST, MULCH AND ANCHORING OF ALL BARE SOIL SHALL OCCUR AT THE END OF EACH FINAL GRADING WORK DAY.

5. MULCHING ON SLOPES AND DITCHES

SLOPES SHALL NOT BE LEFT EXPOSED FOR ANY EXTENDED TIME OF WORK SUSPENSION UNLESS FULLY MULCHED AND ANCHORED WITH PEG AND NETTING OR WITH EROSION CONTROL BLANKETS.
MULCHING SHALL BE APPLIED AT A RATE OF 230 LBS/1,000 S.F. ON ALL SLOPES GREATER THAN 8%.
MULCH NETTING SHALL BE USED TO ANCHOR MULCH IN ALL DRAINAGE WAYS WITH A SLOPE GREATER THAN 3% FOR SLOPES EXPOSED TO DIRECT WINDS AND FOR ALL OTHER SLOPES GREATER THAN 8%.
EROSION CONTROL BLANKETS SHALL BE USED IN LIEU OF MULCH IN ALL DRAINAGE WAYS WITH SLOPES 8%.
EROSION CONTROL MIX CAN BE USED TO SUBSTITUTE EROSION CONTROL BLANKETS ON ALL SLOPES EXCEPT DITCHES.

6. SEEDING

BETWEEN THE DATES OF OCTOBER 15 AND APRIL 1ST, LOAM OR SEED WILL NOT BE REQUIRED. DURING PERIODS OF ABOVE FREEZING TEMPERATURES FINISHED AREAS SHALL BE FINE GRADED AND EITHER PROTECTED WITH MULCH OR TEMPORARILY SEEDED AND MULCHED UNTIL SUCH TIME AS THE FINAL TREATMENT CAN BE APPLIED. IF THE DATE IS AFTER NOVEMBER 1ST AND IF THE EXPOSED AREA HAS BEEN LOOMED, FINAL GRADED WITH A UNIFORM SURFACE, THEN THE AREA MAY BE DORMANT SEEDED AT A RATE OF 3 TIMES HIGHER THAN SPECIFIED FOR PERMANENT SEED AND THEN MULCHED.
DORMANT SEEDING MAY BE SELECTED TO BE PLACED PRIOR TO THE PLACEMENT OF MULCH AND FABRIC NETTING ANCHORED WITH STAPLES.
IF DORMANT SEEDING IS USED FOR THE SITE, ALL DISTURBED AREAS SHALL RECEIVE 4' OF LOAM AND SEED AT AN APPLICATION RATE OF 5LBS/1000 S.F. ALL AREAS SEEDED DURING THE WINTER WILL BE INSPECTED IN THE SPRING FOR ADEQUATE CATCH. ALL AREAS SUFFICIENTLY VEGETATED (LESS THAN 75% CATCH) SHALL BE REVEGETATED BY REPLACING LOAM, SEED AND MULCH. IF DORMANT SEEDING IS NOT USED FOR THE SITE, ALL DISTURBED AREAS SHALL BE REVEGETATED IN THE SPRING.

7. TRENCH DEWATERING AND TEMPORARY STREAM DIVERSION

WATER FROM CONSTRUCTION TRENCH DEWATERING OR TEMPORARY STREAM DIVERSION WILL PASS FIRST THROUGH A FILTER BAG OR SECONDARY CONTAINMENT STRUCTURE (E.G. HAY BALE LINED POOL) PRIOR TO DISCHARGE. THE DISCHARGE SITE SHALL BE SELECTED TO AVOID FLOODING, ICING, AND SEDIMENT DISCHARGES TO A PROTECTED RESOURCE. IN NO CASE SHALL THE FILTER BAG OR CONTAINMENT STRUCTURE BE LOCATED WITHIN 100 FEET OF A PROTECTED NATURAL RESOURCE.

8. INSPECTION AND MONITORING

MAINTENANCE MEASURES SHALL BE APPLIED AS NEEDED DURING THE ENTIRE CONSTRUCTION SEASON. AFTER EACH RAINFALL, SNOW STORM OR PERIOD OF THAWING AND RUNOFF, THE SITE CONTRACTOR SHALL PERFORM A VISUAL INSPECTION OF ALL INSTALLED EROSION CONTROL MEASURES AND PERFORM REPAIRS AS NEEDED TO INSURE THEIR CONTINUOUS FUNCTION.
FOLLOWING THE TEMPORARY AND OR FINAL SEEDING AND MULCHING, THE CONTRACTOR SHALL IN THE SPRING INSPECT AND REPAIR ANY DAMAGES AND/ OR UNESTABLISHED SPOTS. ESTABLISHED VEGETATIVE COVER MEANS A MINIMUM OF 85 TO 90% OF AREAS VEGETATED WITH VIGOROUS GROWTH.

STANDARDS FOR TIMELY STABILIZATION OF CONSTRUCTION SITES DURING WINTER

1. STANDARD FOR THE TIMELY STABILIZATION OF DITCHES AND CHANNELS -- THE APPLICANT WILL CONSTRUCT AND STABILIZE ALL STONE-LINED DITCHES AND CHANNELS ON THE SITE BY NOVEMBER 15. THE APPLICANT WILL CONSTRUCT AND STABILIZE ALL GRASS-LINED DITCHES AND CHANNELS ON THE SITE BY SEPTEMBER 15. IF THE APPLICANT FAILS TO STABILIZE A DITCH OR CHANNEL TO BE GRASS-LINED BY SEPTEMBER 15, THEN THE APPLICANT WILL TAKE ONE OF THE FOLLOWING ACTIONS TO STABILIZE THE DITCH FOR LATE FALL AND WINTER.

INSTALL A SOD LINING IN THE DITCH -- THE APPLICANT WILL LINE THE DITCH WITH PROPERLY INSTALLED SOD BY OCTOBER 1. PROPER INSTALLATION INCLUDES THE APPLICANT PINNING THE SOD ONTO THE SOIL WITH WIRE PINS, ROLLING THE SOD TO GUARANTEE CONTACT BETWEEN THE SOD AND UNDERLYING SOIL, WATERING THE SOD TO PROMOTE ROOT GROWTH INTO THE DISTURBED SOIL, AND ANCHORING THE SOD WITH JUTE OR PLASTIC MESH TO PREVENT THE SOD STRIPS FROM SLOUGHING DURING FLOW CONDITIONS.
INSTALL A STONE LINING IN THE DITCH --THE APPLICANT WILL LINE THE DITCH WITH STONE RIPRAP BY NOVEMBER 15. THE APPLICANT WILL HIRE A REGISTERED PROFESSIONAL ENGINEER TO DETERMINE THE STONE SIZE AND LINING THICKNESS NEEDED TO WITHSTAND THE ANTICIPATED FLOW VELOCITIES AND FLOW DEPTHS WITHIN THE DITCH. IF NECESSARY, THE APPLICANT WILL REGRADE THE DITCH PRIOR TO PLACING THE STONE LINING SO TO PREVENT THE STONE LINING FROM REDUCING THE DITCH'S CROSS-SECTIONAL AREA.

2. STANDARD FOR THE TIMELY STABILIZATION OF DISTURBED SLOPES -- THE APPLICANT WILL CONSTRUCT AND STABILIZE STONE-COVERED SLOPES BY NOVEMBER 15. THE APPLICANT WILL SEED AND MULCH ALL SLOPES TO BE VEGETATED BY SEPTEMBER 15. THE DEPARTMENT WILL CONSIDER ANY AREA HAVING A GRADE GREATER THAN 15% (10H:1V) TO BE A SLOPE. IF THE APPLICANT FAILS TO STABILIZE ANY SLOPE TO BE VEGETATED BY SEPTEMBER 15, THEN THE APPLICANT WILL TAKE ONE OF THE FOLLOWING ACTIONS TO STABILIZE THE SLOPE FOR LATE FALL AND WINTER.
STABILIZE THE SOIL WITH TEMPORARY VEGETATION AND EROSION CONTROL MATS -- BY OCTOBER 1 THE APPLICANT WILL SEED THE DISTURBED SLOPE WITH WINTER RYE AT A SEEDING RATE OF 3 POUNDS PER 1000 SQUARE FEET AND APPLY EROSION CONTROL MATS OVER THE MULCHED SLOPE. THE APPLICANT WILL MONITOR GROWTH OF THE RYE OVER THE NEXT 30 DAYS. IF THE RYE FAILS TO GROW AT LEAST THREE INCHES OR COVER AT LEAST 75% OF THE DISTURBED SLOPE BY NOVEMBER 1, THEN THE APPLICANT WILL COVER THE SLOPE WITH A LAYER OF WOOD WASTE COMPOST AS DESCRIBED IN ITEM III OF THIS CONDITION OR WITH STONE RIPRAP AS DESCRIBED IN ITEM IV OF THIS CONDITION.
STABILIZE THE SLOPE WITH SOD -- THE APPLICANT WILL STABILIZE THE DISTURBED SLOPE WITH PROPERLY INSTALLED SOD BY OCTOBER 1. PROPER INSTALLATION INCLUDES THE APPLICANT PINNING THE SOD ONTO THE SLOPE WITH WIRE PINS, ROLLING THE SOD TO GUARANTEE CONTACT BETWEEN THE SOD AND UNDERLYING SOIL, AND WATERING THE SOD TO PROMOTE ROOT GROWTH INTO THE DISTURBED SOIL. THE APPLICANT WILL NOT USE LATE-SEASON SOD INSTALLATION TO STABILIZE SLOPES HAVING A GRADE GREATER THAN 33% (3H:1V).
STABILIZE THE SLOPE WITH WOOD WASTE COMPOST -- THE APPLICANT WILL PLACE A SIX-INCH LAYER OF WOOD WASTE COMPOST ON THE SLOPE BY NOVEMBER 15. PRIOR TO PLACING THE WOOD WASTE COMPOST, THE APPLICANT WILL REMOVE ANY SNOW ACCUMULATION ON THE DISTURBED SLOPE. THE APPLICANT WILL NOT USE WOOD WASTE COMPOST TO STABILIZE SLOPES HAVING GRADES GREATER THAN 50% (2H:1V) OR HAVING GROUNDWATER SEEPS ON THE SLOPE FACE.
STABILIZE THE SLOPE WITH STONE RIPRAP -- THE APPLICANT WILL PLACE A LAYER OF STONE RIPRAP ON THE SLOPE BY NOVEMBER 15. THE APPLICANT WILL HIRE A REGISTERED PROFESSIONAL ENGINEER TO DETERMINE THE STONE SIZE NEEDED FOR STABILITY AND TO DESIGN A FILTER LAYER FOR UNDERNEATH THE RIPRAP.

3. STANDARD FOR THE TIMELY STABILIZATION OF DISTURBED SOILS -- BY SEPTEMBER 15 THE APPLICANT WILL SEED AND MULCH ALL DISTURBED SOILS ON AREAS HAVING A SLOPE LESS THAN 15%. IF THE APPLICANT FAILS TO STABILIZE THESE SOILS BY THIS DATE, THEN THE APPLICANT WILL TAKE ONE OF THE FOLLOWING ACTIONS TO STABILIZE THE SOIL FOR LATE FALL AND WINTER.
STABILIZE THE SOIL WITH TEMPORARY VEGETATION -- BY OCTOBER 1 THE APPLICANT WILL SEED THE DISTURBED SOIL WITH WINTER RYE AT A SEEDING RATE OF 3 POUNDS PER 1000 SQUARE FEET, LIGHTLY MULCH THE SEEDED SOIL WITH HAY OR STRAW AT 75 POUNDS PER 1000 SQUARE FEET, AND ANCHOR THE MULCH WITH PLASTIC NETTING. THE APPLICANT WILL MONITOR GROWTH OF THE RYE OVER THE NEXT 30 DAYS. IF THE RYE FAILS GROW AT LEAST THREE INCHES OR COVER AT LEAST 75% OF THE DISTURBED SOIL BEFORE NOVEMBER 15, THEN THE APPLICANT WILL MULCH THE AREA FOR OVER-WINTER PROTECTION AS DESCRIBED IN ITEM III OF THIS STANDARD.
STABILIZE THE SOIL WITH SOD -- THE APPLICANT WILL STABILIZE THE DISTURBED SOIL WITH PROPERLY INSTALLED SOD BY OCTOBER 1. PROPER INSTALLATION INCLUDES THE APPLICANT PINNING THE SOD ONTO THE SOIL WITH WIRE PINS, ROLLING THE SOD TO GUARANTEE CONTACT BETWEEN THE SOD AND UNDERLYING SOIL, AND WATERING THE SOD TO PROMOTE ROOT GROWTH INTO THE DISTURBED SOIL.
STABILIZE THE SOIL WITH MULCH -- BY NOVEMBER 15 THE APPLICANT WILL MULCH THE DISTURBED SOIL BY SPREADING HAY OR STRAW AT A RATE OF AT LEAST 150 POUNDS PER 1000 SQUARE FEET ON THE AREA SO THAT NO SOIL IS VISIBLE THROUGH THE MULCH. PRIOR TO APPLYING THE MULCH, THE APPLICANT WILL REMOVE ANY SNOW ACCUMULATION ON THE DISTURBED AREA. IMMEDIATELY AFTER APPLYING THE MULCH, THE APPLICANT WILL ANCHOR THE MULCH WITH PLASTIC NETTING TO PREVENT WIND FROM MOVING THE MULCH OFF THE DISTURBED SOIL.

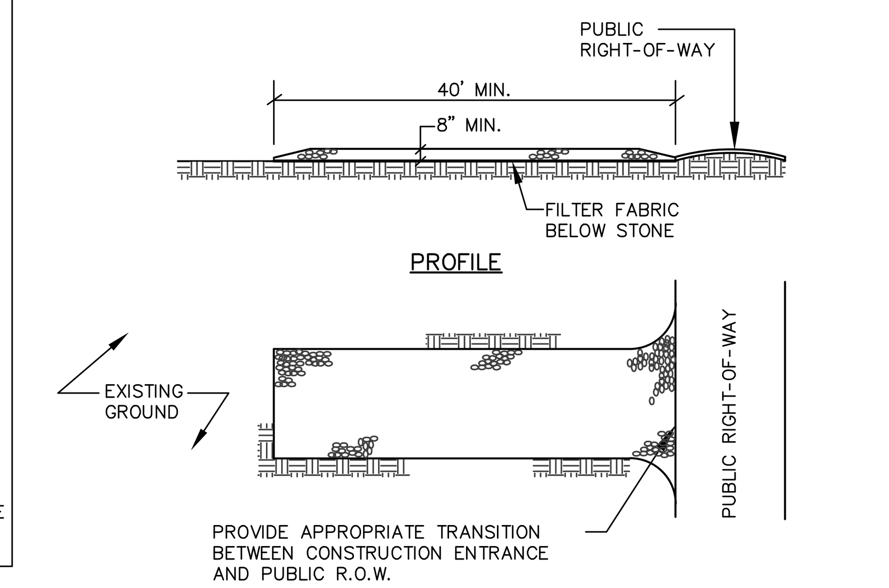

NOTES:

1. STONE SIZE- AASHTO DESIGNATION M43, SIZE NO. 2 (2 1/2" TO 1 1/2"). USE CRUSHED STONE.
2. LENGTH- AS SHOWN ON PLANS, MIN. 50 FEET.
3. THICKNESS- NOT LESS THAN EIGHT (8) INCHES.
4. WIDTH- NOT LESS THAN FULL WIDTH OF ALL POINT OF INGRESS OR EGRESS.
5. MAINTENANCE- THE ENTRANCE SHALL BE MAINTAINED IN A CONDITION WHICH WILL PREVENT TRACKING OR FLOWING OF SEDIMENT ONTO PUBLIC RIGHT-OF-WAY. THIS MAY REQUIRE PERIODIC TOP DRESSING WITH ADDITIONAL STONE AS CONDITIONS DEMAND AND REPAIR AND/OR CLEANOUT OF ANY MEASURES USED TO TRAP SEDIMENT. ALL SEDIMENT SPILLED, DROPPED, WASHED OR TRACKED ONTO PUBLIC RIGHT-OF-WAY MUST BE REMOVED IMMEDIATELY.

STABILIZED CONSTRUCTION ENTRANCE
NOT TO SCALE

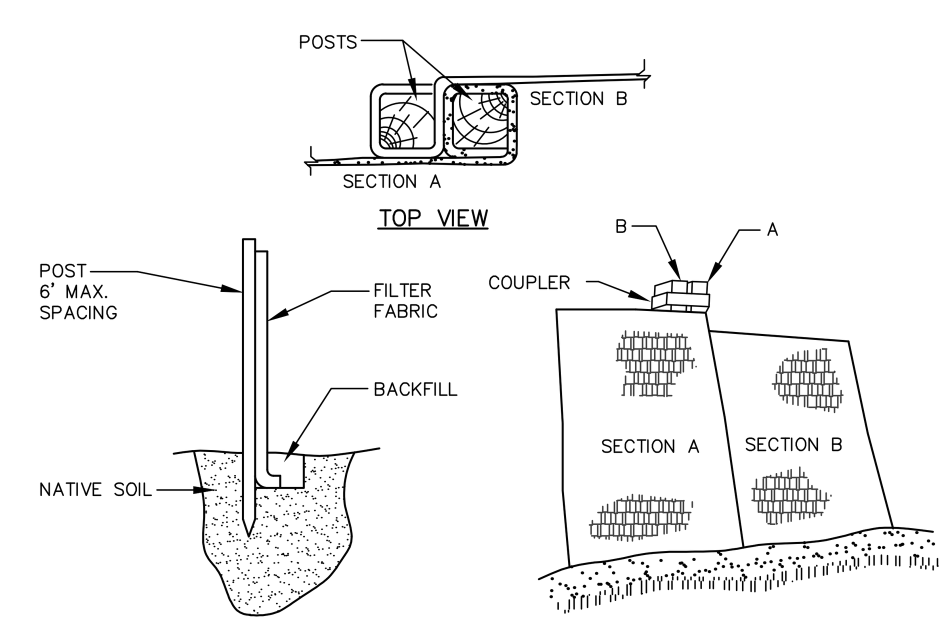

INSTALLATION:

1. EXCAVATE A 6"x 6" TRENCH ALONG THE LINE OF PLACEMENT FOR THE FILTER BARRIER.
2. UNROLL A SECTION AT A TIME AND POSITION THE POSTS AGAINST THE BACK (DOWNSTREAM) WALL OF THE TRENCH.
3. DRIVE POSTS INTO THE GROUND UNTIL APPROXIMATELY 2" OF FABRIC IS LYING ON THE TRENCH BOTTOM.
4. LAY THE TOE-IN FLAP OF FABRIC ONTO THE UNDISTURBED BOTTOM OF THE TRENCH, BACKFILL THE TRENCH AND TAMP THE SOIL. TOE-IN CAN ALSO BE ACCOMPLISHED BY LAYING THE FABRIC FLAP ON UNDISTURBED GROUND AND PILING AND TAMPING FILL AT THE BASE, BUT MUST BE ACCOMPANIED BY AN INTERCEPTION DITCH.
5. JOIN SECTION AS SHOWN ABOVE.
6. BARRIER SHALL BE MIRAFI SILT FENCE OR EQUAL.

FILTER BARRIER
NOT TO SCALE

JAMES R. SEYMOUR, PE 9984

STATE OF MAINE — JAMES R. SEYMOUR — No. 9984 — LICENSED — PROFESSIONAL ENGINEER — 09-10-18

DESIGNED	CHECKED
SAH	RLM

REV:	BY:	DATE:	STATUS:
A	RLM	9/10/18	SUMBIT TO CITY OF PORTLAND

THIS PLAN SHALL NOT BE MODIFIED WITHOUT WRITTEN PERMISSION FROM SEBAGO TECHNICS, INC. ANY ALTERATIONS, AUTHORIZED OR OTHERWISE, SHALL BE AT THE USER'S SOLE RISK AND WITHOUT LIABILITY TO SEBAGO TECHNICS. INC.

SEBAGO TECHNICS
WWW.SEBAGOTECHNICS.COM
75 John Roberts Rd.
Suite 4A
South Portland, ME 04106
Tel. 207-200-2100

EROSION CONTROL NOTES & DETAILS
OF:
PINE STATE FAMILY MART
1884 FOREST AVENUE
PORTLAND, MAINE 04103
FOR:
JOHN CHAU
75 ARCADIA ST.
PORTLAND, MAINE 04103

PROJECT NO.	SCALE
11142	NTS

11142D.dwg, TAB:D1