LOT 5 INDUSTRIAL WAY

81 INDUSTRIAL WAY
PORTLAND, ME 04103

APPLICANT:
DEERFIELD 91
INDUSTRIAL, LLC.
1 CANAL PLAZA
PORTLAND, ME 04101

ENGINEER/SURVEYOR:

SEBAGO TECHNICS
WWW.SEBAGOTECHNICS.COM
75 John Roberts Rd. Suite 1A South Portland, ME 04106 Tel. 207-200-2100
250 Goddard Rd. Suite B Lewiston, ME 04240 Tel. 207-783-5656

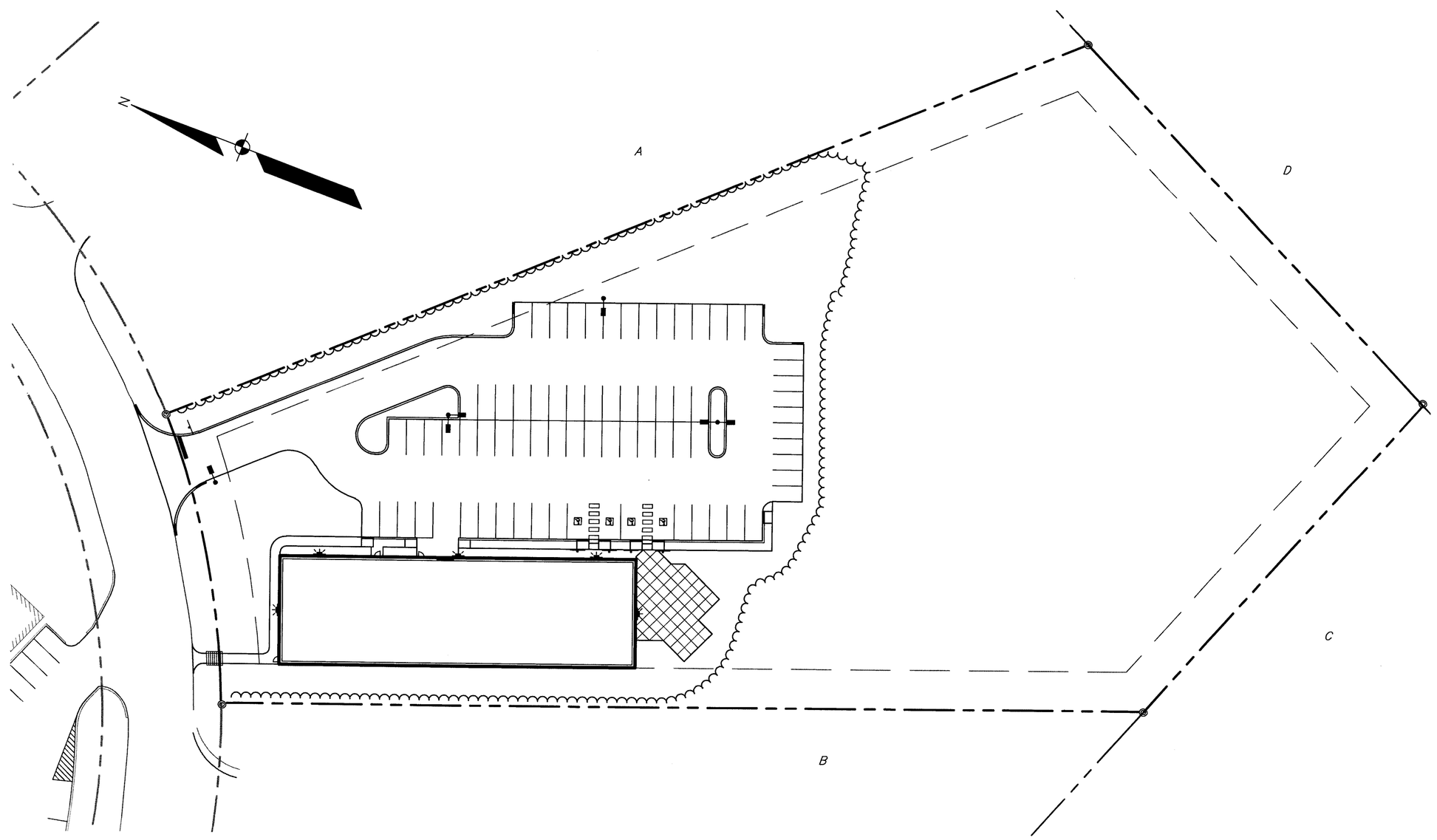

SCALE: 1" = 40'

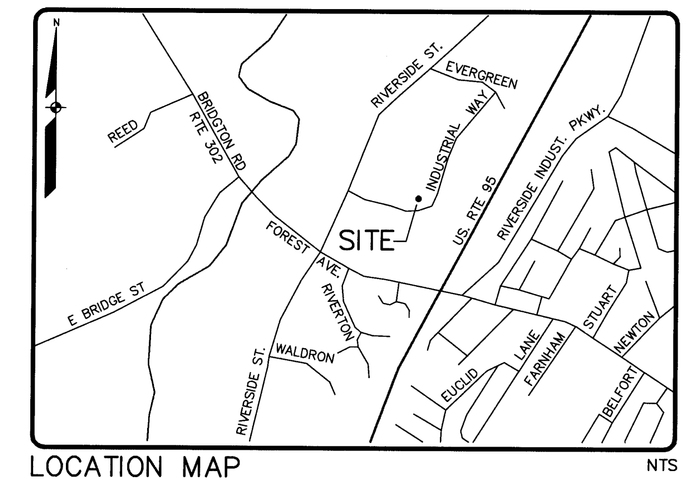

LOCATION MAP NTS

SHEET INDEX

SHEET	TITLE
1	COVER
2	EXISTING CONDITIONS PLAN
3	SITE PLAN
4	GRADING AND UTILITY PLAN
5	LANDSCAPE PLAN
6	DETAILS
7	DETAILS

LIST OF ABUTTERS:

KEY	ABUTTER	BOOK/PAGE
A	STAG PORTLAND, LLC	17249/278
B	DIRIGO CAPITAL HOLDINGS, LLC	24876/5
C	HANNAFORD BROS. CO.	20702/308
D	MAINE TURNPIKE AUTHORITY	-

Lot # 5 Industrial Way
(81 Industrial Way)
2015-085

7-30-2015

04479C.dwg, TAB:C

REVISED THROUGH 08-21-15

Planning file copy

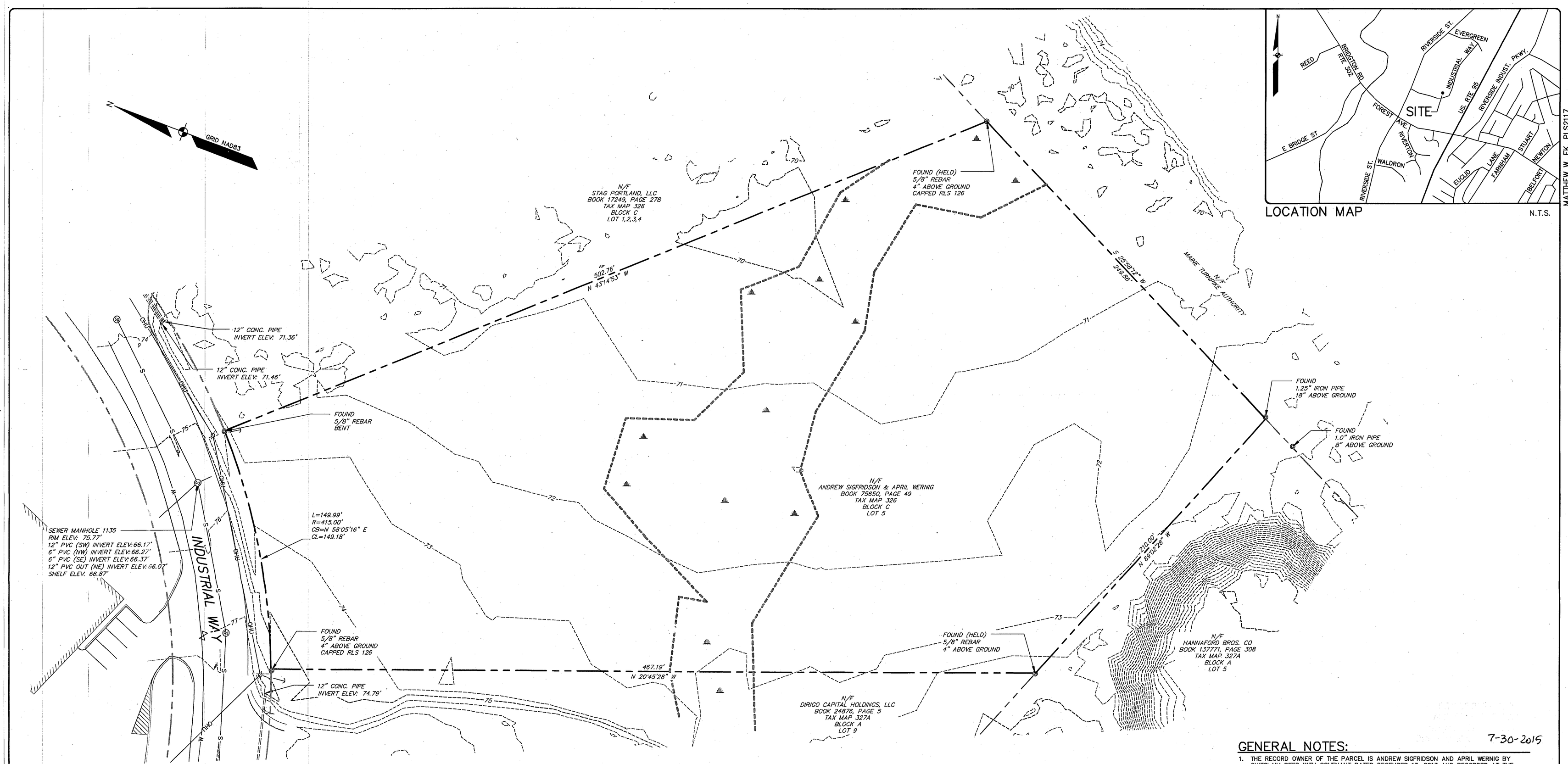

LOCATION MAP N.T.S.

7-30-2015

GENERAL NOTES:

1. THE RECORD OWNER OF THE PARCEL IS ANDREW SIGFRIDSON AND APRIL WERNIG BY QUITCLAIM DEED WITH COVENANT DATED DECEMBER 13, 2013 AND RECORDED AT THE CUMBERLAND COUNTY REGISTRY OF DEEDS ON DECEMBER 23, 2013 IN BOOK 31248, PAGE 49.
2. THE PROPERTY IS SHOWN AS LOT 5 IN BLOCK C ON THE CITY OF PORTLAND'S TAX MAP 326 AND IS LOCATED IN THE INDUSTRIAL MODERN IMPACT (IM) DISTRICT.
3. TOTAL AREA OF PARCEL IS APPROXIMATELY ±3.24 ACRES.
4. BOUNDARY AND TOPOGRAPHIC INFORMATION SHOWN HEREON IS BASED UPON A FIELD SURVEY PERFORMED BY SEBAGO TECHNICS, INC. IN APRIL OF 2015 AS WELL AS GROUND PROOFED LIDAR DATA.
5. MOST EASTERLY FOUND REBAR AND MOST SOUTHWESTERLY FOUND REBAR HELD WHEN ESTABLISHING THE SIDELINES OF LOT 5 DUE TO THEM BEING ORIGINAL CORNERS OF SUBDIVISION REFERENCED IN PLAN (SEE PLAN REFERENCE 6A)
6. PLAN REFERENCES:
   A. TURNPIKE INDUSTRIAL PARK RECORDING PLAT, RIVERSIDE STREET, BY LAND USE CONSULTANTS DATED MARCH 25, 1986, LAST REVISED SEPTEMBER 9, 1986, PLAN BOOK 157/PAGE 61
   B. RIVERSIDE SOUTH GOLF COARSE EXISTING CONDITIONS STANDARD BOUNDARY SURVEY #986-1040 RIVERSIDE STREET BY THE CITY OF PORTLAND, MAINE PUBLIC WORKS DEPARTMENT ENGINEERING DIVISION DATE MAY 2011 AND LAST REVISED APRIL 24, 2012, PLAN NUMBER 881/18
7. PLAN ORIENTATION IS GRID NORTH, MAINE STATE PLANE COORDINATE SYSTEM, WEST ZONE 1802-NAD83 BASED ON DUAL FREQUENCY GPS OBSERVATIONS. ELEVATIONS DEPICTED HEREON ARE BASED ON THE CITY OF PORTLAND'S TEMPORARY SITE BENCHMARK #8 (SEE PLAN REFERENCE 5B)
8. UTILITY INFORMATION DEPICTED HEREON IS COMPILED USING PHYSICAL EVIDENCE LOCATED IN THE FIELD. UTILITIES DEPICTED HEREON MAY NOT NECESSARILY REPRESENT ALL EXISTING UTILITIES. CONTRACTORS AND/OR DESIGNERS NEED TO CONTACT DIG-SAFE SYSTEMS, INC. (1-888-DIG-SAFE) AND FIELD VERIFY EXISTING UTILITIES PRIOR TO CONSTRUCTION AND/OR EXCAVATION.
9. THE PROPOSED DEVELOPMENT WILL BE SERVED BY PUBLIC WATER, PUBLIC SEWER AND UNDERGROUND ELECTRIC AND TELEPHONE.
10. THE LOCUS PROPERTY AS DEPICTED HEREON DOES NOT FALL WITHIN A SPECIAL FLOOD HAZARD AREA AS DELINEATED ON THE FLOOD INSURANCE RATE MAP FOR PORTLAND, MAINE, CUMBERLAND COUNTY, COMMUNITY-PANEL NUMBER 230051 0001 B, HAVING AN EFFECTIVE DATE OF JULY 17, 1986. THE LOCUS FALLS WITHIN AN AREA IDENTIFIED AS ZONE C, AREAS OF MINIMAL FLOODING.
11. A WETLAND DELINEATION WAS PERFORMED ON THIS PROJECT SITE IN OCTOBER 2013 BY GARY M. FULLERTON, CERTIFIED SOIL SCIENTIST OF SEBAGO TECHNICS, INC. AND LOCATED BY GROUND SURVEY. THIS DELINEATION CONFORMS TO THE STANDARDS AND METHODS OUTLINED IN THE 1987 WETLANDS DELINEATION MANUAL AND REGIONAL SUPPLEMENT AUTHORED AND PUBLISHED BY THE U.S. ARMY CORPS OF ENGINEERS.

LEGEND

EXISTING

- PROPERTY LINE/R.O.W.
- ABUTTER LINE/R.O.W.
- TIE LINE
- CENTERLINE
- MONUMENT
- IRON PIPE/ROD
- DRILL HOLE
- BENCHMARK DESCRIPTION WITH ELEVATION — BENCHMARK
- WETLANDS
- EDGE PAVEMENT
- CURB LINE
- 120 — 118 — CONTOURS
- WATER GATE VALVE
- S — SANITARY SEWER
- SANITARY MANHOLE
- OHU — OVERHEAD UTILITY
- UTILITY POLE
- GUY WIRE

GRAPHIC SCALE

30 0 15 30 60

(IN FEET)
1 INCH = 30 FT.

MATTHEW W. EK, PLS2117

STATE OF MAINE
MATTHEW W. EK 2117
PROFESSIONAL LAND SURVEYOR

DESIGNED	CHECKED
.	WCS

REV:	BY:	DATE:	STATUS:
B	RLM	6-29-15	SUBMIT FINAL SITE PLAN APPLICATION TO CITY
A	RLM	5-21-15	SUBMIT PRELIMINARY SITE PLAN APPLICATION TO CITY

THIS PLAN SHALL NOT BE MODIFIED WITHOUT WRITTEN PERMISSION FROM SEBAGO TECHNICS, INC. ANY ALTERATIONS, AUTHORIZED OR OTHERWISE, SHALL BE AT THE USER'S SOLE RISK AND WITHOUT LIABILITY TO SEBAGO TECHNICS, INC.

SEBAGO TECHNICS
WWW.SEBAGOTECHNICS.COM
75 John Roberts Rd. Suite B
South Portland, ME 04106
Tel. 207-200-2100
250 Goddard Rd.
Lewiston, ME 04240
Tel. 207-783-5656

EXISTING CONDITIONS PLAN

OF:
LOT 5 INDUSTRIAL WAY
81 INDUSTRIAL WAY
PORTLAND, ME 04103

FOR:
DEERFIELD 91 INDUSTRIAL, LLC.
1 CANAL PLAZA
PORTLAND, ME 04101

PROJECT NO.	SCALE
04479	1" = 30'

SHEET 2 OF 7

04479EC.dwg, TAB:EC

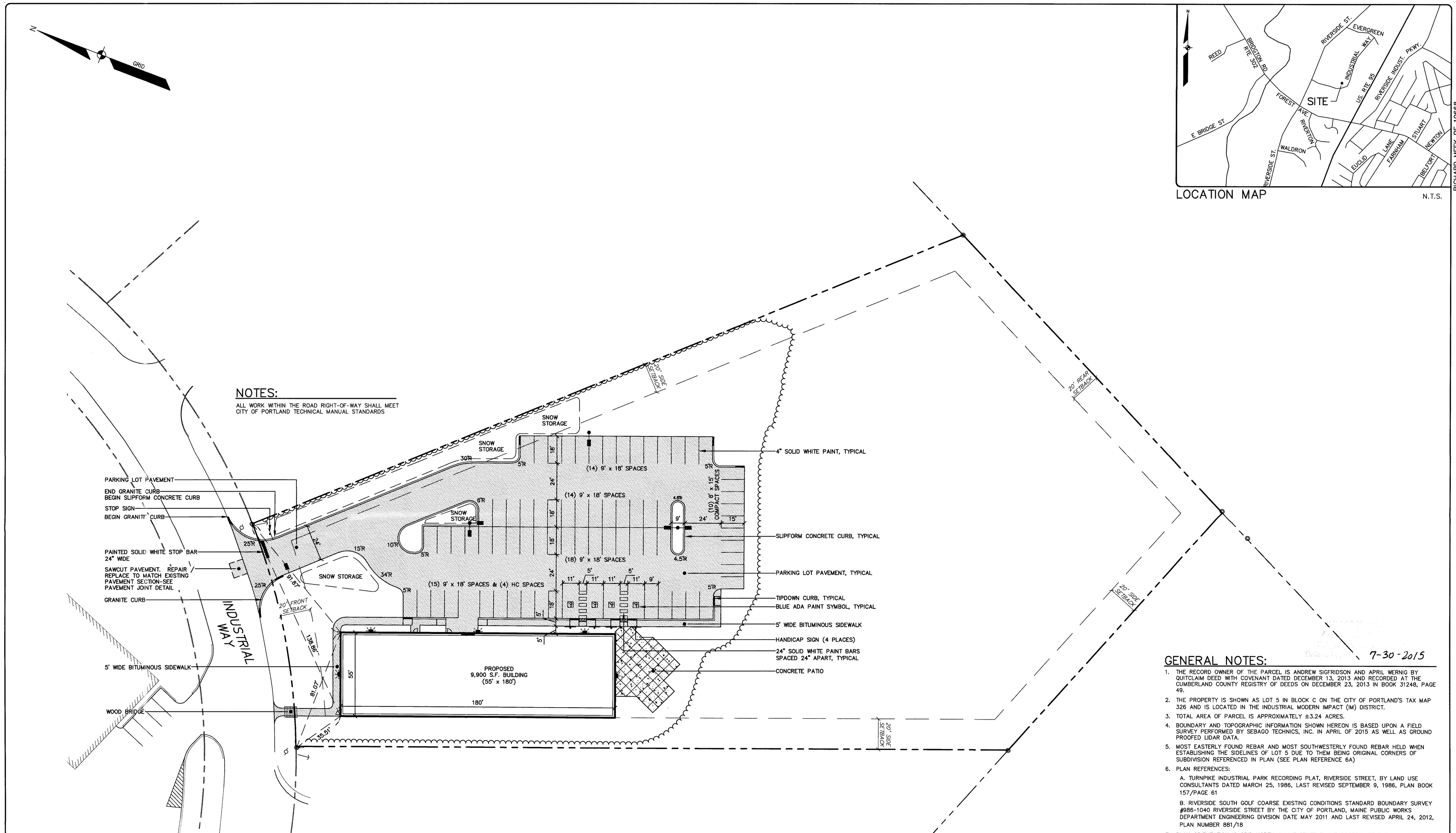

LOCATION MAP

N.T.S.

LEGEND

EXISTING		PROPOSED
	PROPERTY LINE/R.O.W.	
	ABUTTER LINE/R.O.W.	
	SETBACK	
	IRON PIPE/ROD	
	BUILDING	
	EDGE PAVEMENT	
	PAVEMENT SAWCUT	
	EDGE CONCRETE	
	PAVEMENT PAINT	
	CURB LINE	
	TREELINE	

GRAPHIC SCALE

30 0 15 30 60

(IN FEET)
1 INCH = 30 FT.

GENERAL NOTES:

1. THE RECORD OWNER OF THE PARCEL IS ANDREW SIGFRIDSON AND APRIL WERNIG BY QUITCLAIM DEED WITH COVENANT DATED DECEMBER 13, 2013 AND RECORDED AT THE CUMBERLAND COUNTY REGISTRY OF DEEDS ON DECEMBER 23, 2013 IN BOOK 31248, PAGE 49.
2. THE PROPERTY IS SHOWN AS LOT 5 IN BLOCK C ON THE CITY OF PORTLAND'S TAX MAP 326 AND IS LOCATED IN THE INDUSTRIAL MODERN IMPACT (IM) DISTRICT.
3. TOTAL AREA OF PARCEL IS APPROXIMATELY ±3.24 ACRES.
4. BOUNDARY AND TOPOGRAPHIC INFORMATION SHOWN HEREON IS BASED UPON A FIELD SURVEY PERFORMED BY SEBAGO TECHNICS, INC. IN APRIL OF 2015 AS WELL AS GROUND PROOFED LIDAR DATA.
5. MOST EASTERLY FOUND REBAR AND MOST SOUTHWESTERLY FOUND REBAR HELD WHEN ESTABLISHING THE SIDELINES OF LOT 5 DUE TO THEM BEING ORIGINAL CORNERS OF SUBDIVISION REFERENCED IN PLAN (SEE PLAN REFERENCE 6A)
6. PLAN REFERENCES:

   A. TURNPIKE INDUSTRIAL PARK RECORDING PLAT, RIVERSIDE STREET, BY LAND USE CONSULTANTS DATED MARCH 25, 1986, LAST REVISED SEPTEMBER 9, 1986, PLAN BOOK 157/PAGE 61

   B. RIVERSIDE SOUTH GOLF COARSE EXISTING CONDITIONS STANDARD BOUNDARY SURVEY #986-1040 RIVERSIDE STREET BY THE CITY OF PORTLAND, MAINE PUBLIC WORKS DEPARTMENT ENGINEERING DIVISION DATE MAY 2011 AND LAST REVISED APRIL 24, 2012, PLAN NUMBER 881/18
7. PLAN ORIENTATION IS GRID NORTH, MAINE STATE PLANE COORDINATE SYSTEM, WEST ZONE 1802-NAD83 BASED ON DUAL FREQUENCY GPS OBSERVATIONS. ELEVATIONS DEPICTED HEREON ARE BASED ON THE CITY OF PORTLAND'S TEMPORARY SITE BENCHMARK #8 (SEE PLAN REFERENCE 5B)
8. UTILITY INFORMATION DEPICTED HEREON IS COMPILED USING PHYSICAL EVIDENCE LOCATED IN THE FIELD. UTILITIES DEPICTED HEREON MAY NOT NECESSARILY REPRESENT ALL EXISTING UTILITIES. CONTRACTORS AND/OR DESIGNERS NEED TO CONTACT DIG-SAFE SYSTEMS, INC. (1-888-DIG-SAFE) AND FIELD VERIFY EXISTING UTILITIES PRIOR TO CONSTRUCTION AND/OR EXCAVATION.
9. THE PROPOSED DEVELOPMENT WILL BE SERVED BY PUBLIC WATER, PUBLIC SEWER AND UNDERGROUND ELECTRIC AND TELEPHONE.
10. THE LOCUS PROPERTY AS DEPICTED HEREON DOES NOT FALL WITHIN A SPECIAL FLOOD HAZARD AREA AS DELINEATED ON THE FLOOD INSURANCE RATE MAP FOR PORTLAND, MAINE, CUMBERLAND COUNTY, COMMUNITY-PANEL NUMBER 230051 0001 B, HAVING AN EFFECTIVE DATE OF JULY 17, 1986. THE LOCUS FALLS WITHIN AN AREA IDENTIFIED AS ZONE C, AREAS OF MINIMAL FLOODING.
11. A WETLAND DELINEATION WAS PERFORMED ON THIS PROJECT SITE IN OCTOBER 2013 BY GARY M. FULLERTON, CERTIFIED SOIL SCIENTIST OF SEBAGO TECHNICS, INC. AND LOCATED BY GROUND SURVEY. THIS DELINEATION CONFORMS TO THE STANDARDS AND METHODS OUTLINED IN THE 1987 WETLAND'S DELINEATION MANUAL AND REGIONAL SUPPLEMENT AUTHORED AND PUBLISHED BY THE U.S. ARMY CORPS OF ENGINEERS.
12. PARKING SUMMARY:

PARKING SPACES REQUIRED	1 SPACE/400 S.F.=9,900/400 = 25 SPACES
PARKING SPACES PROVIDED	61 (9'x18' STANDARD SPACES)
	10 (8'x15' COMPACT SPACES)
	4 (11'x18' HANDICAP SPACES)
	75 TOTAL SPACES

RICHARD MEEK PE 10668

STATE OF MAINE ★ RICHARD L. MEEK No. 10668 ★ PROFESSIONAL ENGINEER

DESIGNED	CHECKED
RLM	RLM

REV.	BY:	DATE:	STATUS:
D	RLM	8-21-15	REVISE PER CONDITIONS OF APPROVAL
B	RLM	6-29-15	SUBMIT FINAL SITE PLAN APPLICATION TO CITY
A	RLM	5-21-15	SUBMIT PRELIMINARY SITE PLAN APPLICATION TO CITY

THIS PLAN SHALL NOT BE MODIFIED WITHOUT WRITTEN PERMISSION FROM SEBAGO TECHNICS, INC. ANY ALTERATIONS, AUTHORIZED OR OTHERWISE, SHALL BE AT THE USER'S SOLE RISK AND WITHOUT LIABILITY TO SEBAGO TECHNICS, INC.

SEBAGO TECHNICS
WWW.SEBAGOTECHNICS.COM
75 John Roberts Rd. Suite 1A South Portland, ME 04106 Tel. 207-200-2100
250 Goddard Rd. Suite B Lewiston, ME 04240 Tel. 207-783-5856

SITE PLAN
OF:
LOT 5 INDUSTRIAL WAY
81 INDUSTRIAL WAY
PORTLAND, ME 04103
FOR:
DEERFIELD 91 INDUSTRIAL, LLC.
1 CANAL PLAZA
PORTLAND, ME 04101

PROJECT NO.	SCALE
04479	1" = 30'

SHEET 3 OF 7

04479S.dwg, TAB:S

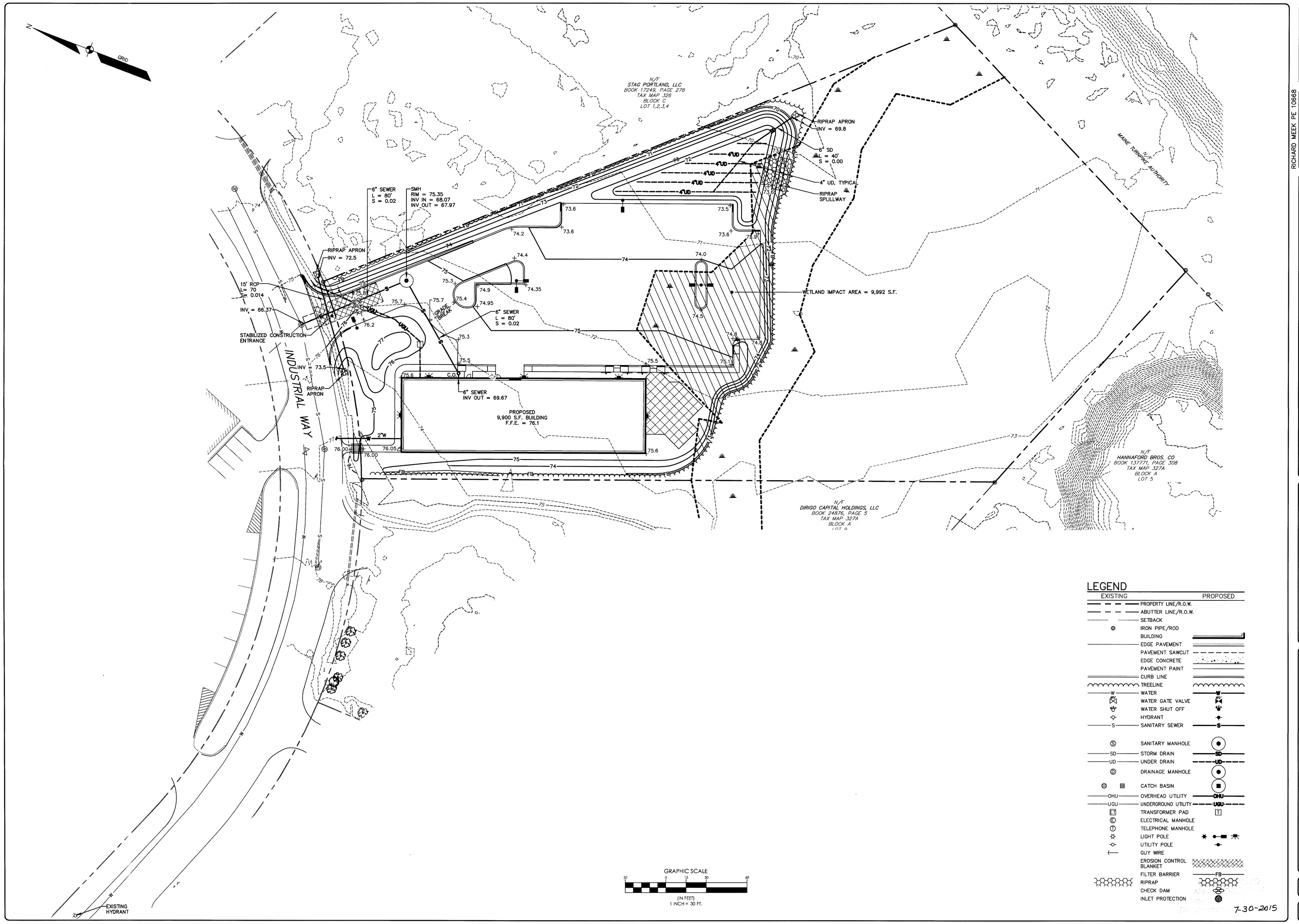

LEGEND

EXISTING		PROPOSED
	PROPERTY LINE/R.O.W.	
	ABUTTER LINE/R.O.W.	
	SETBACK	
	IRON PIPE/ROD	
	BUILDING	
	EDGE PAVEMENT	
	PAVEMENT SAWCUT	
	EDGE CONCRETE	
	PAVEMENT PAINT	
	CURB LINE	
	TREELINE	
W	WATER	W
	WATER GATE VALVE	
	WATER SHUT OFF	
	HYDRANT	
S	SANITARY SEWER	S
S	SANITARY MANHOLE	
SD	STORM DRAIN	SD
UD	UNDER DRAIN	UD
D	DRAINAGE MANHOLE	
	CATCH BASIN	
OHU	OVERHEAD UTILITY	OHU
UGU	UNDERGROUND UTILITY	UGU
	TRANSFORMER PAD	T
E	ELECTRICAL MANHOLE	
T	TELEPHONE MANHOLE	
	LIGHT POLE	
	UTILITY POLE	
	GUY WIRE	
	EROSION CONTROL BLANKET	
	FILTER BARRIER	FB
	RIPRAP	
	CHECK DAM	
	INLET PROTECTION	

7-30-2015

RICHARD MEEK PE 10668

STATE OF MAINE
RICHARD L. MEEK
No. 10668
LICENSED
PROFESSIONAL ENGINEER

DESIGNED	CHECKED
RLM	RLM

REV:	BY:	DATE:	STATUS:
D	RLM	8-21-15	REVISE PER CONDITIONS OF APPROVAL
C	RLM	6-29-15	SUBMIT FINAL SITE PLAN APPLICATION TO CITY
B	RLM	6-25-15	REVISE WETLAND IMPACT
A	RLM	5-21-15	SUBMIT PRELIMINARY SITE PLAN APPLICATION TO CITY

THIS PLAN SHALL NOT BE MODIFIED WITHOUT WRITTEN PERMISSION FROM SEBAGO TECHNICS, INC. ANY ALTERATIONS, AUTHORIZED OR OTHERWISE, SHALL BE AT THE USER'S SOLE RISK AND WITHOUT LIABILITY TO SEBAGO TECHNICS, INC.

SEBAGO TECHNICS
WWW.SEBAGOTECHNICS.COM
75 John Roberts Rd. Suite 1A
South Portland, ME 04106
Tel. 207-200-2100
250 Goddard Rd. Suite B
Lewiston, ME 04240
Tel. 207-783-3656

GRADING AND UTILITY PLAN

OF:
LOT 5 INDUSTRIAL WAY
81 INDUSTRIAL WAY
PORTLAND, ME 04103

FOR:
DEERFIELD 91 INDUSTRIAL, LLC.
1 CANAL PLAZA
PORTLAND, ME 04101

PROJECT NO.	SCALE
04479	1" = 30'

SHEET 4 OF 7

04479GU.dwg, TAB: GU

PLANT LIST

KEY	BOTANICAL NAME	COMMON NAME	SIZE
AC	AMELANCHIER CANADENSIS	SERVICEBERRY	8-10' HGT.
AR	ACER RUBRUM 'BURGUNDY BELLE'	RED MAPLE	2-2 1/2" CAL.
BN	BETULA NIGRA	RIVER BIRCH	8-10' HGT.
CA	CALAMAGROSTIS ACUTIFLORA 'KARL FORESTER'	FEATHER REED GRASS	#1 CONT.
HF	HEMEROCALLIS FULVA 'STELLA D' ORO'	DAYLILY	#1 CONT.
HM	HAKONECHLOA MACRA 'AUREOLA'	HAKONE GRASS	#1 CONT.
IS	IRIS SIBERICA 'CAESER'S BROTHER'	SIBERIAN IRIS	#1 CONT.
JS	JUNIPERUS SABINA 'CALGARY CARPET'	JUNIPER	#5 CONT.
LP	LUPINUS POLYPHYLLUS	NATIVE LUPINE	#1 CONT.
LS	LEUCANTHEMUM SUPERBUM 'BECKY'	SHASTA DAISY	#1 CONT.
ML	MAGNOLIA X 'LEONARD MESSEL'	MAGNOLIA	6-8' HGT.
NS	NYSSA SYLVATICA	TUPELO	2-2 1/2" CAL.
POS	PHYSOCARPUS OPULIFOLIUS 'SUMMER WINE'	SEWARD NINEBARK	3' HGT.
PO	PICEA OMORIKA	SERBIAN SPRUCE	6-8' HGT.
SB	SPIREA BETULIFOLIA 'TOR'	BIRCHLEAF SPIREA	24" HGT.
SJ	SPIREA JAPONICA 'MAGIC CARPET'	SPIREA	24 " HGT.
TO	THUJA OCCIDENTALIS 'SMARAGD'	ARBORVITAE	6' HGT.
UA	ULMUS AMERICANA 'VALLEY FORGE'	AMERICAN ELM	2-2 1/2" CAL.
VP	VIBURNUM PLICATUM VAR. TOMENTOSUM 'SHASTA'	SHASTA VIBURNUM	3-4' HGT.
WF	WEIGELA FLORIDA 'WINE AND ROSES'	WEIGELA	24" HGT.

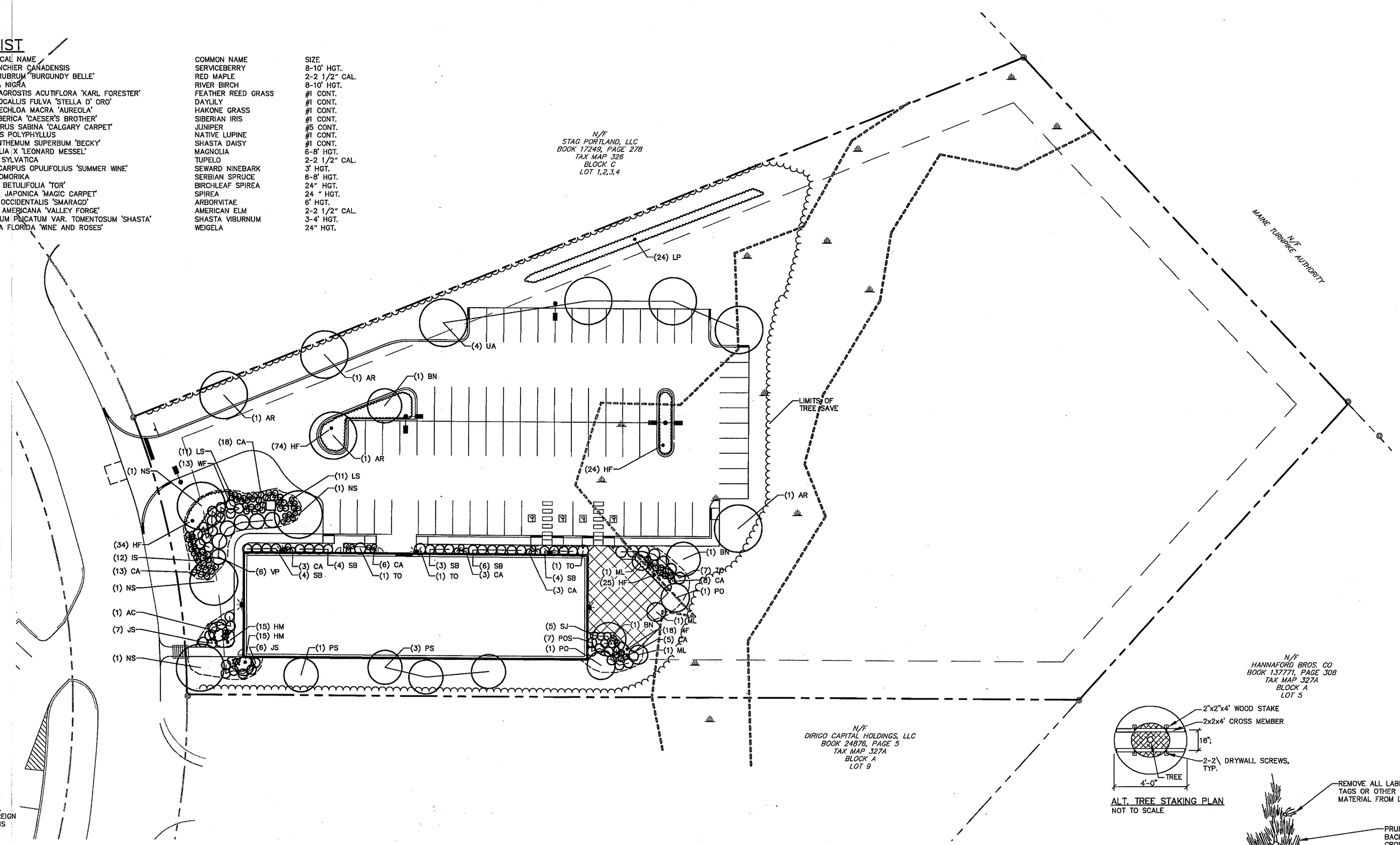

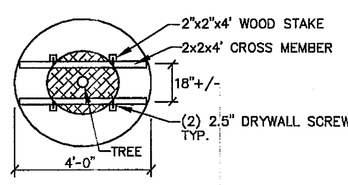

ALT. TREE STAKING PLAN
NOT TO SCALE

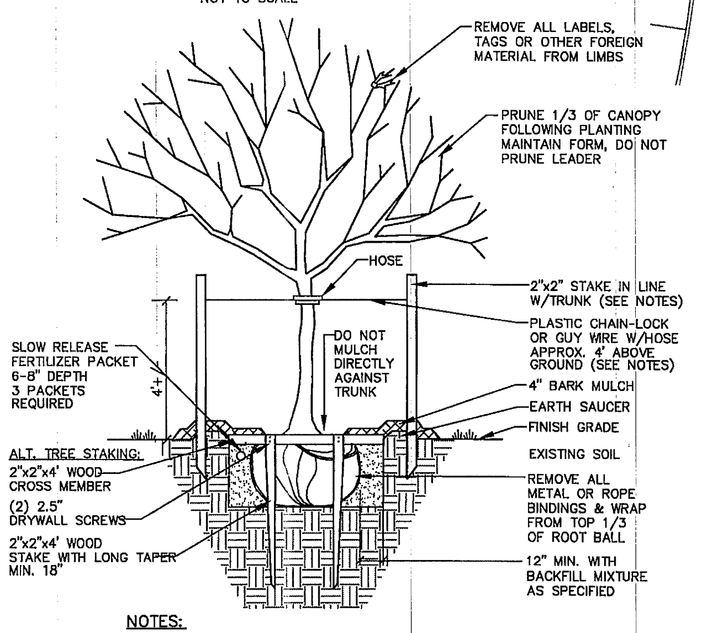

NOTES:

INSTALL STAKES AND GUYS TO TREES IF THE FOLLOWING APPLY:

1. THE TREE IS OF SUBSTANTIAL SIZE.
2. THE PLANTING LOCATION IS EXTREMELY WINDY, AS ON OPEN UNDEVELOPED SITES.
3. THE PLANTING LOCATION IS COMPRISED OF SAND OR OTHER LOOSE TEXTURED SOILS.
4. IF STAKES AND GUYS ARE REQUIRED, REMOVE AFTER ONE YEAR TIME.

DECIDUOUS TREES 2" TO 4" CALIPER
NOT TO SCALE

LEGEND

EXISTING	PROPOSED	
		PROPERTY LINE/R.O.W.
		ABUTTER LINE/R.O.W.
		SETBACK
		MONUMENT
		IRON PIPE/ROD
		DRILL HOLE
		BUILDING
		EDGE PAVEMENT
		PAVEMENT PAINT
		CURB LINE
		TREELINE
		DECIDUOUS TREE
		CONIFEROUS TREE
		MULCH LINE
		SIGN
		LIGHT POLE

GRAPHIC SCALE
20 0 10 20 40
(IN FEET)
1 INCH = 20 FT.

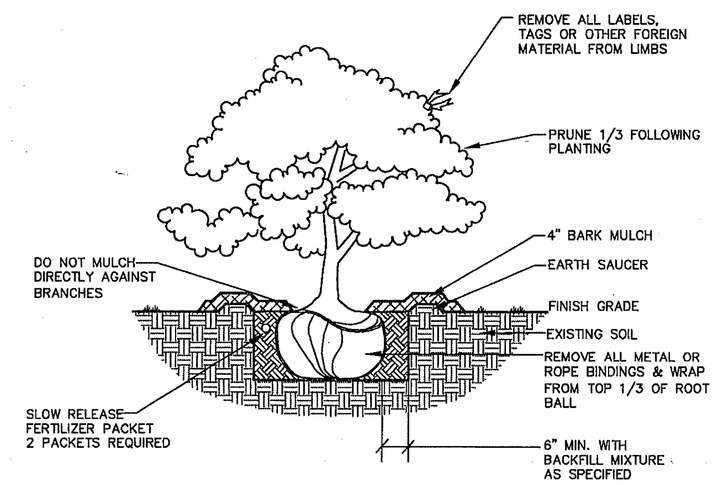

DECIDUOUS & EVERGREEN SHRUB
NOT TO SCALE

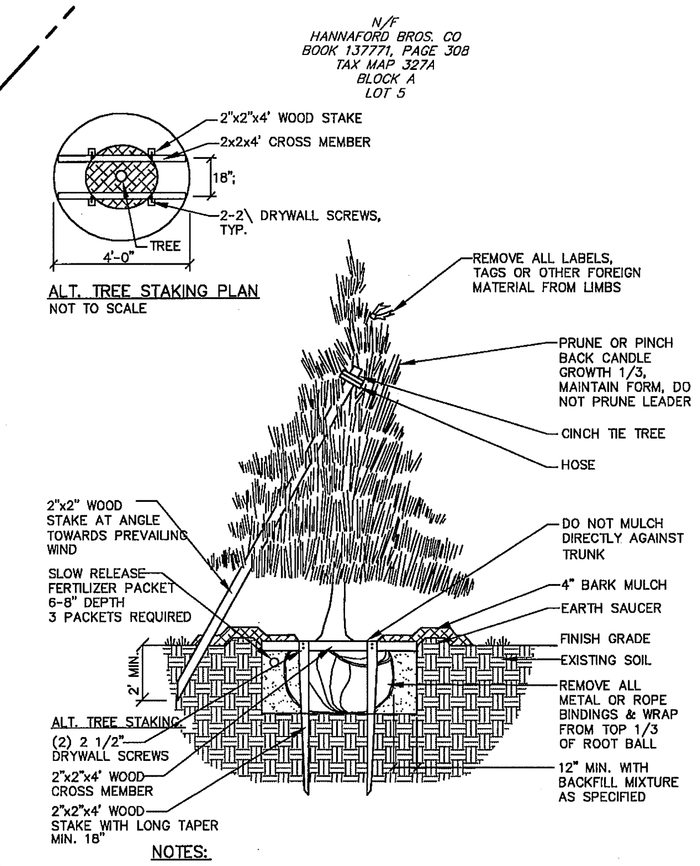

ALT. TREE STAKING PLAN
NOT TO SCALE

NOTES:

INSTALL STAKES AND GUYS TO TREES IF THE FOLLOWING APPLY:

1. THE TREE IS OF SUBSTANTIAL SIZE.
2. THE PLANTING LOCATION IS EXTREMELY WINDY, AS ON OPEN UNDEVELOPED SITES.
3. THE PLANTING LOCATION IS COMPRISED OF SAND OR OTHER LOOSE TEXTURED SOILS.
4. IF STAKES AND GUYS ARE REQUIRED, REMOVE AFTER ONE YEAR TIME.

DECIDUOUS TREES — UNDER 2" CALIPER OR UNDER 8' IN HEIGHT
EVERGREEN TREES — 7'-0" IN HEIGHT & UNDER
NOT TO SCALE

7-30-2015

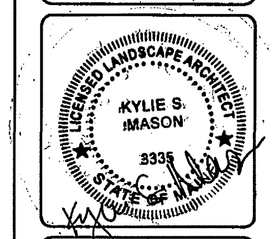

DESIGNED	CHECKED
KSM	RLM

REV:	BY:	DATE:	STATUS:
D	RLM	8-21-15	REVISE PER CONDITIONS OF APPROVAL
C	RLM	7-27-15	REVISE LANDSCAPING PER REVIEW COMMENTS
B	RLM	6-29-15	SUBMIT FINAL SITE PLAN APPLICATION TO CITY
A	RLM	5-21-15	SUBMIT PRELIMINARY SITE PLAN APPLICATION TO CITY

THIS PLAN SHALL NOT BE MODIFIED WITHOUT WRITTEN PERMISSION FROM SEBAGO TECHNICS, INC. ANY ALTERATIONS, AUTHORIZED OR OTHERWISE, SHALL BE AT THE USER'S SOLE RISK AND WITHOUT LIABILITY TO SEBAGO TECHNICS, INC.

SEBAGO TECHNICS
WWW.SEBAGOTECHNICS.COM
75 John Roberts Rd. Suite 1
South Portland, ME 04106
Tel. 207-200-2100
250 Goddard Rd.
Lewiston, ME 04240
Tel. 207-783-5656

LANDSCAPE PLAN
OF:
LOT 5 INDUSTRIAL WAY
81 INDUSTRIAL WAY
PORTLAND, ME 04103
FOR:
DEERFIELD 91 INDUSTRIAL, LLC.
1 CANAL PLAZA
PORTLAND, ME 04101

PROJECT NO.	SCALE
04479	1" = 20'

SHEET 5 OF 7

04479LdLmp, TAB:L

EROSION CONTROL MEASURES

PRE-CONSTRUCTION PHASE

PRIOR TO THE BEGINNING OF ANY CONSTRUCTION, SEDIMENT BARRIERS (SILT FENCE) WILL BE STAKED/INSTALLED ACROSS THE SLOPE(S), ON THE CONTOUR AT OR JUST BELOW THE LIMITS OF CLEARING OR GRUBBING, AND/OR JUST ABOVE ANY ADJACENT PROPERTY LINE OR WATERCOURSE TO PROTECT AGAINST CONSTRUCTION RELATED EROSION. THE PLACEMENT OF SEDIMENT BARRIERS SHALL BE COMPLETED IN ACCORDANCE WITH GUIDELINES ESTABLISHED IN BEST MANAGEMENT PRACTICES AND IN ACCORDANCE WITH THIS EROSION CONTROL PLAN AND DETAILS IN THIS PLAN SET. THIS NETWORK IS TO BE MAINTAINED BY THE CONTRACTOR UNTIL ALL EXPOSED SLOPES HAVE AT LEAST 85%-90% VIGOROUS PERENNIAL VEGETATIVE COVER TO PREVENT EROSION. TEMPORARY EROSION CONTROL MEASURES SHALL BE REMOVED WITHIN 30 DAYS AFTER PERMANENT STABILIZATION IS ATTAINED.

PRIOR TO ANY CLEARING OR GRUBBING, A CONSTRUCTION ENTRANCE/EXIT SHALL BE CONSTRUCTED AT THE INTERSECTION OF THE PROPOSED ENTRANCES AND EXISTING ROADWAY TO AVOID TRACKING OF MUD, DUST AND DEBRIS FROM THE SITE.

PRIOR TO CONSTRUCTION, THE CONTRACTOR SHALL PREPARE A DETAILED SCHEDULE AND MARKED UP PLAN INDICATING AREAS AND COMPONENTS OF THE WORK AND KEY DATES SHOWING DATE OF DISTURBANCE AND COMPLETION OF THE WORK. THE CONTRACTOR SHALL SCHEDULE A PRE-CONSTRUCTION MEETING WITH THE MUNICIPAL STAFF. THREE COPIES OF THE SCHEDULE AND MARKED UP PLAN SHALL BE PROVIDED TO THE MUNICIPALITY THREE DAYS PRIOR TO THE SCHEDULED PRE-CONSTRUCTION MEETING. SPECIAL ATTENTION SHALL BE GIVEN TO THE 14 DAY LIMIT OF DISTURBANCE IN THE SCHEDULE ADDRESSING TEMPORARY AND PERMANENT VEGETATION MEASURES.

CONSTRUCTION AND POST-CONSTRUCTION PHASE

AREAS UNDERGOING ACTUAL CONSTRUCTION SHALL ONLY EXPOSE THAT AMOUNT OF MINERAL SOIL NECESSARY FOR PROGRESSIVE AND EFFICIENT CONSTRUCTION . AN AREA CONSIDERED OPEN IS ANY AREA NOT STABILIZED WITH PAVEMENT, VEGETATION, MULCHING, EROSION CONTROL MATS, RIPRAP OR GRAVEL BASE ON A ROAD . OPEN AREAS SHALL BE ANCHORED WITH TEMPORARY EROSION CONTROL AS SHOWN ON THE DESIGN PLANS AND AS DESCRIBED WITHIN THIS EROSION CONTROL PLAN WITHIN 14-DAYS OF DISTURBANCE. AREAS LOCATED WITHIN 100' OF STREAMS SHALL BE ANCHORED WITH TEMPORARY EROSION CONTROL WITHIN SEVEN (7) DAYS. REFER TO WINTER EROSION CONTROL NOTES FOR THE TREATMENT OF OPEN AREAS AFTER OCTOBER 1ST OF THE CONSTRUCTION YEAR.

THE CONTRACTOR MUST INSTALL ANY ADDED MEASURES WHICH MAY BE NECESSARY TO CONTROL EROSION/SEDIMENTATION FROM THE SITE DEPENDENT UPON THE ACTUAL SITE AND WEATHER CONDITIONS. CONTINUATION OF EARTHWORK OPERATIONS ON ADDITIONAL AREAS SHALL NOT BEGIN UNTIL THE EXPOSED SOIL SURFACE ON THE AREA BEING WORKED HAS BEEN STABILIZED, IN ORDER TO MINIMIZE AREAS WITHOUT EROSION CONTROL PROTECTION.

EROSION CONTROL APPLICATIONS & MEASURES

THE PLACEMENT OF EROSION CONTROL MEASURES SHALL BE COMPLETED IN ACCORDANCE WITH GUIDELINES ESTABLISHED IN BEST MANAGEMENT PRACTICES AND IN ACCORDANCE WITH THE EROSION CONTROL PLAN AND DETAILS IN THE PLAN SET.

1. TEMPORARY MULCHING:

ALL DISTURBED AREAS SHALL BE MULCHED WITH MATERIALS SPECIFIED BELOW PRIOR TO ANY STORM EVENT. ALL DISTURBED AREAS NOT FINAL GRADED WITHIN 14 DAYS SHALL BE MULCHED. ALSO, AREAS, WHICH HAVE BEEN TEMPORARILY OR PERMANENTLY SEEDED, SHALL BE MULCHED IMMEDIATELY FOLLOWING SEEDING. EROSION CONTROL BLANKETS ARE RECOMMENDED TO BE USED AT THE BASE OF GRASSED WATERWAYS AND ON SLOPES GREATER THAN 15%. MULCH ANCHORING SHOULD BE USED ON SLOPES GREATER THAN 5% AFTER SEPTEMBER 15TH OF THE CONSTRUCTION YEAR (SEE WINTER EROSION CONTROL NOTES).
TYPES OF MULCH:
HAY OR STRAW: SHALL BE APPLIED AT A RATE OF 75 LBS/1,000 S.F. (1.5 TONS PER ACRE).
EROSION CONTROL MIX: SHALL BE PLACED EVENLY AND MUST PROVIDE 100% SOIL COVERAGE. EROSION CONTROL MIX SHALL BE APPLIED SUCH THAT THE THICKNESS ON SLOPES 3:1 OR LESS IS 2 INCHES PLUS 1/2 INCH PER 20 FEET OF SLOPE UP TO 100 FEET. THE THICKNESS ON SLOPES BETWEEN 3:1 AND 2:1 SHALL BE 4 INCHES PLUS 1/2 INCH PER 20 FEET OF SLOPE UP TO 100 FEET. THIS SHALL NOT BE USED ON SLOPES GREATER THAN 2:1.
EROSION CONTROL BLANKET: SHALL BE INSTALLED SUCH THAT CONTINUOUS CONTACT BETWEEN THE MAT AND THE SOIL IS OBTAINED. INSTALL BLANKETS AND STAPLE IN ACCORDANCE WITH THE MANUFACTURER'S RECOMMENDATIONS.

2. SOIL STOCKPILES:

STOCKPILES OF SOIL OR SUBSOIL SHALL BE MULCHED WITH HAY OR STRAW AT A RATE OF 75 LBS/1,000 S.F. (1.5 TONS PER ACRE) OR WITH A FOUR-INCH LAYER OF WOOD WASTE EROSION CONTROL MIX. THIS WILL BE DONE WITHIN 24 HOURS OF STOCKING AND RE-ESTABLISHED PRIOR TO ANY RAINFALL. ANY SOIL STOCKPILE WILL NOT BE PLACED (EVEN COVERED WITH HAY OR STRAW) WITHIN 100 FEET FROM ANY NATURAL RESOURCES.

3. NATURAL RESOURCES PROTECTION:

ANY AREAS WITHIN 100 FEET FROM ANY NATURAL RESOURCES, IF NOT STABILIZED WITH A MINIMUM OF 75% MATURE VEGETATION CATCH, SHALL BE MULCHED USING TEMPORARY MULCHING (AS DESCRIBED IN PART 1. OF THIS SECTION) WITHIN 7 DAYS OF EXPOSURE OR PRIOR TO ANY STORM EVENT. SEDIMENT BARRIERS (AS DESCRIBED IN PART 4. OF THIS SECTION) SHALL BE PLACED BETWEEN ANY NATURAL RESOURCE AND THE DISTURBED AREA.
PROJECTS CROSSING THE NATURAL RESOURCE SHALL BE PROTECTED A MINIMUM DISTANCE OF 100 FEET ON EITHER SIDE FROM THE RESOURCE.

4. SEDIMENT BARRIERS:

PRIOR TO THE BEGINNING OF ANY CONSTRUCTION, SEDIMENT BARRIERS SHALL BE STAKED ACROSS THE SLOPE(S), ON THE CONTOUR AT OR JUST BELOW THE LIMITS OF CLEARING OR GRUBBING, AND/OR JUST ABOVE ANY ADJACENT PROPERTY LINE OR WATERCOURSE TO PROTECT AGAINST CONSTRUCTION RELATED EROSION. SEDIMENT BARRIERS SHALL BE MAINTAINED BY THE CONTRACTOR UNTIL ALL EXPOSED SLOPES HAVE AT LEAST 85%-90% VIGOROUS PERENNIAL VEGETATIVE COVER TO PREVENT EROSION.

SILT FENCE: SHALL BE INSTALLED PER THE DETAIL ON THE PLANS. THE EFFECTIVE HEIGHT OF THE FENCE SHALL NOT EXCEED 36 INCHES. IT IS RECOMMENDED THAT SILT FENCE BE REMOVED BY CUTTING THE FENCE MATERIALS AT GROUND LEVEL SO AS TO AVOID ADDITIONAL SOIL DISTURBANCE.

HAY BALES: SHALL BE INSTALLED PER THE DETAIL ON THE PLANS. BALES SHALL BE WIRE-BOUND OR STRING-TIED AND THESE BINDINGS MUST REMAIN PARALLEL WITH THE GROUND SURFACE DURING INSTALLATION TO PREVENT DETERIORATION OF THE BINDINGS. BALES SHALL BE INSTALLED WITHIN A MINIMUM 4 INCH DEEP TRENCH LINE WITH ENDS OF ADJACENT BALES TIGHTLY ABUTTING ONE ANOTHER.

EROSION CONTROL MIX: SHALL BE INSTALLED PER THE DETAIL ON THE PLANS. THE MIX SHALL CONSIST PRIMARILY OF ORGANIC MATERIAL AND CONTAIN A WELL-GRADED MIXTURE OF PARTICLE SIZES AND MAY CONTAIN ROCKS LESS THAN 4 INCHES IN DIAMETER. THE MIX COMPOSITION SHALL MEET THE STANDARDS DESCRIBED WITHIN THE MDEP BEST MANAGEMENT PRACTICES. NO TRENCHING IS REQUIRED FOR INSTALLATION OF THIS BARRIER.

CONTINUOUS CONTAINED BERM: SHALL BE INSTALLED PER THE DETAIL ON THE PLANS. THIS SEDIMENT BARRIER IS EROSION CONTROL MIX PLACED WITHIN A SYNTHETIC TUBULAR NETTING AND PERFORMS AS A STURDY SEDIMENT BARRIER THAT WORKS WELL ON HARD GROUND SUCH AS FROZEN CONDITIONS, TRAVELED AREAS OR PAVEMENT. NO TRENCHING IS REQUIRED FOR INSTALLATION OF THIS BARRIER.

5. TEMPORARY CHECK DAMS:

SHALL BE INSTALLED PER THE DETAIL ON THE PLANS. CHECK DAMS ARE TO BE PLACED WITHIN DITCHES/ SWALES AS SPECIFIED ON THE DESIGN PLANS IMMEDIATELY AFTER FINAL GRADING. CHECK DAMS SHALL BE 2 FEET HIGH. TEMPORARY CHECK DAMS MAY BE REMOVED ONLY AFTER THE ROADWAYS ARE PAVED AND THE VEGETATED SWALE ARE ESTABLISHED WITH AT LEAST 85%-90% OF VIGOROUS PERENNIAL GROWTH. THE AREA BENEATH THE CHECK DAM MUST BE SEEDED AND MULCHED IMMEDIATELY AFTER REMOVAL OF THE CHECK DAM.

STONE CHECK DAMS: SHOULD BE CONSTRUCTED OF 2 TO 3 INCH STONE AND PLACED SUCH THAT COMPLETE COVERAGE OF THE SWALE IS OBTAINED AND THAT THE CENTER OF THE DAM IS 6 INCHES LOWER THAT THE OUTER EDGES.

HAY BALE CHECK DAMS: WE DO NOT RECOMMEND THE USE OF HAY BALES AS CHECK DAMS.

MANUFACTURED CHECK DAMS: MANUFACTURED CHECK DAMS, AS SPECIFIED IN THE DETAIL ON THE PLANS, MAY BE USED IF AUTHORIZED BY THE PROPER LOCAL, STATE OR FEDERAL REGULATING AGENCIES. THESE UNITS SHALL BE INSTALLED IN ACCORDANCE WITH THE MANUFACTURE'S RECOMMENDATIONS.

6. STORMDRAIN INLET PROTECTION:

INLET PROTECTION SHALL BE PLACED AROUND A STORMDRAIN DROP INLETOR CURB INLET PRIOR TO PERMANENT STABILIZATION OF THE IMMEDIATE AND UPSTREAM DISTURBED AREAS. THEY SHALL BE CONSTRUCTED IN A MANNER THAT WILL FACILITATE CLEAN-OUT AND DISPOSAL OF TRAPPED SEDIMENTS AND MINIMIZE INTERFERENCE WITH CONSTRUCTION ACTIVITIES. ANY RESULTANT PONDING OF WATER FROM THE PROTECTION METHOD MUST NOT CAUSE EXCESSIVE INCONVENIENCE OR DAMAGE TO ADJACENT AREAS OR STRUCTURES.

HAY BALE DROP INLET PROTECTION: WE DO NOT RECOMMEND THE USE OF HAY BALES AS INLET PROTECTION.

CONCRETE BLOCK AND STONE INLET SEDIMENT FILTER (DROP OR CURB INLET): SHALL BE INSTALLED PER THE DETAIL ON THE PLANS. THE HEIGHT OF THE CONCRETE BLOCK BARRIER CAN VARY BUT MUST BE BETWEEN 12 AND 24 INCHES TALL. A MINIMUM OF 1 INCH CRUSHED STONE SHALL BE USED.

MANUFACTURED SEDIMENT BARRIERS AND FILTER (DROP OR CURB INLET): MANUFACTURED FILTERS, AS SPECIFIED IN THE DETAIL ON THE PLANS, MAY BE USED IF INSTALLED IN ACCORDANCE WITH THE MANUFACTURER'S RECOMMENDATIONS.

7. STABILIZED CONSTRUCTION ENTRANCE/EXIT:

PRIOR TO CLEARING AND/OR GRUBBING THE SITE A STABILIZED CONSTRUCTION ENTRANCE/EXIT SHALL BE CONSTRUCTED WHEREVER TRAFFIC WILL EXIT THE CONSTRUCTION SITE ONTO A PAVED ROADWAY IN ORDER TO MINIMIZE THE TRACKING OF SEDIMENT AND DEBRIS FROM THE CONSTRUCTION SITE ONTO PUBLIC ROADWAYS. THE ENTRANCES AND ADJACENT ROADWAY AREAS SHALL BE PERIODICALLY SWEPT OR WASHED TO FURTHER MINIMIZE THE TRACKING OF MUD, DUST OR DEBRIS FROM THE CONSTRUCTION AREA. STABILIZED CONSTRUCTION EXITS SHALL BE CONSTRUCTED IN AREAS SPECIFIED ON THE PLANS AND AS DETAILED ON THE PLANS.

8. DUST CONTROL:

DUST CONTROL DURING CONSTRUCTION SHALL BE ACHIEVED BY THE USE OF A WATERING TRUCK TO PERIODICALLY SPRINKLE THE EXPOSED ROADWAY AREAS AS NECESSARY TO REDUCE DUST DURING THE DRY MONTHS. APPLYING OTHER DUST CONTROL PRODUCTS SUCH AS CALCIUM CHLORIDE OR OTHER MANUFACTURED PRODUCTS ARE ALLOWED IF AUTHORIZED BY THE PROPER LOCAL, STATE AND/OR FEDERAL REGULATING AGENCIES. HOWEVER, IT IS THE CONTRACTOR'S ULTIMATE RESPONSIBILITY TO MITIGATE DUST AND SOIL LOSS FROM THE SITE.

9. TEMPORARY VEGETATION:

TEMPORARY VEGETATION SHALL BE APPLIED TO DISTURBED AREAS THAT WILL NOT RECEIVE FINAL GRADING FOR PERIODS UP TO 12 MONTHS. THIS PROCEDURE SHOULD BE USED EXTENSIVELY IN AREAS ADJACENT TO NATURAL RESOURCES. SEEDBED PREPARATION AND APPLICATION OF SEED SHALL BE CONDUCTED AS INDICATED IN THE PERMANENT VEGETATION SECTION OF THIS NARRATIVE. SPECIFIC SEEDS (FAST GROWING AND SHORT LIVING) SHALL BE SELECTED FROM THE MAINE EROSION AND SEDIMENT CONTROL BMP MANUAL DATED 3/2003 OR LATER. ALTERNATIVE EROSION CONTROL MEASURES SHOULD BE USED IF SEEDING CAN NOT BE DONE BEFORE SEPTEMBER 15TH OF THE CONSTRUCTION YEAR.

10. PERMANENT VEGETATION:

REVEGETATION MEASURES SHALL COMMENCE IMMEDIATELY UPON COMPLETION OF FINAL GRADING OF AREAS TO BE LOAMED AND SEEDED. THE APPLICATION OF SEED SHALL BE CONDUCTED BETWEEN APRIL 1ST AND OCTOBER 1ST OF THE CONSTRUCTION YEAR, PLEASE REFER TO THE WINTER EROSION CONTROL NOTES FOR MORE DETAIL. REVEGETATION MEASURES SHALL CONSIST OF THE FOLLOWING:

SEEDBED PREPARATION:

A. FOUR (4) INCHES OF LOAM SHALL BE SPREAD OVER DISTURBED AREAS AND SMOOTHED TO A UNIFORM SURFACE. LOAM SHALL BE FREE OF SUBSOIL, CLAY LUMPS, STONES AND OTHER OBJECTS OVER 2 INCHES OR LARGER IN ANY DIMENSION, AND WITHOUT WEEDS, ROOTS OR OTHER OBJECTIONABLE MATERIAL.

B. SOILS TESTS SHALL BE TAKEN AT THE TIME OF SOIL STRIPPING TO DETERMINE FERTILIZATION REQUIREMENTS. SOILS TESTS SHALL BE TAKEN PROMPTLY AS TO NOT INTERFERE WITH THE 14-DAY LIMIT ON SOIL EXPOSURE. BASED UPON TEST RESULTS, SOIL AMENDMENTS SHALL BE INCORPORATED INTO THE SOIL PRIOR TO FINAL SEEDING. IN LIEU OF SOIL TESTS, SOIL AMENDMENTS MAY BE APPLIED AS FOLLOWS:

ITEM	APPLICATION RATE
10-20-20 FERTILIZER (N-P205-K20 OR EQUAL)	18.4 LBS./1,000 S.F.
GROUND LIMESTONE (50% CALCIUM & MAGNESIUM OXIDE)	138 LBS./1,000 S.F.

C. WORK LIME AND FERTILIZER INTO THE SOIL AS NEARLY AS PRACTICAL TO A DEPTH OF 4 INCHES WITH PROPER EQUIPMENT. ROLL THE AREA TO FIRM THE SEEDBED EXCEPT ON CLAY OR SILTY SOILS OR COARSE SAND.

APPLICATION OF SEED:

A. SEEDING: SHALL BE CONDUCTED BETWEEN APRIL 1ST AND OCTOBER 1ST OF THE CONSTRUCTION YEAR. GENERALLY A SEED MIXTURE MAY BE APPLIED AS FOLLOWS: (MDEP SEED MIX 2 IS DISPLAYED)

SEED TYPE	APPLICATION RATE
CREEPING RED FESCUE	0.46 LBS/1,000 S.F. (20 LBS/ACRE)
REDTOP	0.05 LBS/1,000 S.F. (2 LBS/ACRE)
TALL FESCUE	0.46 LBS/1,000 S.F. (20 LBS/ACRE)
TOTAL:	0.97 LBS/1,000 S.F. (42 LBS/ACRE)

NOTE: A SPECIFIC SEED MIXTURE SHOULD BE CHOSEN TO MATCH THE SOILS CONDITION OF THE SITE. VARIOUS AGENCIES CAN RECOMMEND SEED MIXTURES. MDEP RECOMMENDED SEED MIXTURES ARE IN THE EROSION AND SEDIMENT CONTROL BMP MANUAL DATED 3/2003 OR LATER.

B. HYDROSEEDING: SHALL BE CONDUCTED ON PREPARED AREAS WITH SLOPES LESS THAN 2:1. LIME AND FERTILIZER MAY BE APPLIED SIMULTANEOUSLY WITH THE SEED. RECOMMENDED SEEDING RATES MUST BE INCREASED BY 10% WHEN HYDROSEEDING.

C. MULCHING: SHALL COMMENCE IMMEDIATELY AFTER SEED IS APPLIED. REFER TO THE TEMPORARY MULCHING SECTION OF THIS NARRATIVE FOR DETAILS.

SODDING:

FOLLOWING SEEDBED PREPARATION, SOD CAN BE APPLIED IN LIEU OF SEEDING IN AREAS WHERE IMMEDIATE VEGETATION IS MOST BENEFICIAL SUCH AS DITCHES, AROUND STORMWATER DROP INLETS AND AREAS OF AESTHETIC VALUE. SOD SHOULD BE LAID AT RIGHT ANGLES TO THE DIRECTION OF FLOW, STARTING AT THE LOWEST ELEVATION. SOD SHOULD BE ROLLED OR TAMPED DOWN TO EVEN OUT THE JOINTS ONCE LAID DOWN. WHERE FLOW IS PREVALENT THE SOD MUST BE PROPERLY ANCHORED DOWN. IRRIGATE THE SOD IMMEDIATELY AFTER INSTALLATION. IN MOST CASES, SOD CAN BE ESTABLISHED BETWEEN APRIL 1ST AND NOVEMBER 15TH OF THE CONSTRUCTION YEAR, HOWEVER, REFER TO THE WINTER EROSION CONTROL NOTES FOR ANY ACTIVITIES AFTER OCTOBER 1ST.

TRENCH DEWATERING AND TEMPORARY STREAM DIVERSION:

WATER FROM CONSTRUCTION TRENCH DEWATERING OR TEMPORARY STREAM DIVERSION WILL PASS FIRST THROUGH A FILTER BAG OR SECONDARY CONTAINMENT STRUCTURE (E.G. HAY BALE LINED POOL) PRIOR TO DISCHARGE. THE DISCHARGE SITE SHALL BE SELECTED TO AVOID FLOODING AND SEDIMENT DISCHARGES TO A PROTECTED RESOURCE. IN NO CASE SHALL THE FILTER BAG OR CONTAINMENT STRUCTURE BE LOCATED WITHIN 100 FEET OF A PROTECTED NATURAL RESOURCE.

STANDARDS FOR TIMELY STABILIZATION:

STANDARD FOR THE TIMELY STABILIZATION OF DISTURBED SLOPES -- THE CONTRACTOR WILL CONSTRUCT AND STABILIZE STONE-COVERED SLOPES BY NOVEMBER 15. THE CONTRACTOR WILL SEED AND MULCH ALL SLOPES TO BE VEGETATED BY SEPTEMBER 15. THE MDEP WILL CONSIDER ANY AREA HAVING A GRADE GREATER THAN 15% (6.67H:1V) TO BE A SLOPE. IF THE CONTRACTOR FAILS TO STABILIZE ANY SLOPE TO BE VEGETATED BY SEPTEMBER 15, THEN THE CONTRACTOR WILL TAKE ONE OF THE FOLLOWING ACTIONS TO STABILIZE THE SLOPE FOR LATE FALL AND WINTER.

A. STABILIZE THE SOIL WITH TEMPORARY VEGETATION AND EROSION CONTROL MATS -- BY OCTOBER 1 THE CONTRACTOR WILL SEED THE DISTURBED SLOPE WITH WINTER RYE AT A SEEDING RATE OF 3 POUNDS PER 1,000 SQUARE FEET AND APPLY EROSION CONTROL MATS OVER THE MULCHED SLOPE. THE CONTRACTOR WILL MONITOR GROWTH OF THE RYE OVER THE NEXT 30 DAYS. IF THE RYE FAILS TO GROW AT LEAST THREE INCHES OR COVER AT LEAST 75% OF THE DISTURBED SLOPE BY NOVEMBER 1, THEN THE APPLICANT WILL COVER THE SLOPE WITH A LAYER OF WOOD WASTE COMPOST AS DESCRIBED IN ITEM 2(C.) OF THIS STANDARD OR WITH STONE RIPRAP AS DESCRIBED IN ITEM 2(D.) OF THIS STANDARD.

B. STABILIZE THE SLOPE WITH SOD -- THE CONTRACTOR WILL STABILIZE THE DISTURBED SLOPE WITH PROPERLY INSTALLED SOD BY NOVEMBER 15. PROPER INSTALLATION INCLUDES THE APPLICANT PINNING THE SOD ONTO THE SLOPE WITH WIRE PINS, ROLLING THE SOD TO GUARANTEE CONTACT BETWEEN THE SOD AND UNDERLYING SOIL, AND WATERING THE SOD TO PROMOTE ROOT GROWTH INTO THE DISTURBED SOIL. THE APPLICANT WILL NOT USE LATE-SEASON SOD INSTALLATION TO STABILIZE SLOPES HAVING A GRADE GREATER THAN 33% (3H:1V).

C. STABILIZE THE SLOPE WITH WOOD WASTE COMPOST -- THE CONTRACTOR WILL PLACE A SIX-INCH LAYER OF WOOD WASTE COMPOST ON THE SLOPE BY NOVEMBER 15. PRIOR TO PLACING THE WOOD WASTE COMPOST, THE APPLICANT WILL REMOVE ANY SNOW ACCUMULATION ON THE DISTURBED SLOPE. THE APPLICANT WILL NOT USE WOOD WASTE COMPOST TO STABILIZE SLOPES HAVING GRADES GREATER THAN 50% (2H:1V) OR HAVING GROUNDWATER SEEPS ON THE SLOPE FACE.

D. STABILIZE THE SLOPE WITH STONE RIPRAP -- THE CONTRACTOR WILL PLACE A LAYER OF STONE RIPRAP ON THE SLOPE BY NOVEMBER 15. THE APPLICANT WILL HIRE A REGISTERED PROFESSIONAL ENGINEER TO DETERMINE THE STONE SIZE NEEDED FOR STABILITY AND TO DESIGN A FILTER LAYER FOR UNDERNEATH THE RIPRAP.

STANDARD FOR THE TIMELY STABILIZATION OF DISTURBED SOILS -- BY SEPTEMBER 15 THE CONTRACTOR WILL SEED AND MULCH ALL DISTURBED SOILS ON AREAS HAVING A SLOPE LESS THAN 15%. IF THE CONTRACTOR FAILS TO STABILIZE THESE SOILS BY THIS DATE, THEN THE CONTRACTOR WILL TAKE ONE OF THE FOLLOWING ACTIONS TO STABILIZE THE SOIL FOR LATE FALL AND WINTER.

A. STABILIZE THE SOIL WITH TEMPORARY VEGETATION -- BY OCTOBER 1 THE CONTRACTOR WILL SEED THE DISTURBED SOIL WITH WINTER RYE AT A SEEDING RATE OF 3 POUNDS PER 1000 SQUARE FEET, LIGHTLY MULCH THE SEEDED SOIL WITH HAY OR STRAW AT 75 POUNDS PER 1000 SQUARE FEET, AND ANCHOR THE MULCH WITH PLASTIC NETTING. THE APPLICANT WILL MONITOR GROWTH OF THE RYE OVER THE NEXT 30 DAYS. IF THE RYE FAILS TO GROW AT LEAST THREE INCHES OR COVER AT LEAST 75% OF THE DISTURBED SOIL BEFORE NOVEMBER 15, THEN THE APPLICANT WILL MULCH THE AREA FOR OVER-WINTER PROTECTION AS DESCRIBED IN ITEM 3(C.) OF THIS STANDARD.

B. STABILIZE THE SOIL WITH SOD -- THE APPLICANT WILL STABILIZE THE DISTURBED SOIL WITH PROPERLY INSTALLED SOD BY OCTOBER 1. PROPER INSTALLATION INCLUDES THE APPLICANT PINNING THE SOD ONTO THE SOIL WITH WIRE PINS, ROLLING THE SOD TO GUARANTEE CONTACT BETWEEN THE SOD AND UNDERLYING SOIL, AND WATERING THE SOD TO PROMOTE ROOT GROWTH INTO THE DISTURBED SOIL.

C. STABILIZE THE SOIL WITH MULCH -- BY NOVEMBER 15 THE APPLICANT WILL MULCH THE DISTURBED SOIL BY SPREADING HAY OR STRAW AT A RATE OF AT LEAST 150 POUNDS PER 1000 SQUARE FEET ON THE AREA SO THAT NO SOIL IS VISIBLE THROUGH THE MULCH. PRIOR TO APPLYING THE MULCH, THE APPLICANT WILL REMOVE ANY SNOW ACCUMULATION ON THE DISTURBED AREA. IMMEDIATELY AFTER APPLYING THE MULCH, THE APPLICANT WILL ANCHOR THE MULCH WITH PLASTIC NETTING TO PREVENT WIND FROM MOVING THE MULCH OFF THE DISTURBED SOIL.

CONSTRUCTION SCHEDULE

SITE IMPROVEMENTS WILL MOST LIKELY BEGIN IN SUMMER 2015 DEPENDING UPON FINAL PROJECT APPROVAL. THE FOLLOWING SCHEDULE IS ANTICIPATED FOR THE CONSTRUCTION OF THE ROADWAY IMPROVEMENTS.

SCHEDULE

1. ESTIMATED CONSTRUCTION TIME:	4 MONTHS
*2. EROSION CONTROL MEASURES PLACED.	WEEK 1
3. SITE CLEARING AND GRUBBING.	WEEK 1 - WEEK 2
4. CONSTRUCTION OF PARKING SUBBASE & BUILDING.	WEEK 3 - WEEK 16
5. STORMWATER MANAGEMENT AREA CONSTRUCTION.	WEEK 4 - WEEK 5
6. UTILITY IMPROVEMENTS.	WEEK 5 - WEEK 12
7. MULCH SPREAD FOR WINTER EROSION CONTROL.	OCT 15 OF CONSTRUCTION YEAR
8. START FINAL SEEDING ON PREPARED AREAS. (DURING GROWING SEASON.)	WEEK 8
*9. BIWEEKLY MONITORING OF VEGETATIVE GROWTH.	WEEK 10
**10. RE-SEEDING OF AREAS, IF NEEDED.	WEEK 10
**11. REMOVAL OF EROSION CONTROL DEVICES.	UPON FINAL PROJECT COMPLETION

** DATES ARE SUBJECT TO CHANGE AT THE DISCRETION OF THE ENGINEER, DEPENDING ON CONSTRUCTION PROGRESS.

INSPECTIONS/MONITORING:

1. MAINTENANCE MEASURES SHALL BE APPLIED AS NEEDED DURING THE ENTIRE CONSTRUCTION CYCLE. AFTER EACH RAINFALL, SNOW STORM OR PERIOD OF THAWING AND RUNOFF, OR AT LEAST EVERY SEVEN (7) DAYS, THE CONTRACTOR SHALL PERFORM A VISUAL INSPECTION OF ALL INSTALLED EROSION CONTROL MEASURES. THE CONTRACTOR SHALL PERFORM REPAIRS AS NEEDED TO ALLOW CONTINUED PROPER FUNCTIONING OF THE EROSION CONTROL MEASURE. THE CONTRACTOR SHALL PROVIDE THE NECESSARY REGULATING AGENCIES WITH WRITTEN DOCUMENTATION DESCRIBING DATES OF INSPECTIONS AND NECESSARY FOLLOW-UP WORK TO MAINTAIN EROSION CONTROL MEASURES MEETING THE REQUIREMENTS OF THIS PLAN.

2. FOLLOWING THE TEMPORARY AND/OR FINAL SEEDINGS, THE CONTRACTOR SHALL INSPECT THE WORK AREA SEMIMONTHLY UNTIL THE SEEDINGS HAVE BEEN ESTABLISHED. ESTABLISHED MEANS A MINIMUM OF 85%-90% OF AREAS VEGETATED WITH VIGOROUS GROWTH. RESEEDING SHALL BE CARRIED OUT BY THE CONTRACTOR WITH FOLLOW-UP INSPECTIONS IN THE EVENT OF ANY FAILURES UNTIL VEGETATION IS ADEQUATELY ESTABLISHED.

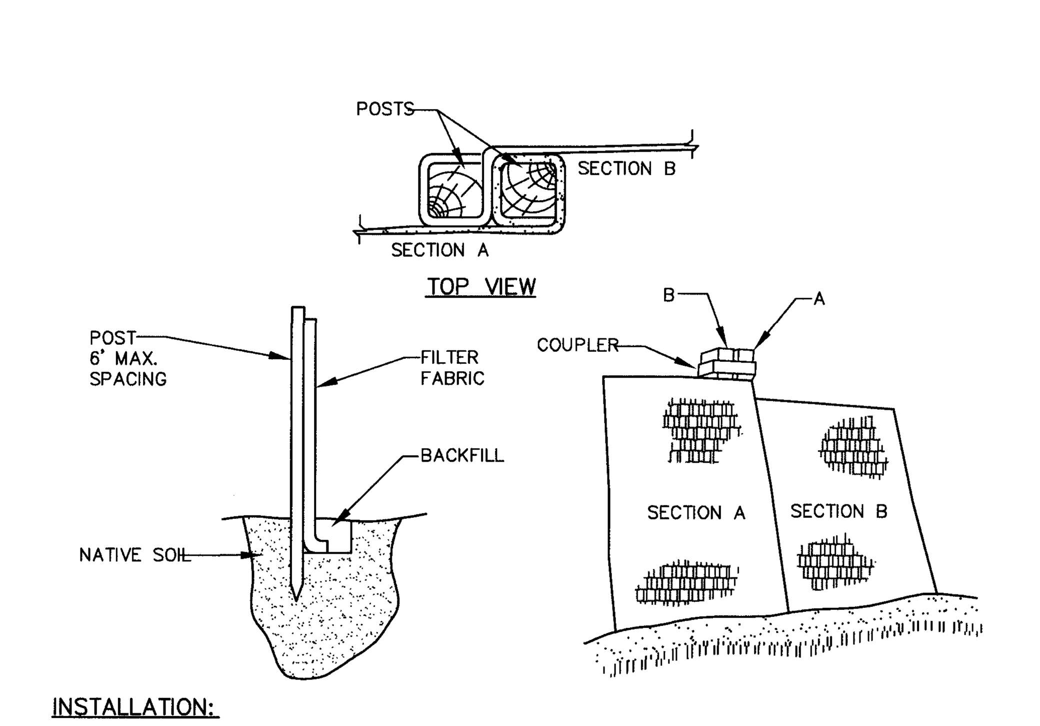

INSTALLATION:
1. EXCAVATE A 6"x 6" TRENCH ALONG THE LINE OF PLACEMENT FOR THE FILTER BARRIER.
2. UNROLL A SECTION AT A TIME AND POSITION THE POSTS AGAINST THE BACK (DOWNSTREAM) WALL OF THE TRENCH.
3. DRIVE POSTS INTO THE GROUND UNTIL APPROXIMATELY 2" OF FABRIC IS LYING ON THE TRENCH BOTTOM.
4. LAY THE TOE-IN FLAP OF FABRIC ONTO THE UNDISTURBED BOTTOM OF THE TRENCH, BACKFILL THE TRENCH AND TAMP THE SOIL. TOE-IN CAN ALSO BE ACCOMPLISHED BY LAYING THE FABRIC FLAP ON UNDISTURBED GROUND AND PILING AND TAMPING FILL AT THE BASE, BUT MUST BE ACCOMPANIED BY AN INTERCEPTION DITCH.
5. JOIN SECTION AS SHOWN ABOVE.
6. BARRIER SHALL BE MIRAFI SILT FENCE OR EQUAL.

FILTER BARRIER
NOT TO SCALE

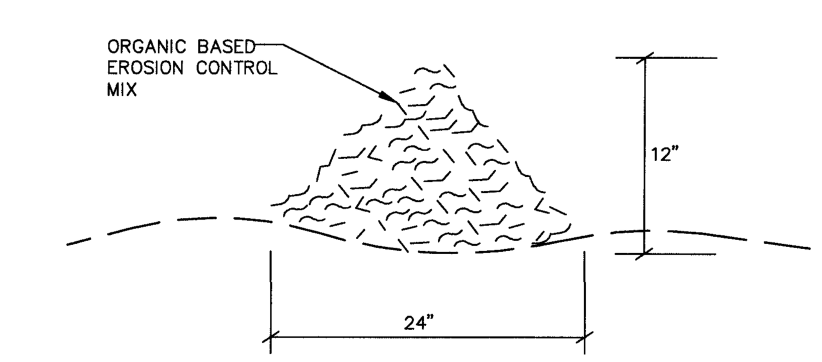

COMPOSITION

EROSION CONTROL MIX SHALL BE MANUFACTURED ON OR OFF THE PROJECT SITE SUCH THAT ITS COMPOSITION IS IN ACCORDANCE WITH THE MDEP MAINE EROSION AND SEDIMENT CONTROL BMP MANUAL, LAST REVISED 3/2003 OR LATER. IT MUST CONSIST PRIMARILY OF ORGANIC MATERIAL, SEPARATED AT THE POINT OF GENERATION, AND MAY INCLUDE: SHREDDED BARK, STUMP GRINDINGS, COMPOSTED BARK, OR ACCEPTABLE MANUFACTURED PRODUCTS. WOOD AND BARK CHIPS, GROUND CONSTRUCTION DEBRIS OR REPROCESSED WOOD PRODUCTS WILL NOT BE ACCEPTABLE AS THE ORGANIC COMPONENT OF THE MIX.

INSTALLATION:
1. THE BARRIER MUST BE PLACED ACROSS THE SLOPE, ALONG THE CONTOUR.
2. EXISTING GROUND SHALL BE PREPARED SUCH THAT THE BARRIER MAY LIE NEARLY FLAT ALONG THE GROUND TO AVOID THE CREATION OF VOIDS AND BRIDGES IN ORDER TO MINIMIZE THE POTENTIAL OF WASH OUTS UNDER THE BARRIER.
3. THE BARRIER SHALL BE A MINIMUM OF 1 FOOT HIGH (AS MEASURED ON THE UPHILL SIDE) AND 2 FEET WIDE FOR SLOPES LESS THAN 5% IN GRADE AND SHALL BE WIDER TO ACCOMMODATE THE ADDITIONAL RUNOFF.
4. EROSION CONTROL MIX CAN BE INSTALLED WHERE SILT FENCE IS ILLUSTRATED ON THE DESIGN PLANS IN AREAS EXCEPT IN, BUT NOT LIMITED TO, THE FOLLOWING AREAS: WETLAND AREAS, AT POINTS OF CONCENTRATED FLOW, BELOW CULVERT OUTLET APRONS, AROUND CATCH BASINS AND CLOSED STORM SYSTEMS AND AT THE BOTTOM OF STEEP SLOPES THAT ARE MORE THAN 50 FEET FROM TOP TO BOTTOM.

EROSION CONTROL MIX BERM
NOT TO SCALE

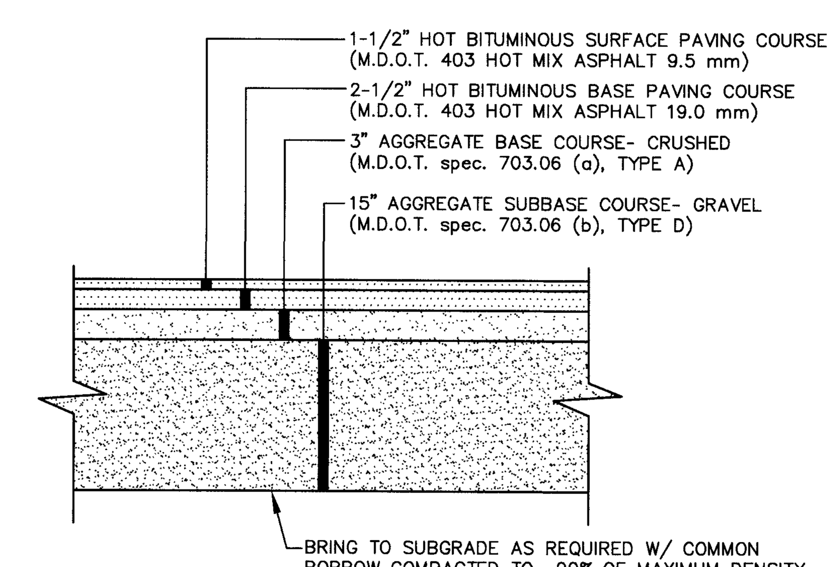

NOTES:
1. COMPACT GRAVEL SUBBASE, BASE COURSE TO 92% OF MAXIMUM DENSITY USING HEAVY ROLLER COMPACTION.
2. CONTRACTOR SHALL SET GRADE STAKES MARKING SUBBASE AND FINISH GRADE ELEVATIONS FOR CONSTRUCTION REFERENCE.
3. CONTRACTOR MAY REPLACE BITUMINOUS PAVING SECTION WITH TWO (2) 1-1/2" LIFTS OF 12.5mm SUPERPAVE MIX. SUBMIT PAVEMENT MIX DESIGN PRIOR TO CONSTRUCTION.

TYP. PAVED PARKING LOT SECTION
NOT TO SCALE

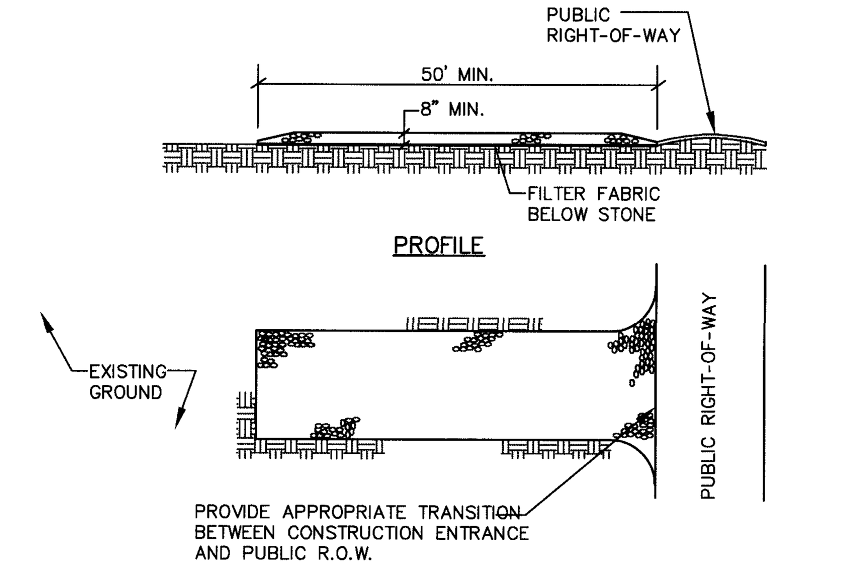

NOTES:
1. STONE SIZE- AASHTO DESIGNATION M43, SIZE NO. 2 (2 1/2" TO 1 1/2"). USE CRUSHED STONE.
2. LENGTH- AS SHOWN ON PLANS, MIN. 50 FEET.
3. THICKNESS- NOT LESS THAN EIGHT (8) INCHES.
4. WIDTH- NOT LESS THAN FULL WIDTH OF ALL POINT OF INGRESS OR EGRESS.
5. MAINTENANCE- THE ENTRANCE SHALL BE MAINTAINED IN A CONDITION WHICH WILL PREVENT TRACKING OR FLOWING OF SEDIMENT ONTO PUBLIC RIGHT-OF-WAY. THIS MAY REQUIRE PERIODIC TOP DRESSING WITH ADDITIONAL STONE AS CONDITIONS DEMAND AND REPAIR AND/OR CLEANOUT OF ANY MEASURES USED TO TRAP SEDIMENT. ALL SEDIMENT SPILLED, DROPPED, WASHED OR TRACKED ONTO PUBLIC RIGHT-OF-WAY MUST BE REMOVED IMMEDIATELY.

STABILIZED CONSTRUCTION ENTRANCE
NOT TO SCALE

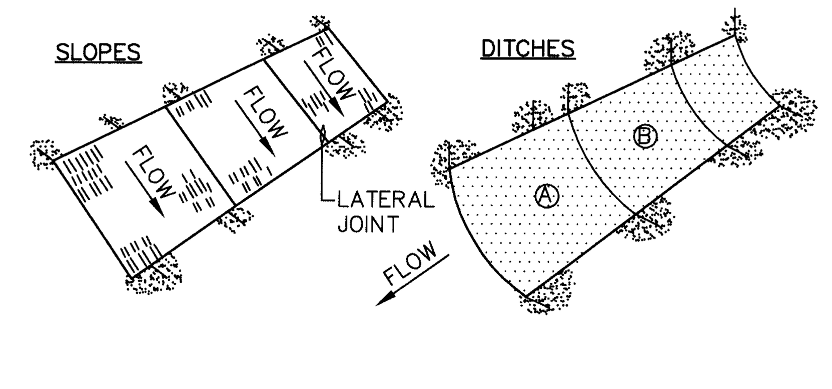

NOTES:
1. BURY THE TOP END OF THE MESH MATERIAL IN A 6" TRENCH AND BACKFILL AND TAMP TRENCHING SECURE END WITH STAPLES AT 6" SPACING, 4" DOWN FROM EXPOSED END.
2. FLOW DIRECTION JOINTS TO HAVE UPPER END OF LOWER STRIP BURIED WITH UPPER LAYERS OVERLAPPED 4" AND STAPLED. OVERLAP B OVER A.
3. LATERAL JOINTS TO HAVE 4" OVERLAP OF STRIPS. STAPLE 18" ON CENTER.
4. STAPLE OUTSIDE LATERAL EDGE 2" ON CENTER.
5. WIRE STAPLES TO BE MIN OF #11 WIRE 6" LONG AND 1-1/2" WIDE.
6. USE NORTH AMERICAN GREEN DS 150 OR APPROVED EQUAL.

EROSION CONTROL BLANKET
NOT TO SCALE

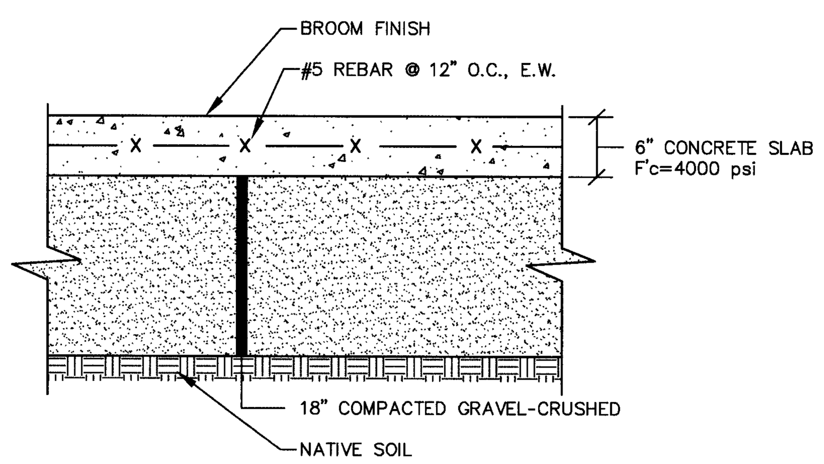

NOTE:
1. PROVIDE CONTRACTION CONTROL JOINTS EVERY 6' IN EACH DIRECTION

TYPICAL CONCRETE SLAB
NOT TO SCALE

7-30-2015

RICHARD MEEK PE 10668

STATE OF MAINE ★ RICHARD L. MEEK No. 10668 LICENSED PROFESSIONAL ENGINEER ★

DESIGNED	CHECKED
DES BY	RLM

REV:	BY:	DATE:	STATUS:
D	RLM	8-21-15	REVISE PER CONDITIONS OF APPROVAL
B	RLM	6-29-15	SUBMIT FINAL SITE PLAN APPLICATION TO CITY
A	RLM	5-21-15	SUBMIT PRELIMINARY SITE PLAN APPLICATION TO CITY

THIS PLAN SHALL NOT BE MODIFIED WITHOUT WRITTEN PERMISSION FROM SEBAGO TECHNICS, INC. ANY ALTERATIONS, AUTHORIZED OR OTHERWISE, SHALL BE AT THE USER'S SOLE RISK AND WITHOUT LIABILITY TO SEBAGO TECHNICS. INC.

SEBAGO TECHNICS
WWW.SEBAGOTECHNICS.COM
75 John Roberts Rd. Suite 1A South Portland, ME 04106 Tel. 207-200-2100
250 Goddard Rd. Suite B Lewiston, ME 04240 Tel. 207-783-5656

DETAILS
OF:
LOT 5 INDUSTRIAL WAY
81 INDUSTRIAL WAY
PORTLAND, ME 04103
FOR:
DEERFIELD 91 INDUSTRIAL, LLC.
1 CANAL PLAZA
PORTLAND, ME 04101

PROJECT NO.	SCALE
04479	NTS

04479D.dwg, TAB:D1

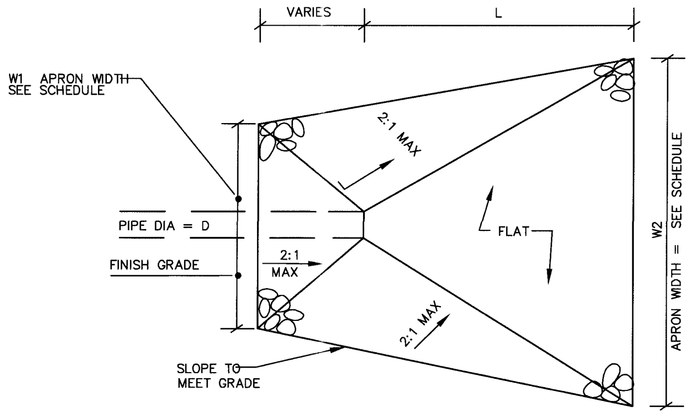

PLAN VIEW

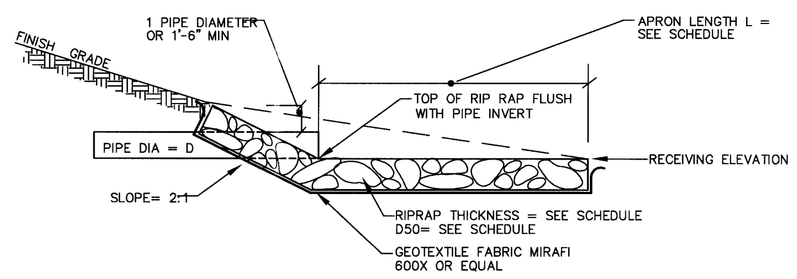

SECTION VIEW

NOTES

1. RIPRAP TO BE PROCESSED ANGULAR ROCK
2. RIPRAP GRADIATION SHALL BE A WELL GRADED MIX FROM ABOUT 1.5 TIMES D SIZE TO 25 PERCENT OF THE D SIZE
3. THE RIPRAP STONES SHALL BE CAREFULLY PLACED FROM THE TOE OF THE SLOPE UPWARD
4. STONES SHALL BE LOWERED TO THE SLOPE AND NOT BE ALLOWED TO DROP MORE THAN 6" ONTO THE GEOTEXTILE
5. THE FINISHED SURFACE SHALL BE A RELATIVELY SMOOTH, UNIFORMLY SLOPED SURFACE

TYPICAL RIPRAP APRON SCHEDULE

CULVERT DIAMETER - D (IN.)	APRON LENGTH - L (FT.)	WIDTH -W1 (FT)	WIDTH -W2 (FT)	RIPRAP D50 (IN.)	RIPRAP THICKNESS (IN.)
12	8	3	9	6	14
15	10	4	12	6	14

RIPRAP APRON

NOT TO SCALE

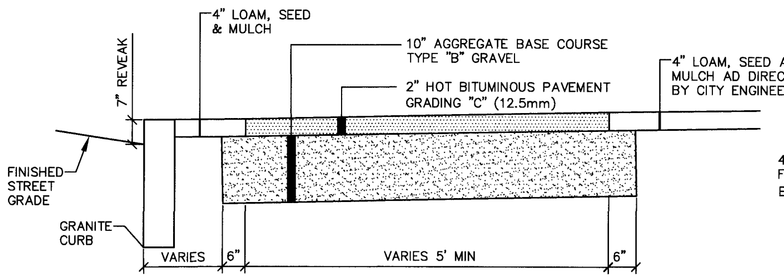

BITUMINOUS SIDEWALK

NOT TO SCALE

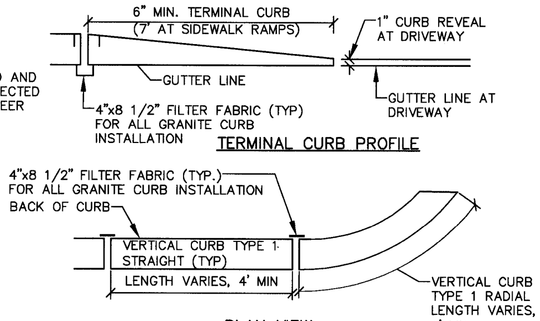

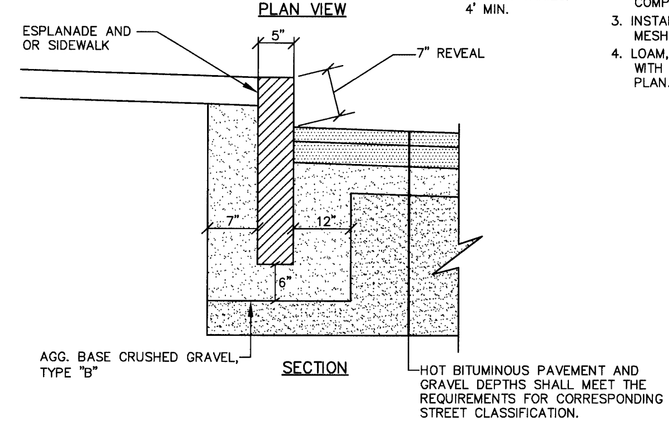

VERTICAL GRANITE CURB

NOT TO SCALE

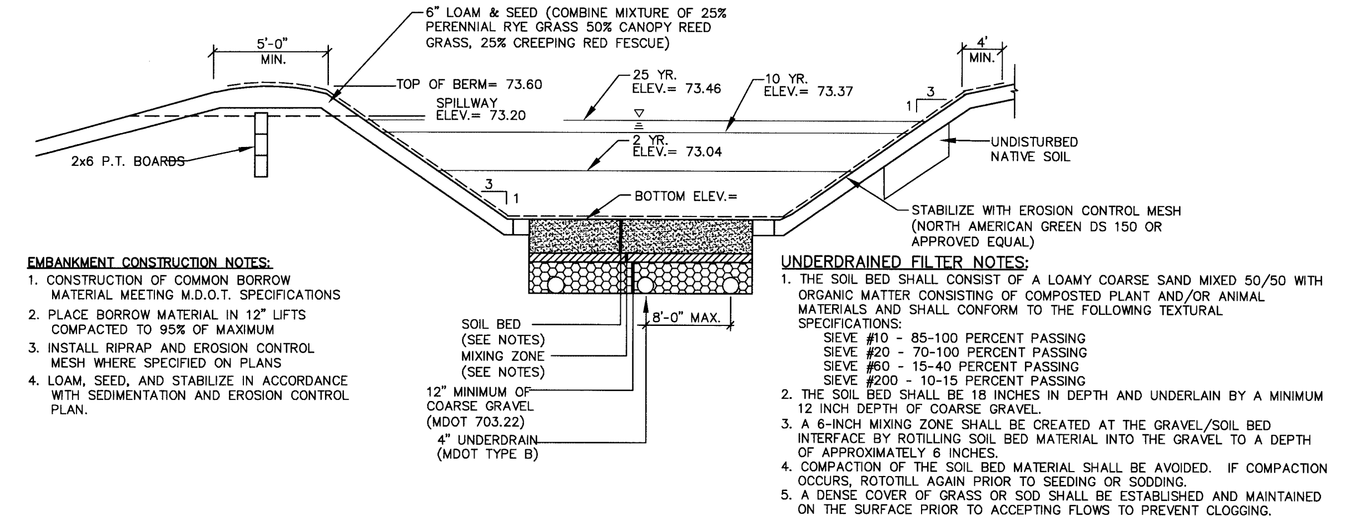

EMBANKMENT CONSTRUCTION NOTES:

1. CONSTRUCTION OF COMMON BORROW MATERIAL MEETING M.D.O.T. SPECIFICATIONS
2. PLACE BORROW MATERIAL IN 12" LIFTS COMPACTED TO 95% OF MAXIMUM
3. INSTALL RIPRAP AND EROSION CONTROL MESH WHERE SPECIFIED ON PLANS
4. LOAM, SEED, AND STABILIZE IN ACCORDANCE WITH SEDIMENTATION AND EROSION CONTROL PLAN.

UNDERDRAINED FILTER NOTES:

1. THE SOIL BED SHALL CONSIST OF A LOAMY COARSE SAND MIXED 50/50 WITH ORGANIC MATTER CONSISTING OF COMPOSTED PLANT AND/OR ANIMAL MATERIALS AND SHALL CONFORM TO THE FOLLOWING TEXTURAL SPECIFICATIONS:
   - SIEVE #10 - 85-100 PERCENT PASSING
   - SIEVE #20 - 70-100 PERCENT PASSING
   - SIEVE #60 - 15-40 PERCENT PASSING
   - SIEVE #200 - 10-15 PERCENT PASSING
2. THE SOIL BED SHALL BE 18 INCHES IN DEPTH AND UNDERLAIN BY A MINIMUM 12 INCH DEPTH OF COARSE GRAVEL.
3. A 6-INCH MIXING ZONE SHALL BE CREATED AT THE GRAVEL/SOIL BED INTERFACE BY ROTILLING SOIL BED MATERIAL INTO THE GRAVEL TO A DEPTH OF APPROXIMATELY 6 INCHES.
4. COMPACTION OF THE SOIL BED MATERIAL SHALL BE AVOIDED. IF COMPACTION OCCURS, ROTOTILL AGAIN PRIOR TO SEEDING OR SODDING.
5. A DENSE COVER OF GRASS OR SOD SHALL BE ESTABLISHED AND MAINTAINED ON THE SURFACE PRIOR TO ACCEPTING FLOWS TO PREVENT CLOGGING.

DETENTION BASIN WITH UNDERDRAINED GRASS FILTER

NOT TO SCALE

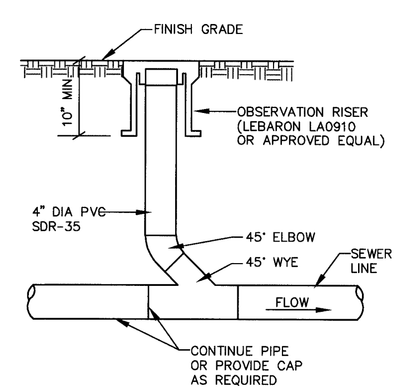

SEWER CLEANOUT

NOT TO SCALE

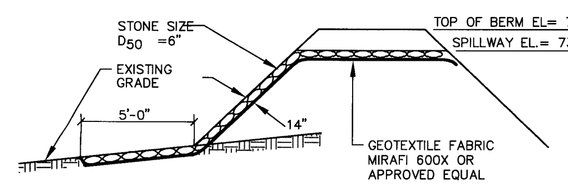

EMBANKMENT CONSTRUCTION

1. CONSTRUCTION OF COMMON BORROW MATERIAL MEETING M.D.O.T. SPECIFICATION.
2. PLACE BORROW MATERIAL IN 12" LIFTS COMPACTED TO 95% OF MAXIMUM DRY DENSITY.
3. INSTALL RIPRAP AND EROSION CONTROL MESH WHERE SPECIFIED ON PLANS
4. LOAM, SEED, AND STABILIZE IN ACCORDANCE WITH SEDIMENTATION AND EROSION CONTROL PLAN.

SPILLWAY SECTION

NOT TO SCALE

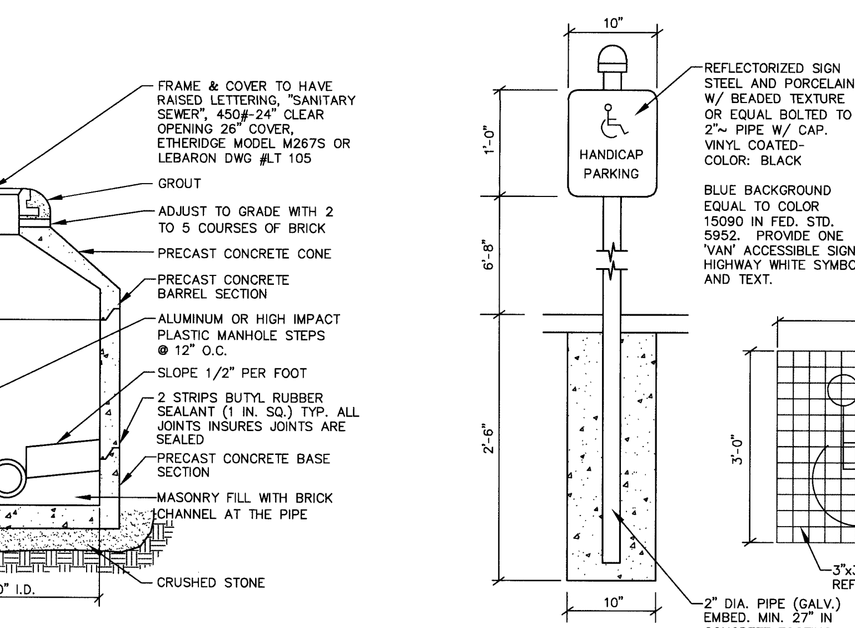

EMERGENCY SPILLWAY CROSS-SECTION

NOT TO SCALE

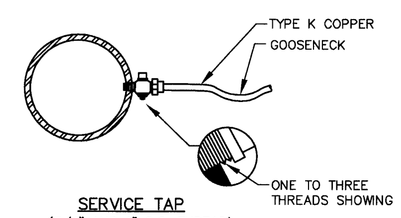

SERVICE TAP
(3/4" AND 1" C.C. THREAD)

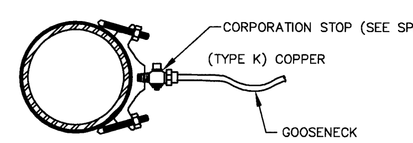

SERVICE SADDLE
(1-1/2" AND 2" C.C. THREAD)

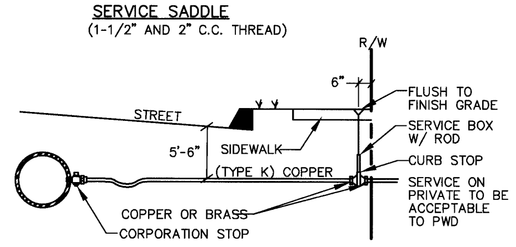

TYPICAL SERVICE CONNECTION

NOT TO SCALE

NOTES:

DEPTH OF BITUMINOUS PAVEMENT AND AGGREGATE COURSES SHALL BE DETERMINED BY STREET CLASSIFICATION.

ANY ALTERNATE TRENCHING OR PAYMENT METHODS SHALL BE APPROVED IN ADVANCE BY THE CITY OF PORTLAND, DEPARTMENT OF PUBLIC SERVICES.

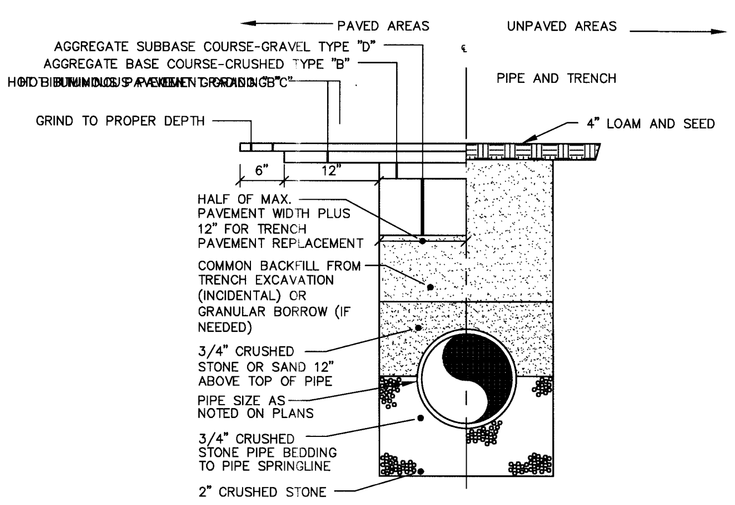

TYPICAL TRENCH SECTION

NOT TO SCALE

NOTES:

1. ALTERNATIVE CONSTRUCTION METHODS OR PAYMENT METHODS SHALL BE APPROVED IN ADVANCE BY THE CITY.
2. IN PAVED AREAS, DEPTHS OF GRAVEL AND HOT MIX ASPHALT PAVEMENT SHALL MATCH THE GRATER OF EXISTING CONDITIONS OR THE REQUIREMENTS FOR THE CORRESPONDING STREET CLASSIFICATION.
3. DIMENSION B SHALL BE SUFFICIENT TO ALLOW CRUSHED STONE BEDDING TO BE PLACES AND COMPACTED UNDER HAUNCHES OF PIPE; NUT IN ALL CASES DIMENSION B SHALL BE AT LEAST 9".
4. DIMENSION A IS THE MAXIMUM WIDTH ALLOWED FOR CALCULATING PAY QUANTITIES UNDER GRANULAR BORROW, CRUSHED STONE, STRUCTURAL EARTH EXCAVATION, AND STRUCTURAL ROCK EXCAVATION. DIMENSION A SHALL BE BASED ON PIPE DIAMETER D, AS SET FORTH IN THE FOLLOWING TABLE.

PIPE DIAMETER D (INCHES)	MAX. TRENCH WIDTH, A (FEET)
4	4.0
6	4.0
8	4.0
10	4.0
12	5.0
15	5.0
18	5.0
21	5.0
24	6.0
27	6.0
30	6.0
36	6.0
42	7.0
48	7.0

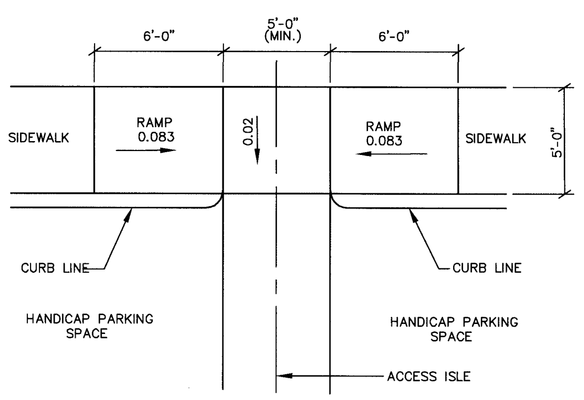

HANDICAP RAMP

NOT TO SCALE

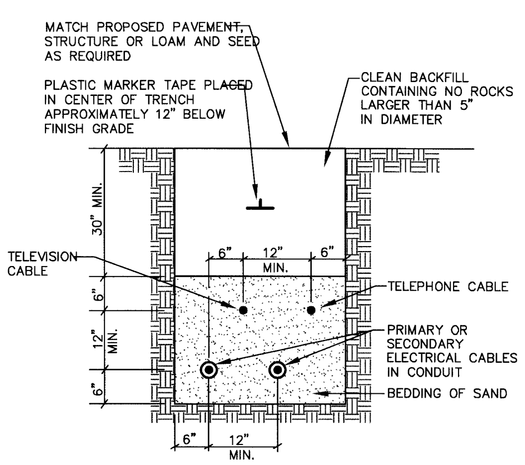

CABLES TO BE ENCASED IN SCHEDULE 40 PVC CONDUIT WHEN RUN BENEATH PAVED AREAS.

TYPICAL UNDERGROUND CABLE INSTALLATION

NOT TO SCALE

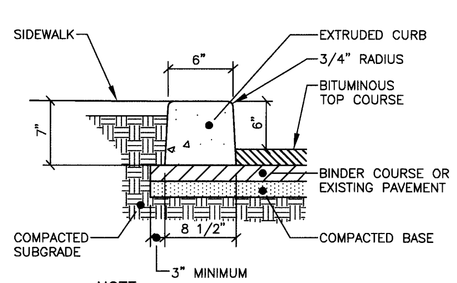

NOTE:
USE SLOPED MOLD WHENEVER CURB ABUTS LANDSCAPE AREAS.

SLIPFORM CONCRETE CURB

NOT TO SCALE

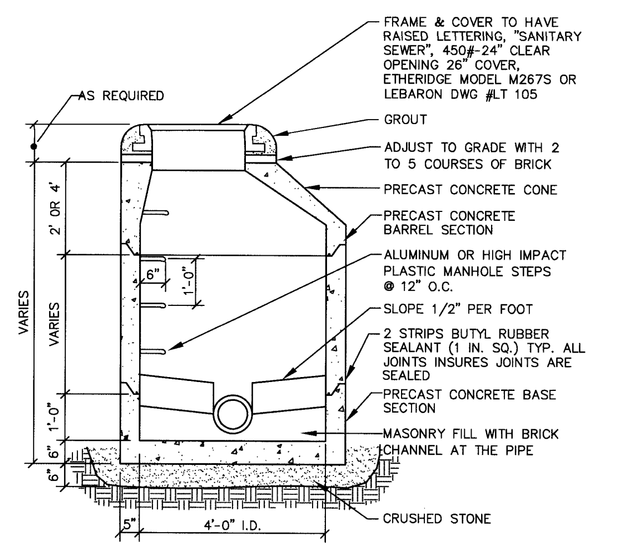

NOTE: PIPE CONNECTIONS SHALL BE WATERTIGHT FLEXIBLE BOOT CONNECTORS PROVIDES LEAKPROOF CONNECTION

PRECAST MANHOLE

NOT TO SCALE

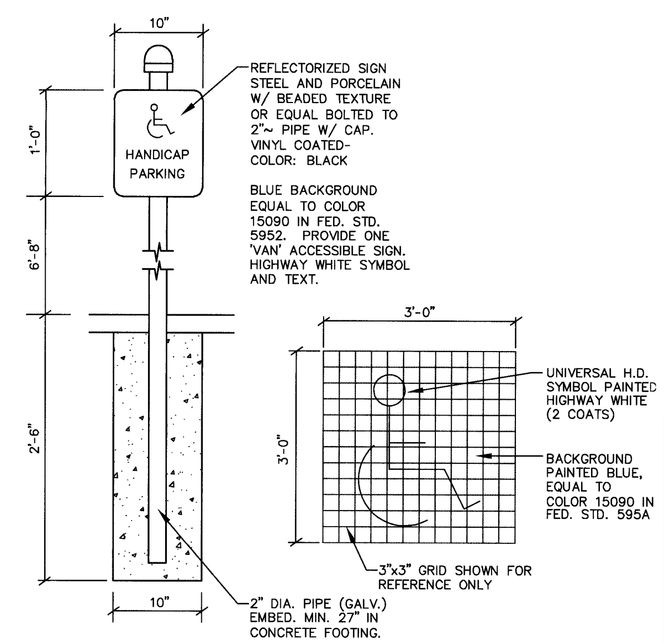

HANDICAP SIGNS

NOT TO SCALE

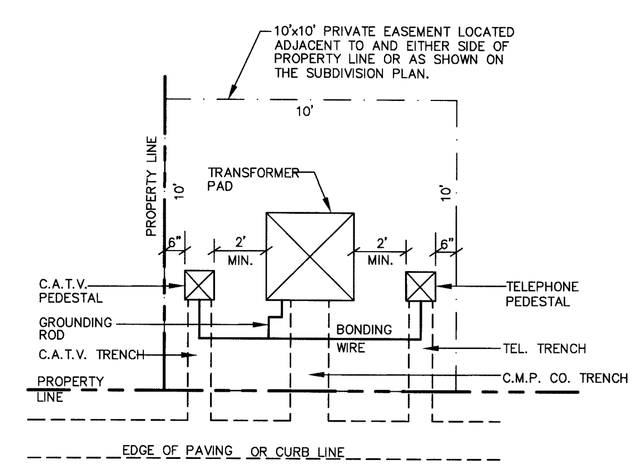

NOTE:
TRANSFORMER PAD AND COVER TO BE FIBERGLASS MEETING CENTRAL MAINE POWER SPECIFICATIONS.

TRANSFORMER DETAIL

NOT TO SCALE

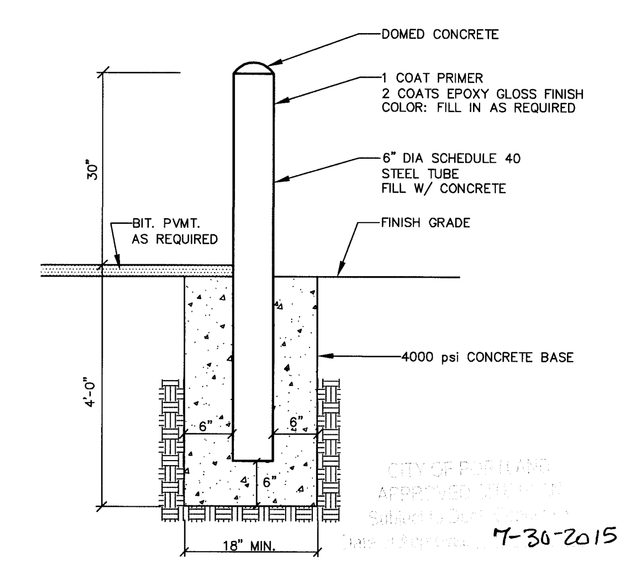

METAL BOLLARD

NOT TO SCALE

RICHARD MEEK PE 10668

STATE OF MAINE RICHARD MEEK No. 10668 LICENSED PROFESSIONAL ENGINEER

DESIGNED	CHECKED
DES BY	RLM

REV.	BY:	DATE:	
D	RLM	8-21-15	REVISE PER CONDITIONS OF APPROVAL
B	RLM	6-29-15	SUBMIT FINAL SITE PLAN APPLICATION TO CITY
A	RLM	5-21-15	SUBMIT PRELIMINARY SITE PLAN APPLICATION TO CITY

STATUS:

THIS PLAN SHALL NOT BE MODIFIED WITHOUT WRITTEN PERMISSION FROM SEBAGO TECHNICS, INC. ANY ALTERATIONS, AUTHORIZED OR OTHERWISE, SHALL BE AT THE USER'S SOLE RISK AND WITHOUT LIABILITY TO SEBAGO TECHNICS, INC.

SEBAGO TECHNICS
WWW.SEBAGOTECHNICS.COM
75 John Roberts Rd. Suite 1A South, Portland, ME 04106 Tel. 207-202-2100
250 Goddard Rd. Suite B Lewiston, ME 04240 Tel. 207-783-3565

DETAILS
OF:
LOT 5 INDUSTRIAL WAY
81 INDUSTRIAL WAY
PORTLAND, ME 04103
FOR:
DEERFIELD 91 INDUSTRIAL, LLC.
1 CANAL PLAZA
PORTLAND, ME 04101

PROJECT NO.	SCALE
04479	NTS

SHEET 7 OF 7

044790.dwg, TAB:D2