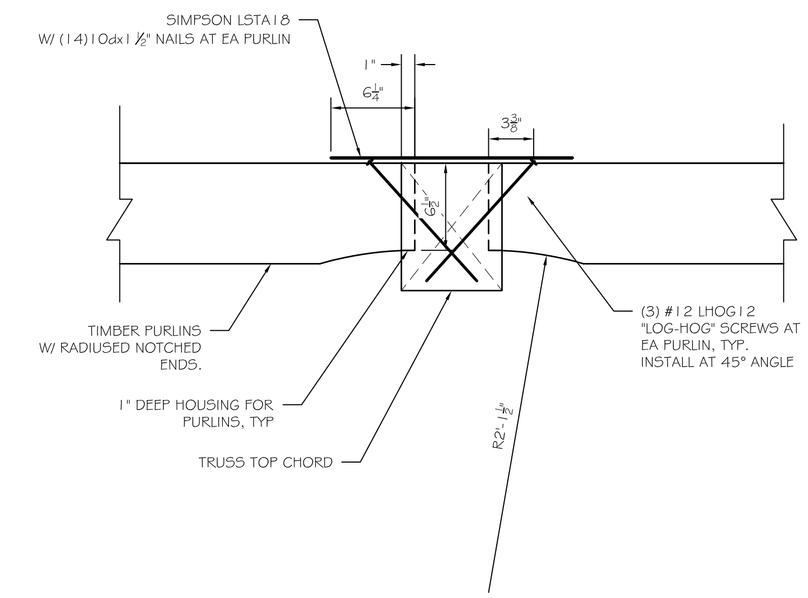

C2 TIMBER PURLIN CONNNECTION

SCALE: 1 ½" = 1'-0"

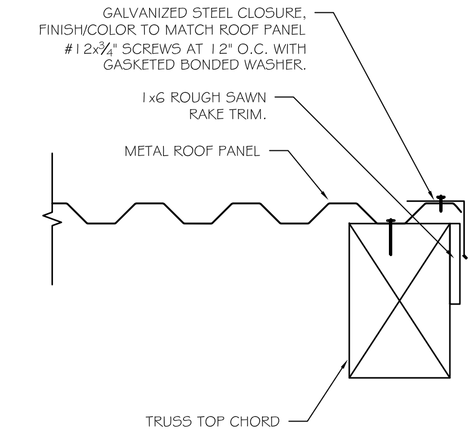

C1 GABLE END RAKE DETAIL AT TIMBER TRUSSES

SCALE: 1 ½" = 1'-0"

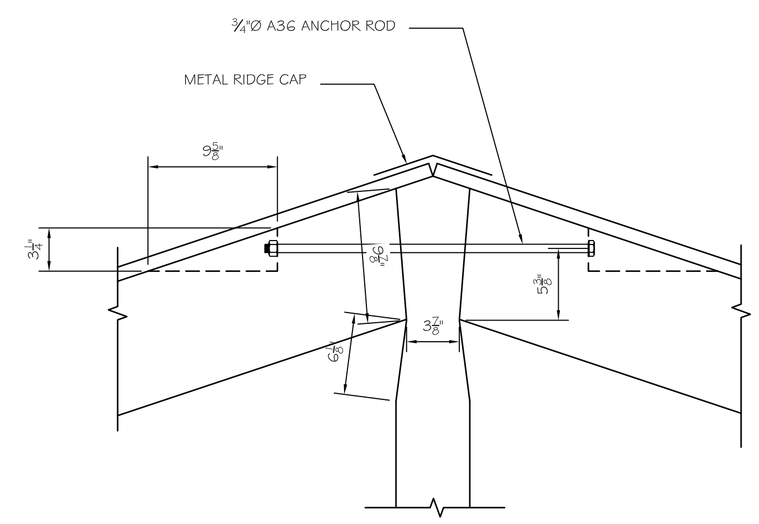

B2 RIDGE DETAIL AT TIMBER TRUSSES

SCALE: 1 1/2" = 1'-0"

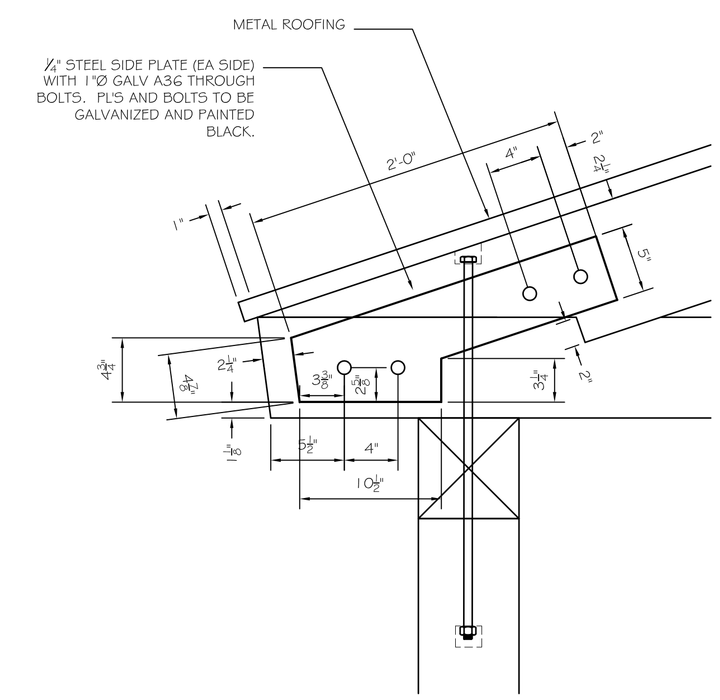

B1 EAVE DETAIL AT TIMBER TRUSSES

SCALE: 1 1/2" = 1'-0"

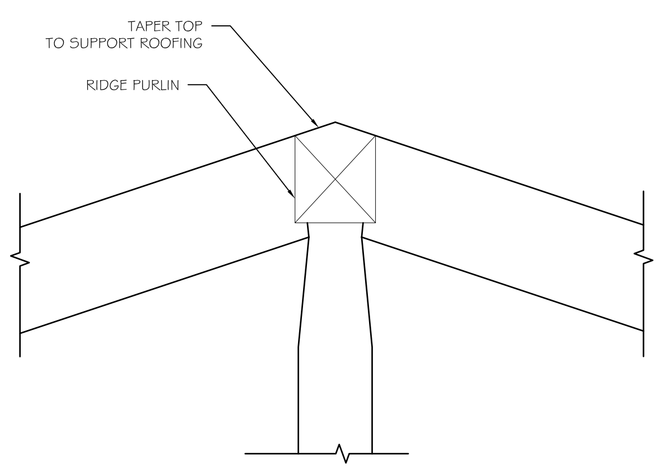

A3 RIDGE DETAIL

SCALE: 1 1/2" = 1'-0"

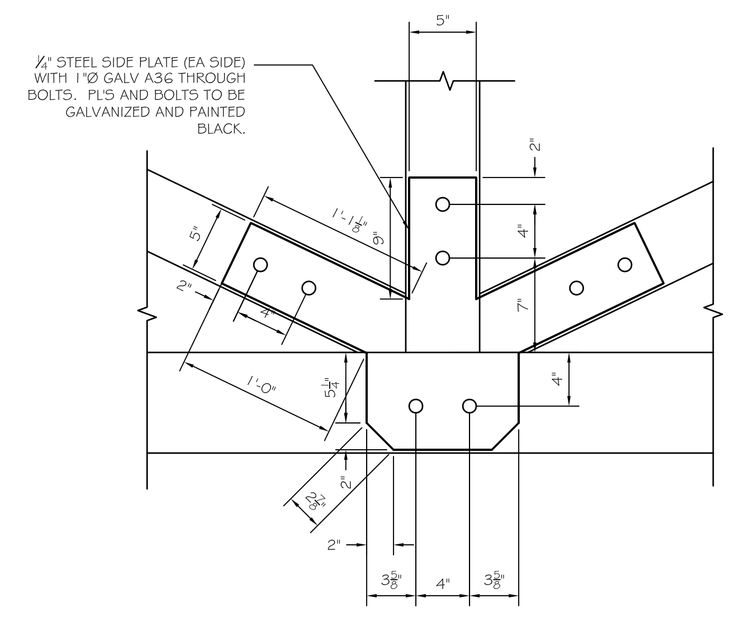

A2 DETAIL

SCALE: 1 1/2" = 1'-0"

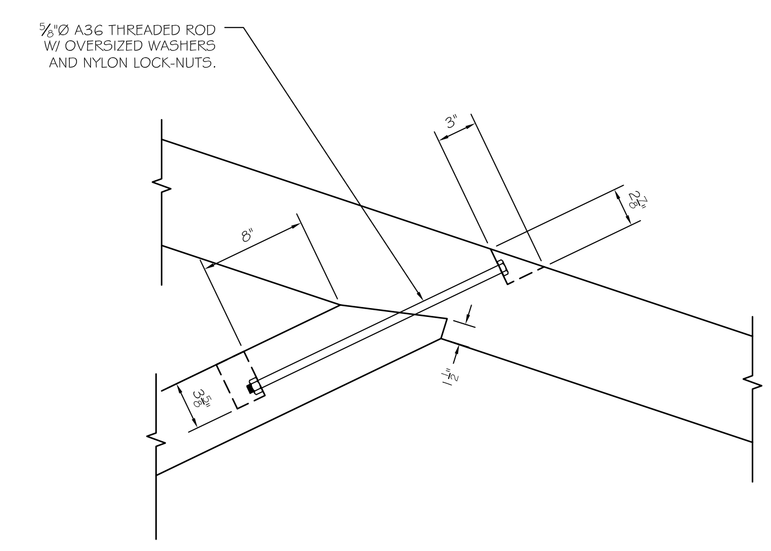

A1 DETAIL

SCALE: 1" = 1'-0"

B4

B3

A4

STATE OF MAINE ★ AARON S. WILSON ★ No. 11429 ★ LICENSED PROFESSIONAL ENGINEER

ASSOCIATED DESIGN PARTNERS INC.

80 Leighton Road
Falmouth, Maine 04105

Office: (207) 878-1751
Fax: (207) 878-1788
E-Mail: adp@adpengineering.com

THIS DRAWING, DESIGN AND ELECTRONIC FILE ARE THE PROPERTY OF ASSOCIATED DESIGN PARTNERS, INC. THE REPRODUCTION, COPYING OR ANY OTHER USE OF THIS DOCUMENT WITHOUT WRITTEN CONSENT IS PROHIBITED.

PROJECT: **ALLAGASH BREWING CO.**
PORTLAND, MAINE

SHEET TITLE: PATIO ROOF PROJECT
FRAMING DETAILS - ISSUED FOR PERMITTING

No.	BY	REVISIONS DESCRIPTION	DATE

DATE : 6-11-15
SCALE : AS NOTED
DESIGN BY: ASW
DRAWN BY: RSC

PROJECT NUMBER: 15192

SHEET NO: S3