| FOOTING SCHEDULE | | |
|---|---|---|
| MARK | SIZE | BOTTOM REINFORCING |
| F2.5 | 2'-6"x2'-6"x12" | (3) #5'S E.W. |
| F3 | 3'-0"x3'-0"x12" | (4) #5'S E.W. |
| F4 | 4'-0"x4'-0"x12" | (5) #5'S E.W. |
| F410 | 4'-0"x10'-0"x1'-6" | (7) #6'S L.W.<br>(20)#6'S S.W. |
| F5 | 5'-0"x5'-0"x12" | (6) #5'S E.W. |
| F6 | 6'-0x6'-0x1'-4" | (6) #6'S E.W. |
| F7 | 7'-0x7'-0x1'-4" | (10) #5'S E.W. |
| F78 | 7'-0x8'-0x1'-4" | (10) #5'S S.W.<br>(12) #5'S L.W. |
| F8 | 8'-0x8'-0x1'-4" | (12) #5'S E.W. |
| F9 | 9'-0x9'-0x1'-4" | (14) #5'S E.W. |

| PIER SCHEDULE | | |
|---|---|---|
| MARK | SIZE | REINFORCING |
| P1 | 12"x20" | SEE A3/S2 |
| P2 | 14"x14" | SEE B3/S2 |
| P3 | 16"x16" | SEE C3/S2 |
| P4 | 12"x18" | SEE A3/S2 SIM |

NOTES:
1. TOF INDICATES TOP OF FOOTING
2. TOC INDICATES TOP OF CONCRETE
3. TOP OF CONCRETE AND TOP OF FOOTING ELEVATIONS ARE REFERENCED FROM FINISHED FLOOR ELEVATION = (+83.5') = 0'-0"
4. —— UD —— INDICATES 4" SCHED. 40 PERFORATED PVC UNDERDRAIN (SHOWN SCHEMATICALLY) COORDINATE WITH SITE PLAN.
5. F.F. INDICATES FINISHED FLOOR
6. ADP, INC. RECOMMENDS CLEANOUTS AT EVERY OTHER CORNER OF FOUNDATION UNDERDRAIN.
7. SEE S2 FOR GENERAL NOTES & SPECIFICATIONS
8. FOOTINGS ARE CENTERED ON COLUMN GRIDS, UNO.
9. SEE DETAIL SHEETS FOR PIER REINFORCING.
10. G.C. VERIFY REQUIRED WIDTH OF ALL FOUNDATION WALL BOND-OUTS FOR DOOR OPENINGS PRIOR TO CONSTRUCTION.
11. PROVIDE (2) ½"Ø X307 ANCHOR BOLTS EA. SIDE OF FRAMED OPENINGS THROUGH EXTERIOR BUILDING WALLS. SEE DETAIL B2/S5 AND B4/S3.
12. REMOVE EXG. SIDEWALK AND SEGMENTAL BLOCK RETAINING WALL WITHIN NEW BUILDING FOOTPRINT.
13. CONTRACTOR VERIFY ALL DIMENSIONS NOTED (+/-).
14. INSTALL KAGETECH FLOORING THROUGHOUT NEW BREWERY PRODUCTION AREA (COL LINES 1 TO 7.8). SLAB FLATNESS (VERTICAL DISTANCE BETWEEN HIGH/LOW POINTS) TOLERANCE NO MORE THAN ⅛" IN 10 LINEAL FEET, COORDINATE WITH TILE MANUFACTURER (KAGETECH) REQUIREMENTS.

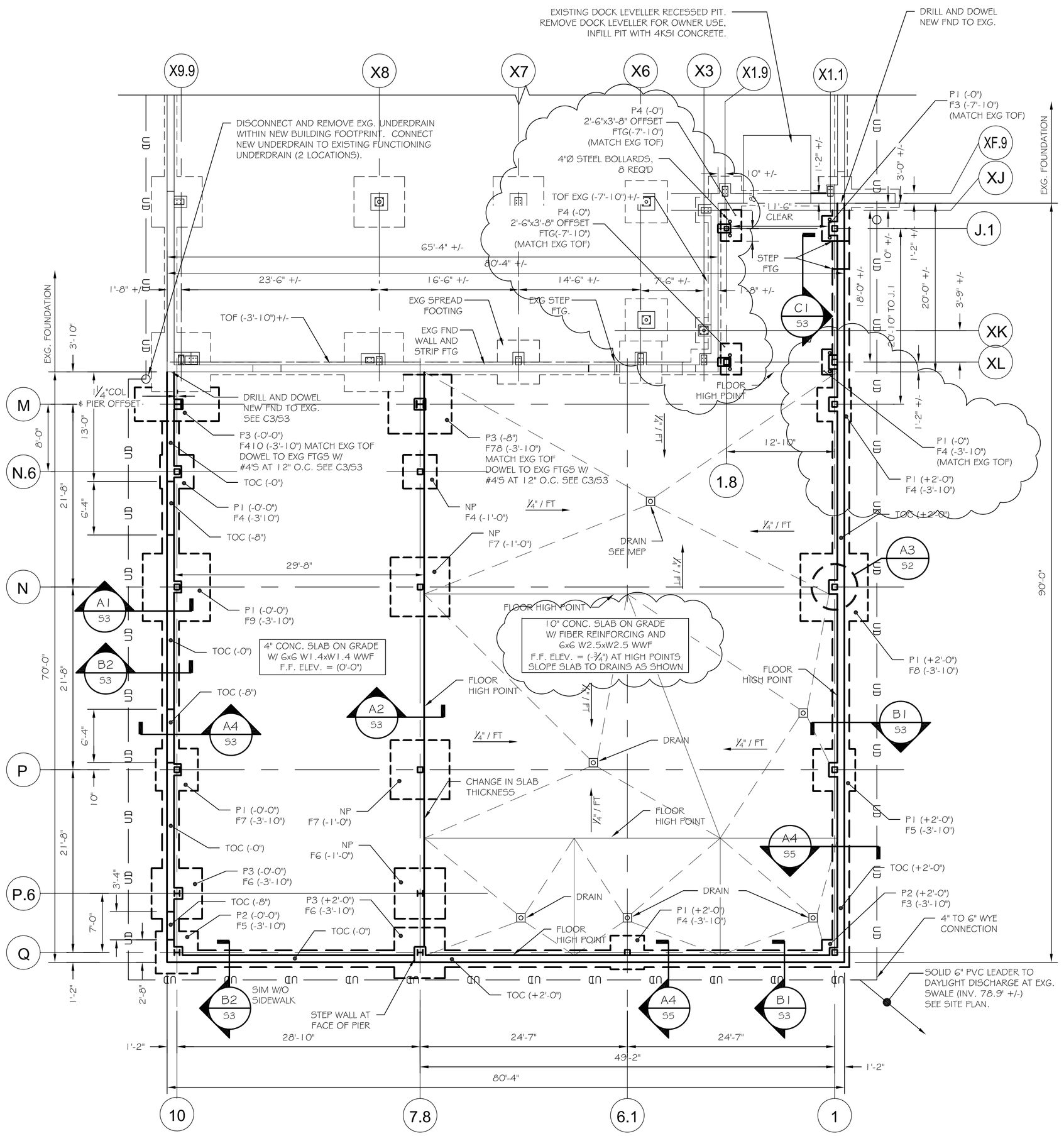


A2 FOUNDATION PLAN
SCALE: 1/8" = 1'-0"

| W-BEAM CONNECTION SCHEDULE | | | | |
|---|---|---|---|---|
| W-BEAM | ¾"Ø A325N BOLTS | LENGTH OF ⅜" PL | ALLOWABLE REACTION w/ ¼" FILLET-WELD | |
| W24 | n=7 | L=21 | $P_r$ =56.4k | |
| W21 | n=6 | L=18 | P =46.3k | |
| W18 | n=5 | L=15 | $P_r$ =36.3k | |
| W16 | n=4 | L=12 | P =26.1k | |
| W14, W12 | n=3 | L=9 | $P_r$ =16.3k | |
| W10, W8 | n=2 | L=6 | $P_r$ =8.2k | |

SINGLE PL SHEAR CONN. IN ACCORDANCE w/ AISC 9th ED. TABLE X

FRAMING NOTES:
1. SEE S2 FOR GENERAL DESIGN NOTES.
2. ⟷ INDICATES SPAN DIRECTION OF 1½"-22GA TYPE B PAINTED ROOF DECK. ⅝"Ø PUDDLE WELDS IN 36/4 PATTERN, (1) #10 TEK SIDELAP SCREW PER SPAN.
3. TOS (+X'-Y") INDICATES TOP OF BEARING STEEL REFERENCED FROM FIN. FIRST FLOOR ELEVATION 0'-0" = (83.5'). TOP OF BEARING STEEL DESIGNATED AT COLUMN CENTERLINE TYPICAL, UNLESS NOTED OTHERWISE (UNO). CONTRACTOR VERIFY TOS AT LINES J.1 AND M TO MATCH EXISTING ROOF HEIGHT AND SLOPE.
4. (*) INDICATES BEAM INSTALLED AT OPEN WEB JOIST HEIGHT.
5. SEE DWG S2 FOR MEZZANINE FRAMING.
6. EDGE OF DECK TO BE EXTERIOR EDGE OF PERIMTER BEAM FLANGE, TYP UNO.
7. ▶ INDICATES BEAM TO COLUMN MOMENT CONNECTION. SEE DET. B4/S4.
8. ALL ANGLES AT HVAC / ROOF PENETRATIONS TO BE L4x4x¼. CONTRACTOR VERIFY CLEARANCES FOR SHOP FABRICATED FRAMES WITH ACTUAL HVAC UNIT/EQUIPMENT PURCHASED PRIOR TO FABRICATION. ALL ANGLES AT ROOF PENETRATIONS/HVAC UNITS TO BE SHIPPED LOOSE AND FIELD INSTALLED AFTER HVAC FRAMES ARE ONSITE. ALL ANGLES AT HVAC FRAMES / PIPE STACKS TO BE ORIENTED WITH HORIZONTAL LEGS FACING AWAY FROM ADJACENT DUCT OPENINGS.
9. "UNO" INDICATES "UNLESS NOTED OTHERWISE"
10. ALL WOOD IN CONTACT WITH CONCRETE TO BE PRESSURE TREATED.
11. ALL FASTENERS IN PT LUMBER TO BE HOT DIPPED G90 GALVANIZED.
12. CONTRACTOR VERIFY ALL DIMENSIONS NOTED (+/-).
13. SEE S4 FOR BRACE FRAME ELEVATIONS
14. ALL STRUCTURAL STEEL TO BE PRIMED (GREY) AND PREPPED FOR PAINT. SEE SPECS FOR PAINTING REQUIREMENTS.

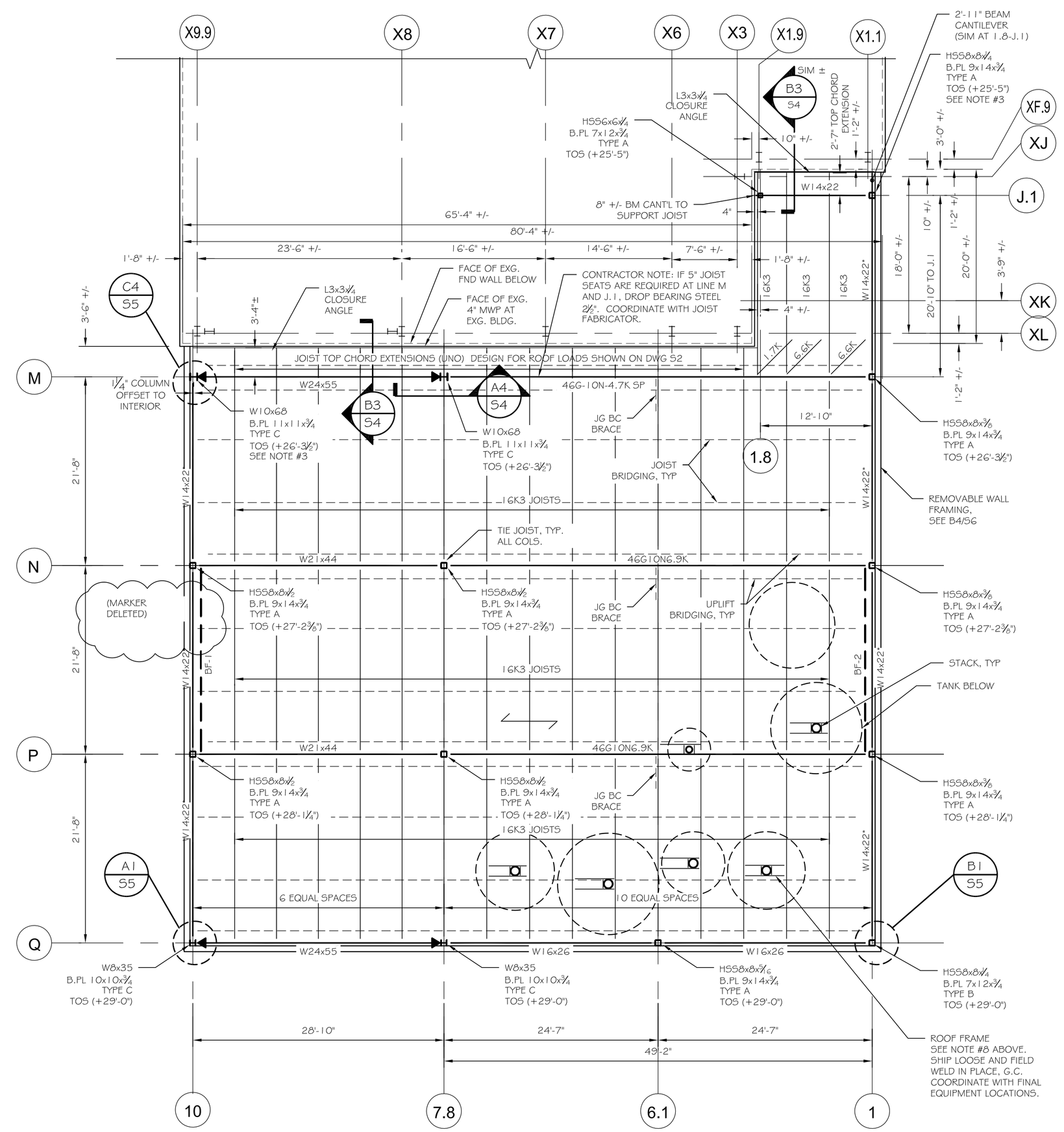


A1 ROOF FRAMING PLAN
1/8" = 1'-0"


STATE OF MAINE AARON S. WILSON No. 10429 LICENSED PROFESSIONAL ENGINEER

ASSOCIATED DESIGN PARTNERS INC.
80 Leighton Road
Falmouth, Maine 04105
Office: (207) 878-1751
Fax: (207) 878-1788
E-Mail: adp@adpengineering.com



THIS DRAWING, DESIGN AND ELECTRONIC FILE ARE THE PROPERTY OF ASSOCIATED DESIGN PARTNERS, INC. THE REPRODUCTION, COPYING OR ANY OTHER USE OF THIS DOCUMENT WITHOUT WRITTEN CONSENT IS PROHIBITED.


PROJECT: ALLAGASH BREWHOUSE ADDITION
INDUSTRIAL WAY, PORTLAND, MAINE
FOR: ALLAGASH BREWING CO.

SHEET TITLE: FOUNDATION AND ROOF FRAMING PLANS ISSUED FOR PERMITTING

| REVISIONS | | | |
|---|---|---|---|
| No. | BY | DESCRIPTION | DATE |
| 1 | ASW | ADDENDUM #1 | 9/25/12 |
| 2 | | | |
| 3 | | | |
| 4 | | | |

DATE : 9-17-12
SCALE : 1/8"=1'-0"
DESIGN BY: ASW
DRAWN BY: RSC
FILE #: 12160-S1
PROJECT NUMBER: 12160
SHEET NO: S1

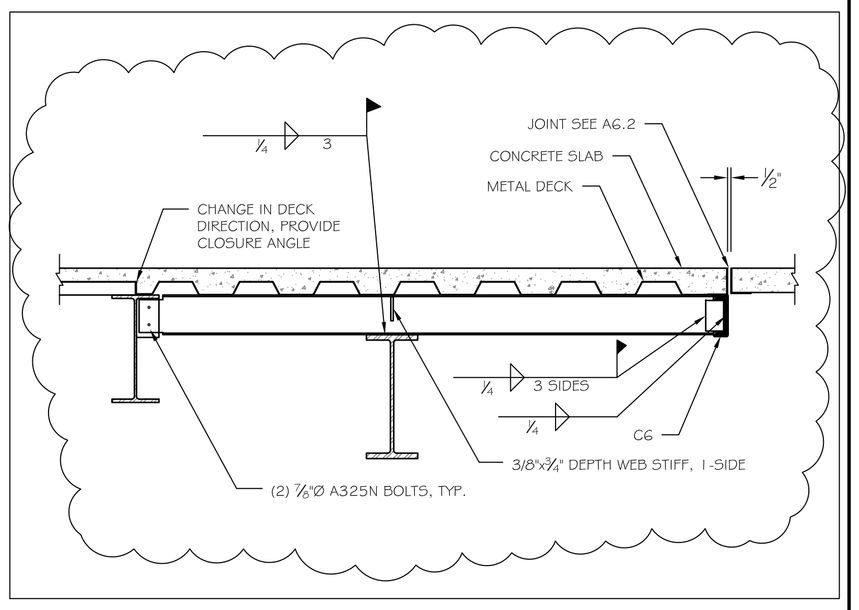


C4 DETAIL AT NEW FLOOR TO EXISTING.

SCALE: 3/4" = 1'-0"

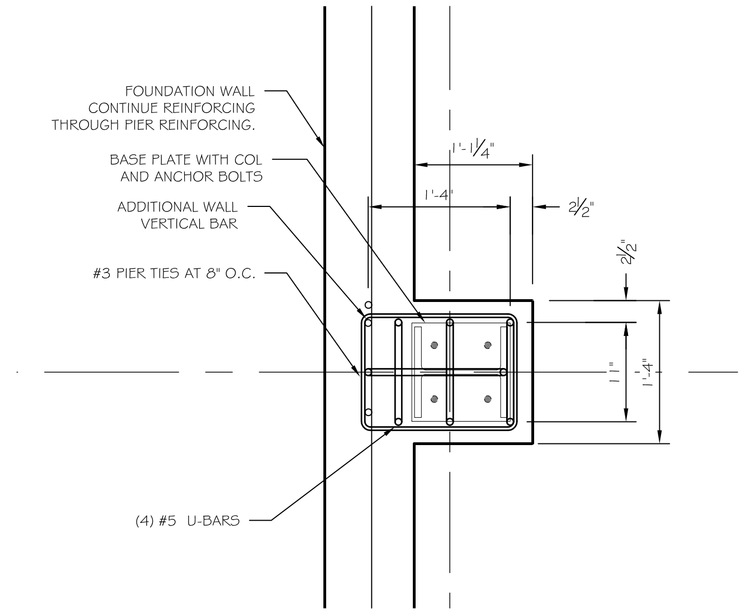


C3 PIER P3

SCALE: 1" = 1'-0"

## GENERAL STRUCTURAL NOTES

1. ALL WORK SHALL CONFORM TO THE REQUIREMENTS OF ALL APPLICABLE STATE AND LOCAL CODES, INCLUDING BUT NOT LIMITED TO:
   - -IBC BUILDING CODE 2009 ED
   - -ANSI-ASCE 7-05
   - -ACI 318-05 "BUILDING CODE REQUIREMENTS FOR REINFORCED CONCRETE"
   - -ACI 301 "SPECIFICATIONS FOR STRUCTURAL CONCRETE FOR BUILDINGS"
   - -AISC STEEL CONSTRUCTION MANUAL 9TH ED ASD
   - -AISI COLD FORMED STEEL DESIGN MANUAL, 2001
   - -ANSI-AF&PA NDS-2005
2. DESIGN LOADS
   - 2.1. GRAVITY ROOF DESIGN LOADS:
     - FLAT ROOF SNOW LOAD — 42 PSF BALANCED DRIFT PER ASCE 7-05
     - ROOF DEAD LOAD — 22 PSF
     - MEZZ LIVE LOAD — 250 PSF
     - MEZZ DEAD LOAD — 75 PSF
   - 2.2. LATERAL - WIND: V=98MPH, EXP B, I=1.0, Kd=0.85, Kz=0.71, Kzt=1.0, Qh=15.0 PSF. Pv=-13.3PSF WORST CASE 2E COMPONENTS AND CLADDING PRESSURES BASED ON ASCE 7-05 AND TRIBUTARY COMPONENT AREA.
   - 2.3. LATERAL - SEISMIC: Ss=0.31, S1=0.078, SITE=D, Fa=1.52, Fv=2.4, Sds=0.314, Sd1=0.125, I=1.0, SDC=B.
     - R= 3.25 OCBF V=18.8K (BREWHOUSE ADDITION)
     - R= 3.5 OMF V=17.5K (BREWHOUSE ADDITION)
     - R=3 ORCMF V=40K (FERMENTATION TANK STRUCTURE)
   - 2.4. FERMENTATION TANK STRUCTURE
     - TANK DL (EMPTY) = 10K
     - TANK FLUID WT (OVERFILL CONDITION) = 90K
3. CONTRACTOR SHALL BRING TO THE ATTENTION OF THE ENGINEER ANY CONDITIONS DIFFERENT FROM THOSE SHOWN ON THE DRAWINGS AND ALSO ANY CONDITIONS THAT PREVENT THE CONTRACTOR'S COMPLETION OF THE WORK AS SHOWN ON THE CONSTRUCTION DRAWINGS.
4. ALL WORK SHALL BE PERFORMED BY PERSONS QUALIFIED IN THEIR TRADE AND LICENSED TO PRACTICE SUCH TRADE IN THE STATE IN WHICH THE PROJECT IS LOCATED.
5. THESE DRAWINGS SHALL BE USED IN CONJUNCTION WITH ANY ARCHITECTURAL, MECHANICAL, AND ELECTRICAL DRAWINGS, IN ADDITION TO SPECIFICATIONS AND ANY SHOP DRAWINGS PROVIDED BY SUBCONTRACTORS AND SUPPLIERS.
6. ALL DIMENSIONS, ELEVATIONS, AND CONDITIONS SHALL BE VERIFIED IN THE FIELD BY GENERAL CONTRACTOR (G.C.) AND ANY DISCREPANCIES SHALL BE BROUGHT TO THE ATTENTION OF THE ENGINEER FOR CLARIFICATION BEFORE PROCEEDING WITH THE AFFECTED PART OF THE WORK.
7. UNLESS OTHERWISE NOTED, DETAILS, SECTIONS, AND NOTES SHOWN ON ANY DRAWING SHALL BE CONSIDERED TYPICAL FOR ALL SIMILAR DETAILS.
8. THESE DRAWINGS DO NOT SHOW SIZE, LOCATION OR TYPE OF OPENING IN THE FOUNDATION SYSTEM FOR ELECTRICAL, PLUMBING OR MECHANICAL EQUIPMENT. THE GENERAL CONTRACTOR SHALL BE RESPONSIBLE FOR LOCATING THESE ITEMS.
9. ALL SHOP DRAWINGS PROVIDED BY OTHERS SHALL BE SUBMITTED TO THE ENGINEER FOR REVIEW PRIOR TO FABRICATION OF MATERIAL OR THE PURCHASE OF NON-RETURNABLE STOCK. DIMENSIONAL REVIEW IS THE CONTRACTOR'S RESPONSIBILITY.
10. FIRE SUPPRESSION SYSTEM TO BE EXTENDED FROM EXISTING FERMENTATION TANK STRUCTURE INTO NEW FERMENTATION TANK STRUCTURE. SEE MECHANICAL SPECIFICATIONS FOR DESIGN BUILD REQUIEMENTS.

A4 NOTES

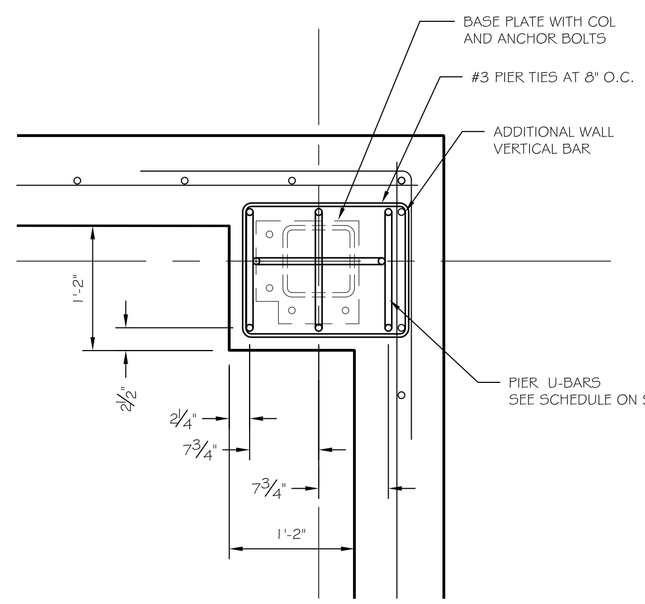


B3 PIER P2

SCALE: 1" = 1'-0"

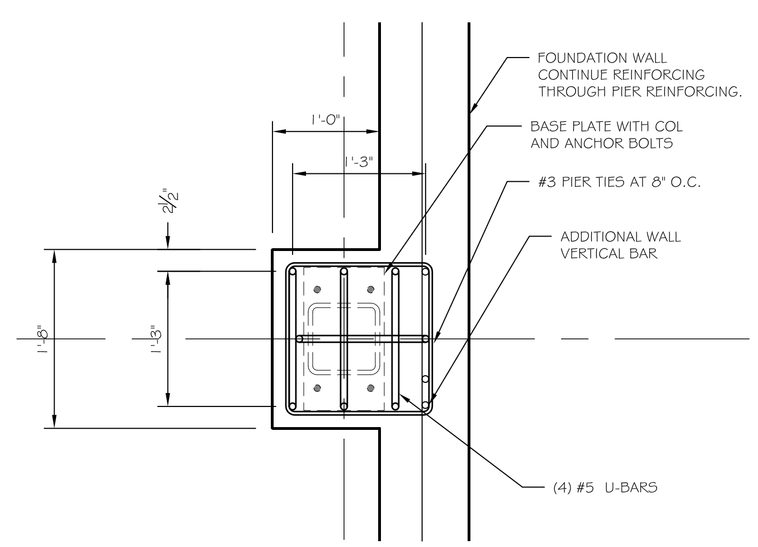


A3 PIER P1

SCALE: 1" = 1'-0"

| W-BEAM CONNECTION SCHEDULE | | | | |
|---|---|---|---|---|
| W-BEAM | 7/8"Ø A325N BOLTS | LENGTH OF 3/8" PL | ALLOWABLE REACTION w/ 1/4" FILLET-WELD | |
| W24 | n=7 | L=21 | P =56.4k | |
| W21 | n=6 | L=18 | P =46.3k | |
| W18 | n=5 | L=15 | $P_u$ =36.3k | |
| W16 | n=4 | L=12 | P =26.1k | |
| W14, W12 | n=3 | L=9 | $P_u$ =16.3k | |
| W10, W8 | n=2 | L=6 | $P_u$ =8.2k | |

SINGLE PL SHEAR CONN. IN ACCORDANCE w/ AISC 9th ED. TABLE X

FRAMING NOTES:

1. INDICATES SPAN DIRECTION OF 1 1/2" -20GA VLI COMPOSITE FLOOR DECK FOR 5" CONCRETE SLAB (TOTAL SLAB DEPTH = 5"). HILTI X-ENP-19 PINS IN 36/4 PATTERN, (3) #10 TEK SIDELAP SCREW PER SPAN. SLAB REINFORCING TO BE 6X6 W1.4xW1.4 WWF. FINISHED TOP OF SLAB (+12'-6" VIF - MATCH EXISTING). PRIME AND PAINT UNDERSIDE OF DECK.
2. MEZZ TOS (+12'-1") INDICATES TOP OF BEARING STEEL REFERENCED FROM FIN. FIRST FLOOR ELEVATION 0'-0" = (63.5'). TOP OF BEARING STEEL DESIGNATED AT COLUMN CENTERLINE TYPICAL, UNLESS NOTED OTHERWISE (UNO). CONTRACTOR VERIFY T/SLAB AT EXISTING MEZZANINE - T/SLAB AT NEW MEZZANINE IS TO MATCH EXISTING. NOTIFY ENGINEER AND ADJUST TOP OF MEZZANINE STEEL IF NECESSARY.
3. EDGE OF DECK TO BE EXTERIOR EDGE OF PERIMTER BEAM FLANGE, TYP UNO.
4. ▶ INDICATES BEAM TO COLUMN MOMENT CONNECTION, SEE DET. B4/S4.
5. "UNO" INDICATES "UNLESS NOTED OTHERWISE"
6. ALL WOOD IN CONTACT WITH CONCRETE TO BE PRESSURE TREATED.
7. ALL FASTENERS IN PT LUMBER TO BE HOT DIPPED G90 GALVANIZED.
8. ALL STRUCTURAL STEEL TO BE PRIMED (GREY) AND PREPPED FOR PAINT. SEE SPECS FOR PAINTING REQUIREMENTS.

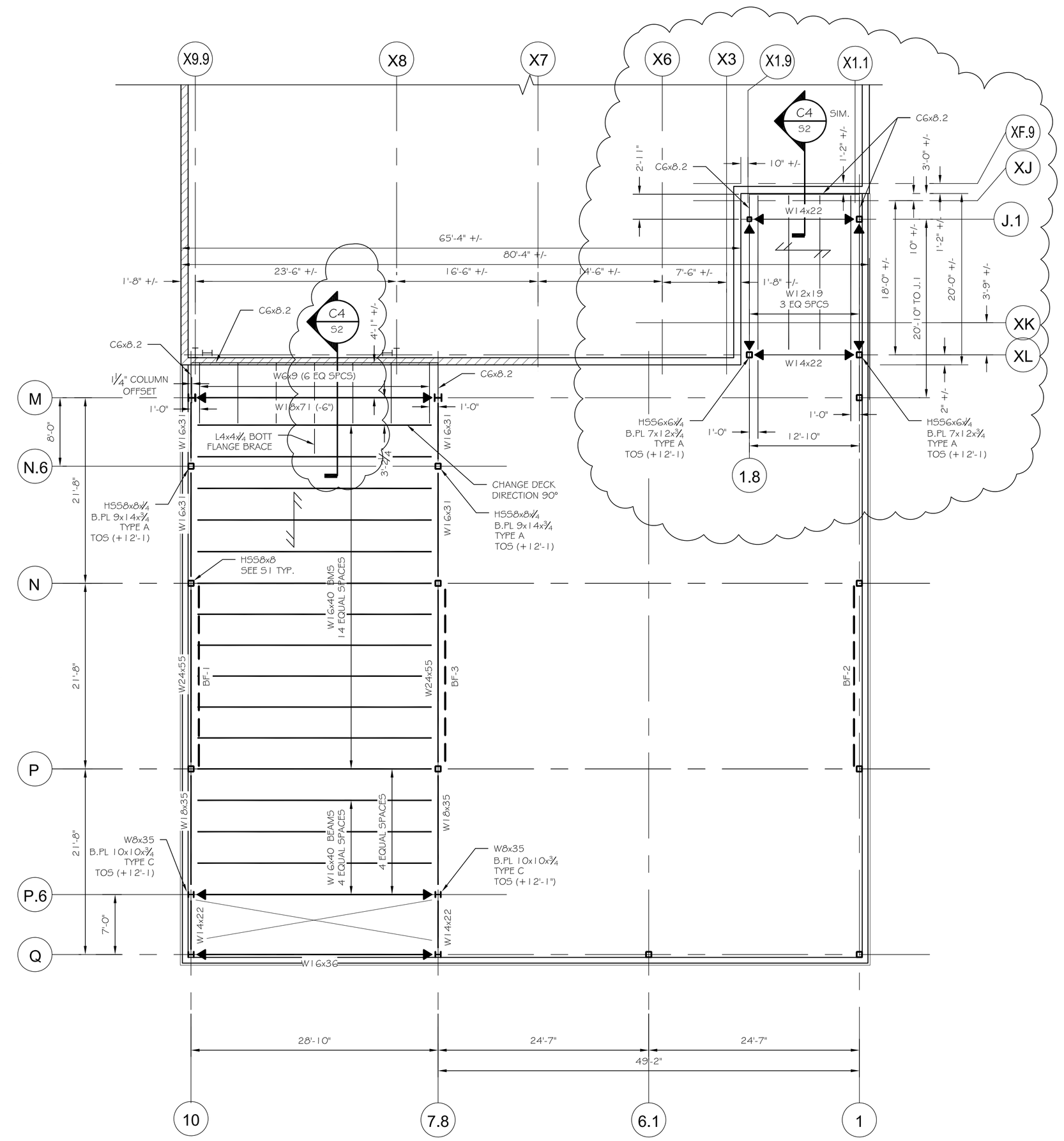


A1 MEZZANINE FRAMING PLAN

SCALE: 1/8" = 1'-0"


STATE OF MAINE AARON S. WILSON No. 10429 LICENSED PROFESSIONAL ENGINEER

ASSOCIATED DESIGN PARTNERS INC.
80 Leighton Road
Falmouth, Maine 04105
Office: (207) 878-1751
Fax: (207) 878-1788
E-Mail: adp@adpengineering.com



THIS DRAWING, DESIGN AND ELECTRONIC FILE ARE THE PROPERTY OF ASSOCIATED DESIGN PARTNERS, INC. THE REPRODUCTION, COPYING OR ANY OTHER USE OF THIS DOCUMENT WITHOUT WRITTEN CONSENT IS PROHIBITED.


PROJECT: ALLAGASH BREWHOUSE ADDITION
INDUSTRIAL WAY, PORTLAND, MAINE
FOR: ALLAGASH BREWING CO.

SHEET TITLE: MEZZANINE AND CANOPY FRAMING PLANS
ISSUED FOR PERMITTING

| REVISIONS | | | |
|---|---|---|---|
| No. | BY | DESCRIPTION | DATE |
| 1 | ASW | ADDENDUM #1 | 9/25/12 |
| 2 | | | |
| 3 | | | |
| 4 | | | |

DATE : 9-17-12
SCALE : AS NOTED
DESIGN BY: ASW
DRAWN BY: RSC
FILE #: 12160-S1
PROJECT NUMBER: 12160
SHEET NO: S2

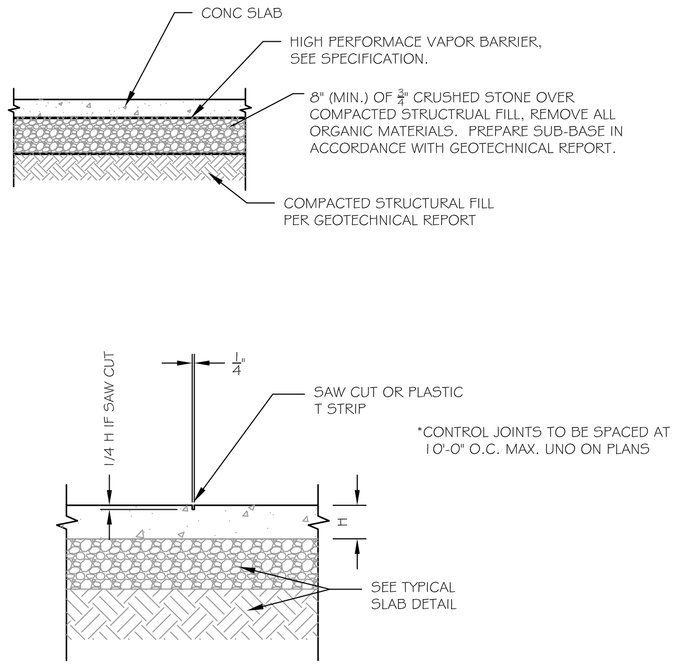


C4 TYPICAL SLAB DETAILS

SCALE: NO SCALE

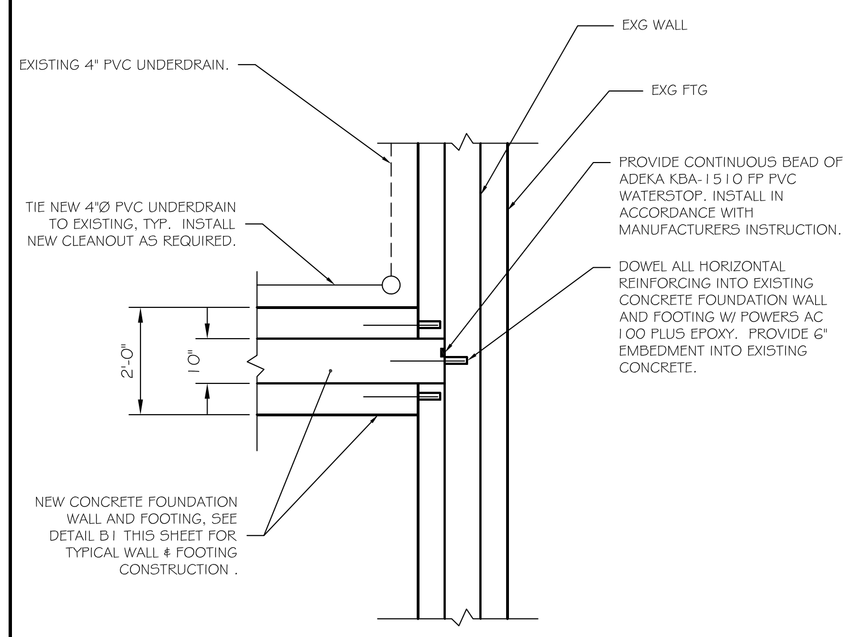


C3 NEW FOUNDATION TO EXG. CONNECTION

SCALE: 1/2"=1'-0"

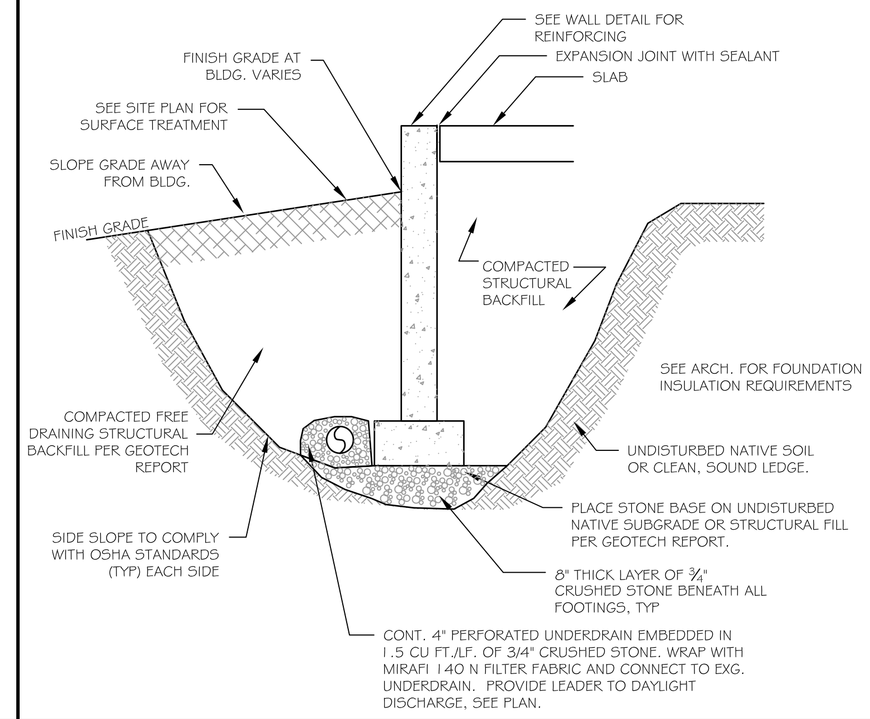


C2 TYPICAL EARTHWORK DETAIL

SCALE: NO SCALE

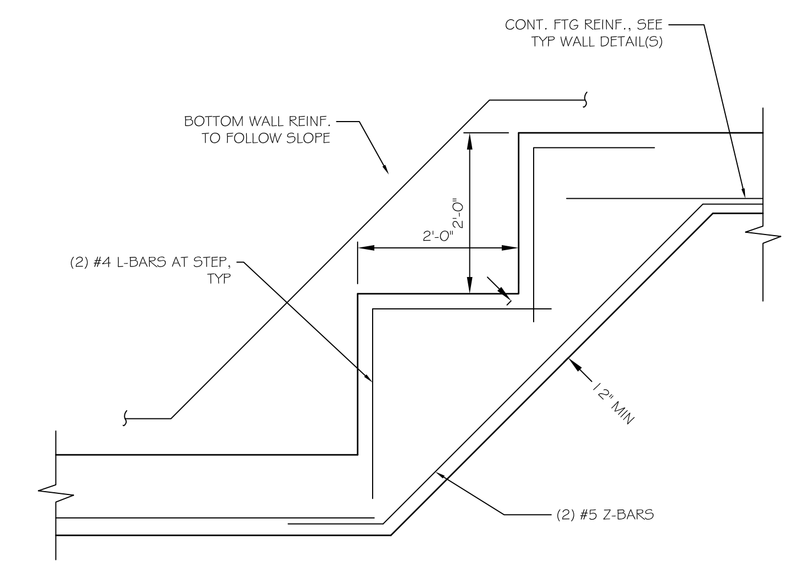


C1 FOOTING STEP DETAIL

SCALE: NO SCALE

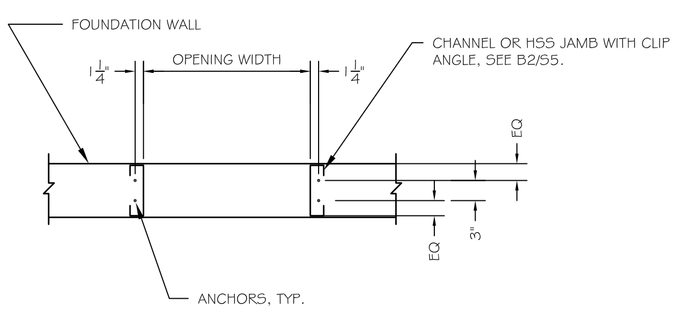


B4 ANCHORS AT FRAMED OPENINGS

SCALE: NO SCALE

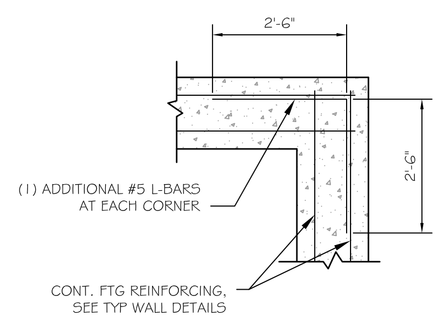


B3 CORNER REINFORCING IN FOOTING

SCALE: 1"=1'-0"

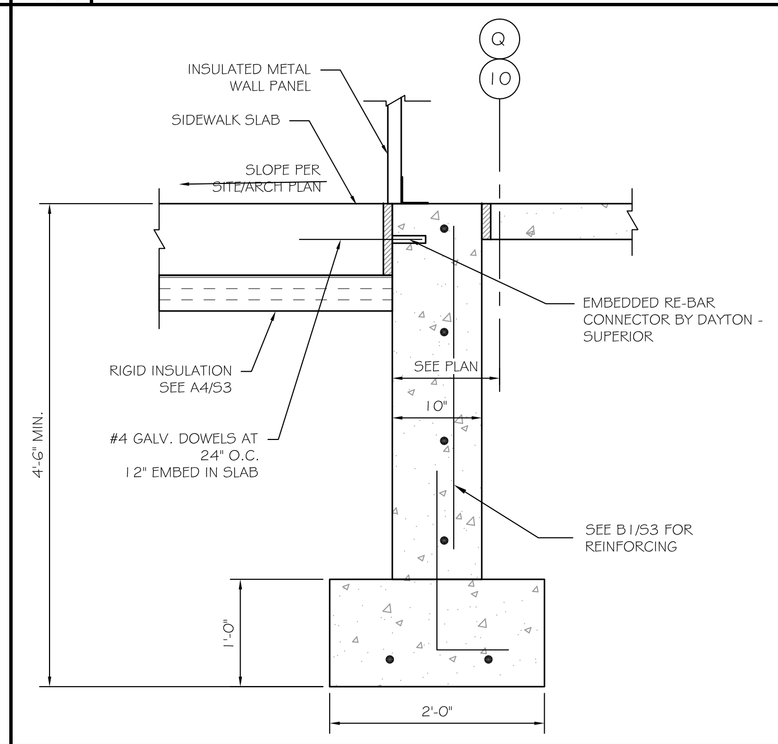


B2 FOUNDATION DETAIL

SCALE: 1"=1'-0"

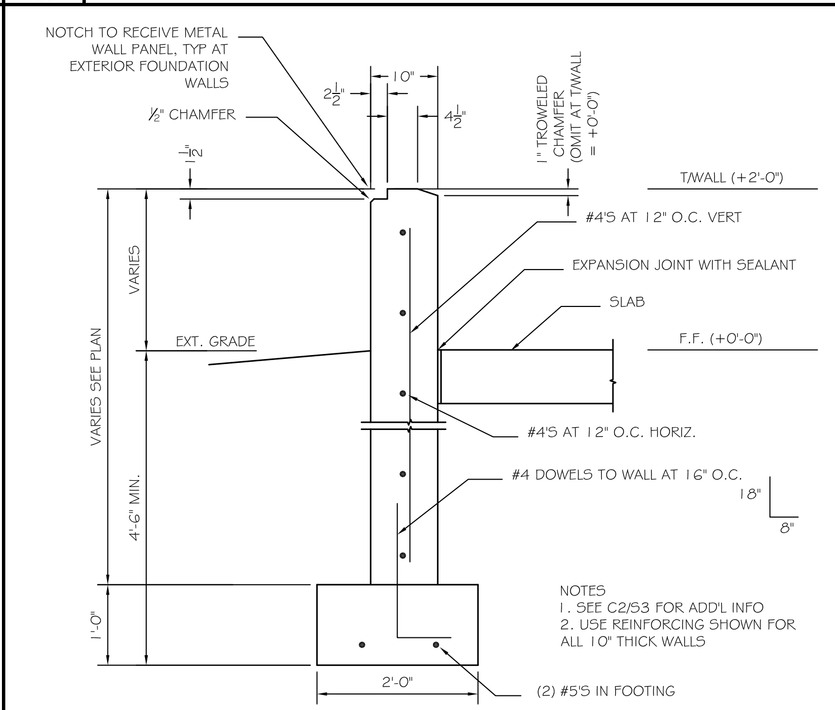


B1 10" FOUNDATION WALL AT T/WALL +2'-0"

SCALE: ¾" = 1'-0"

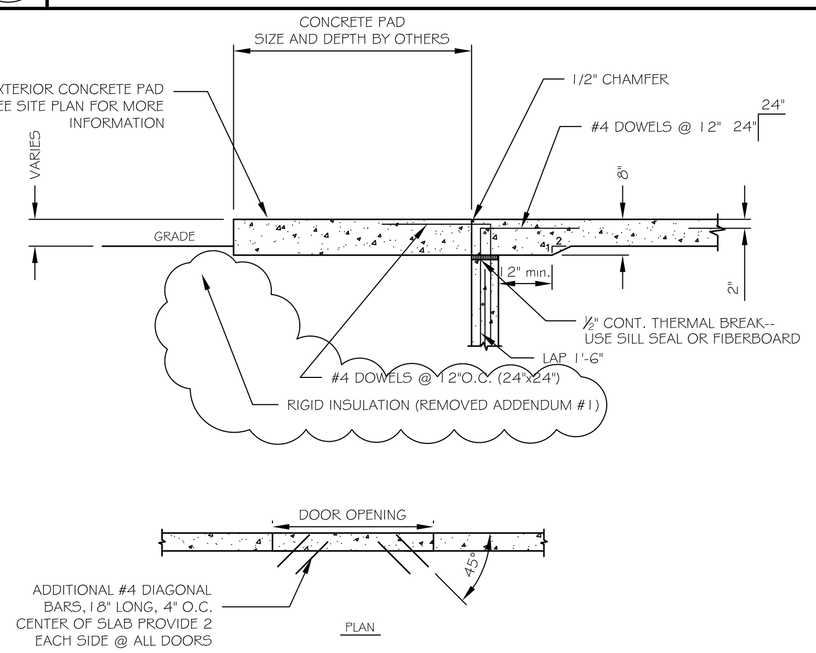


A4 SLAB AT EXTERIOR DOORS

SCALE: NO SCALE

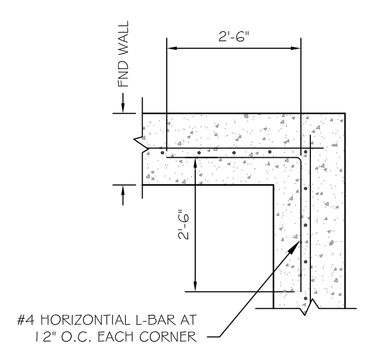


A3 CORNER REINFORCING IN FOUNDATION WALL

SCALE: NO SCALE

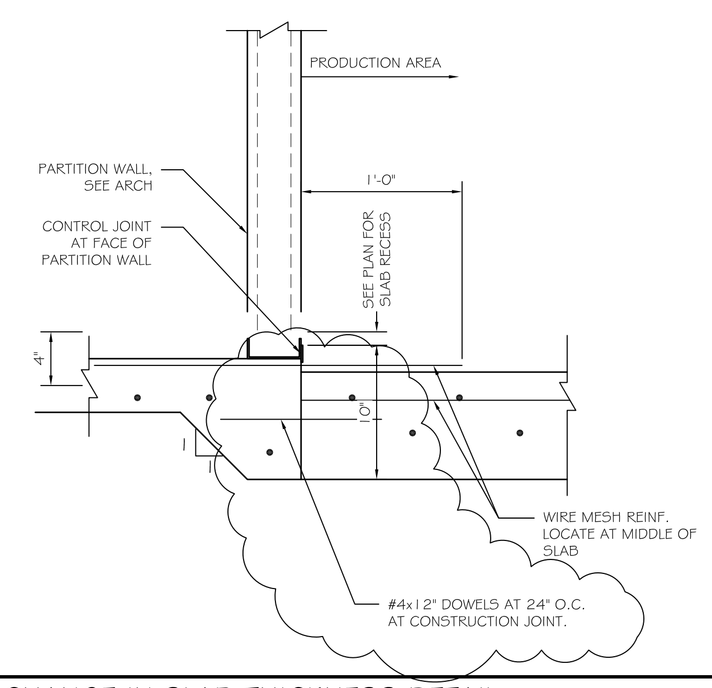


A2 CHANGE IN SLAB THICKNESS DETAIL

SCALE: 1½"=1'-0"

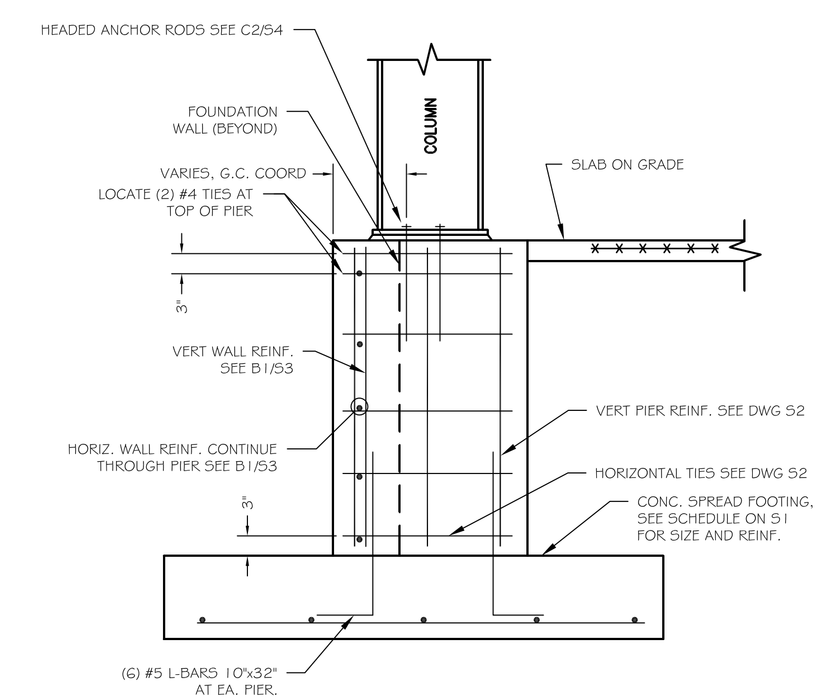


A1 TYP. PIER / FOOTING SECTION AT EXTERIOR WALL

SCALE: NO SCALE

STATE OF MAINE AARON S. WILSON No. 13429 LICENSED PROFESSIONAL ENGINEER

ASSOCIATED DESIGN PARTNERS INC.
80 Leighton Road
Falmouth, Maine 04105
Office: (207) 878-1751
Fax: (207) 878-1788
E-Mail: adp@adpengineering.com

THIS DRAWING, DESIGN AND ELECTRONIC FILE ARE THE PROPERTY OF ASSOCIATED DESIGN PARTNERS, INC. THE REPRODUCTION, COPYING OR ANY OTHER USE OF THIS DOCUMENT WITHOUT WRITTEN CONSENT IS PROHIBITED.

PROJECT: ALLAGASH BREWHOUSE ADDITION
INDUSTRIAL WAY, PORTLAND, MAINE
FOR: ALLAGASH BREWING CO.

SHEET TITLE: FOUNDATION DETAILS
ISSUED FOR PERMITTING

REVISIONS

| No. | BY | DESCRIPTION | DATE |
|---|---|---|---|
| 1 | ASW | ADDENDUM #1 | 9/25/12 |
| 2 | | | |
| 3 | | | |
| 4 | | | |

DATE : 9-17-12
SCALE : 1/8"=1'-0"
DESIGN BY: ASW
DRAWN BY: RSC
FILE #: 12160-S1
PROJECT NUMBER: 12160
SHEET NO: S3

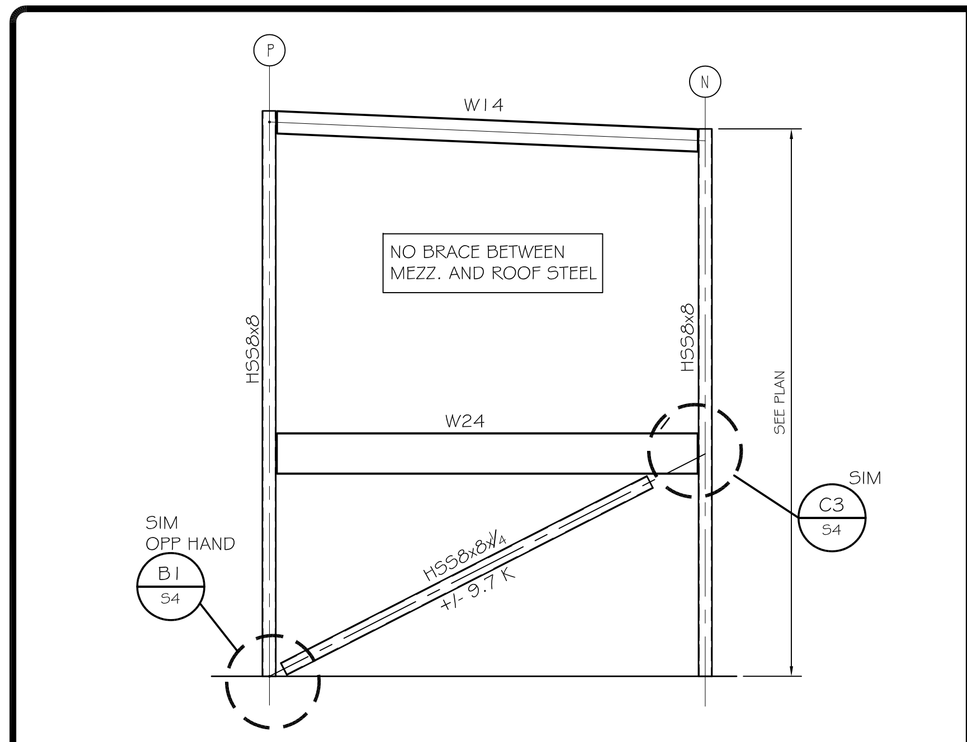


C4 BRACE FR-3 LINE 7.8

SCALE: 3/16" = 1'-0"

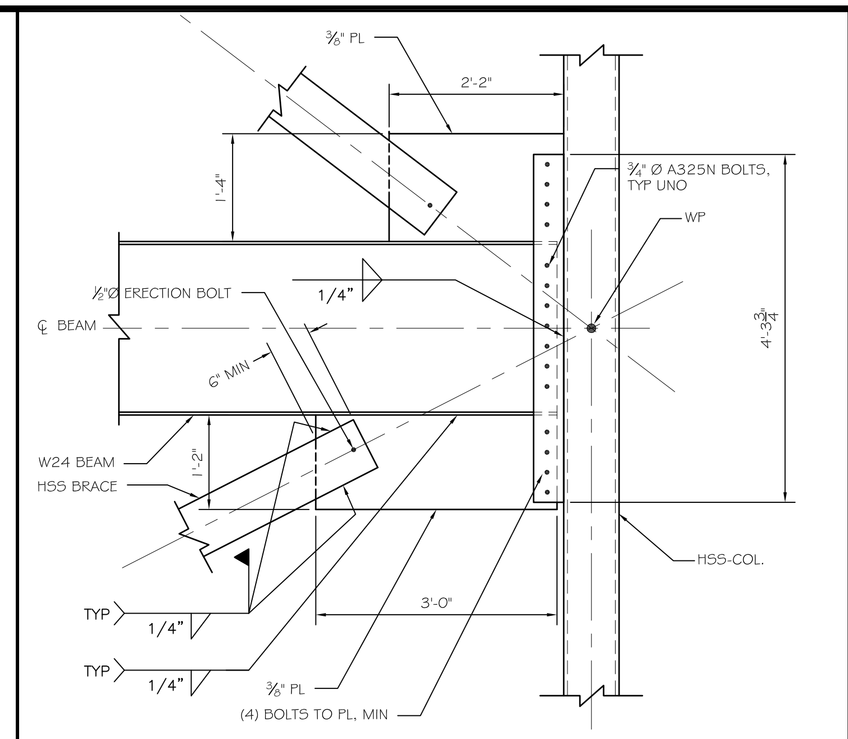


C3 BRACE DETAIL

SCALE: 3/4" = 1'-0"

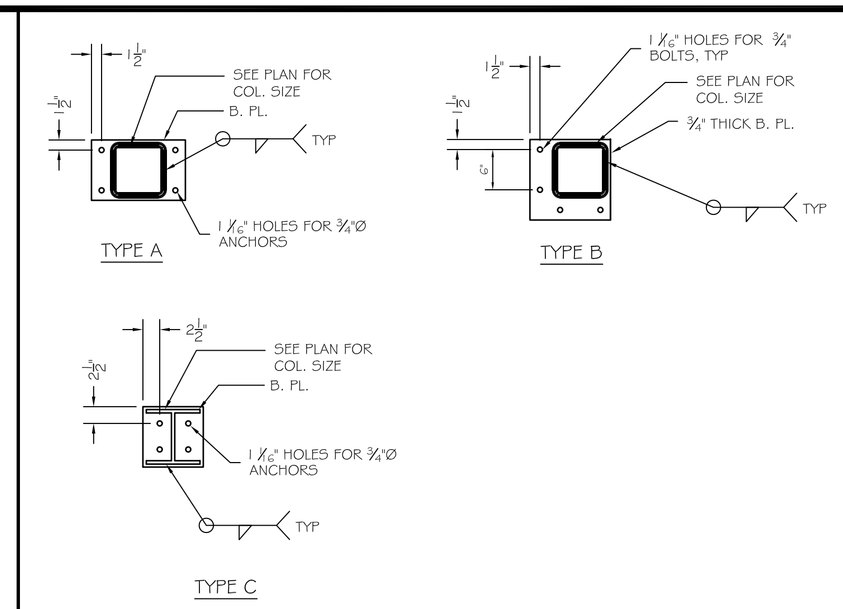


NOTES:
1. ALL ANCHOR RODS AT COLUMNS P-1, N-1, P-7.8, N-7.8, P-10, N-10M P.6-10, P.6-7.8 TO BE 3/4"x18" EMBED A36 HEADED ANCHORS, TYP UNO
2. ALL OTHER ANCHOR RODS TO BE 3/4"x9" EMBED A36 HEADED ANCHORS, TYP UNO
3. ALL COLUMNS TO BEAR ON 3/4" NON-SHRINK GROUT AND 1/4" LEVELLING PLATE

C2 BASE PLATE DETAILS

SCALE: 3/4" = 1'-0"

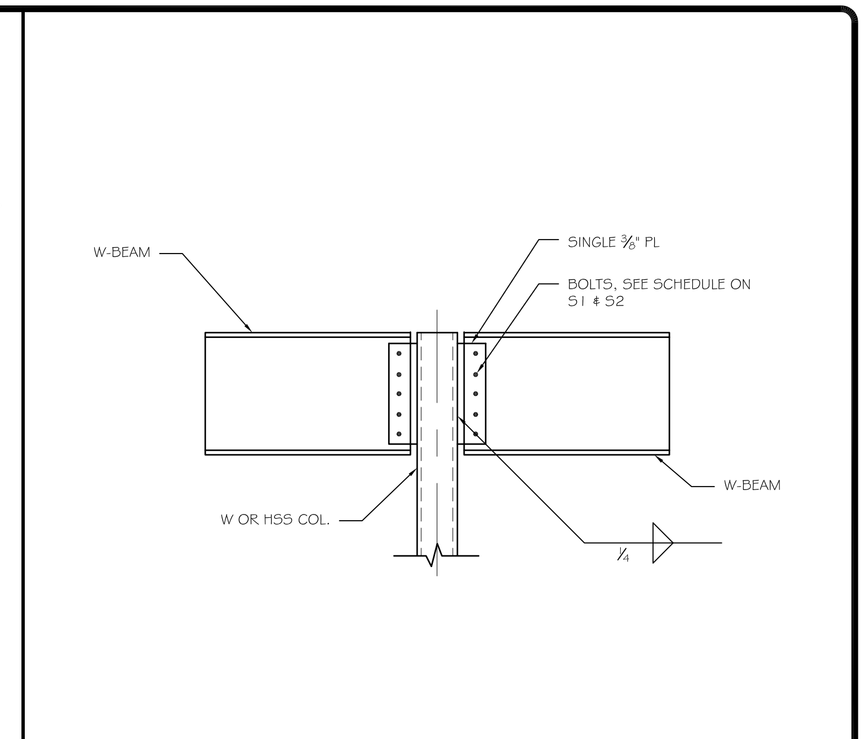


C1 BEAM CONNECTION

SCALE: 3/4" = 1'-0"

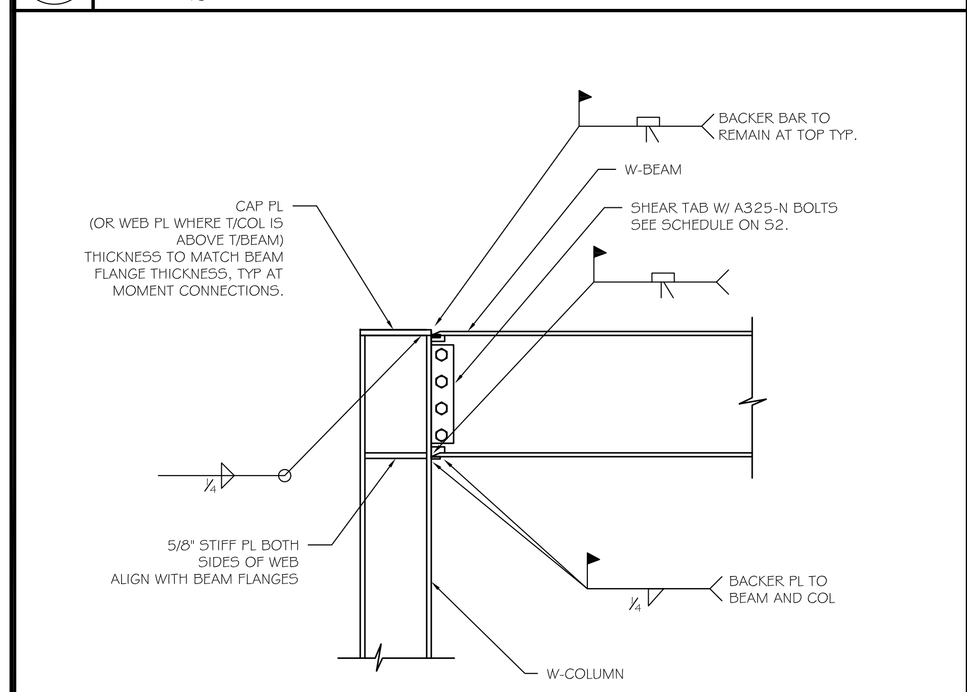


B4 MOMENT CONNECTION

SCALE: 1"= 1'-0"

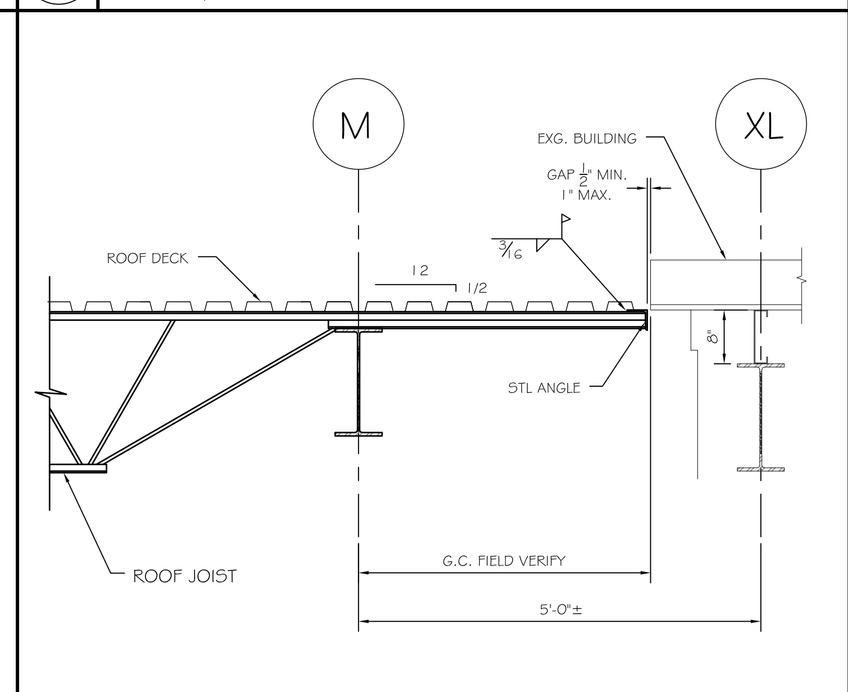


B3 DETAIL

SCALE: 3/4" = 1'-0"

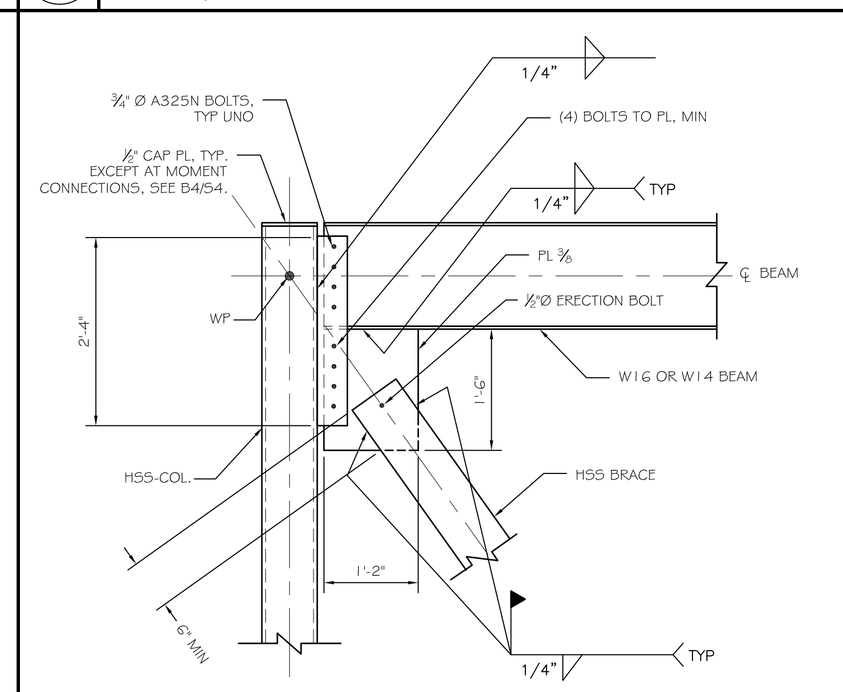


B2 BRACE FRAME CONNECTION

SCALE: 3/4" = 1'-0"

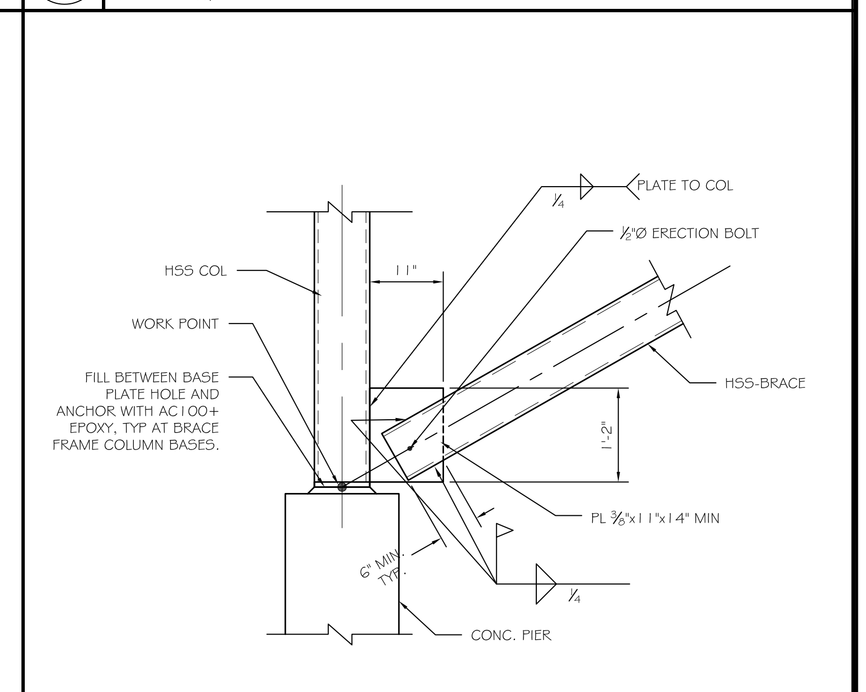


B1 BRACE FRAME CONNECTION

SCALE: 3/4" = 1'-0"

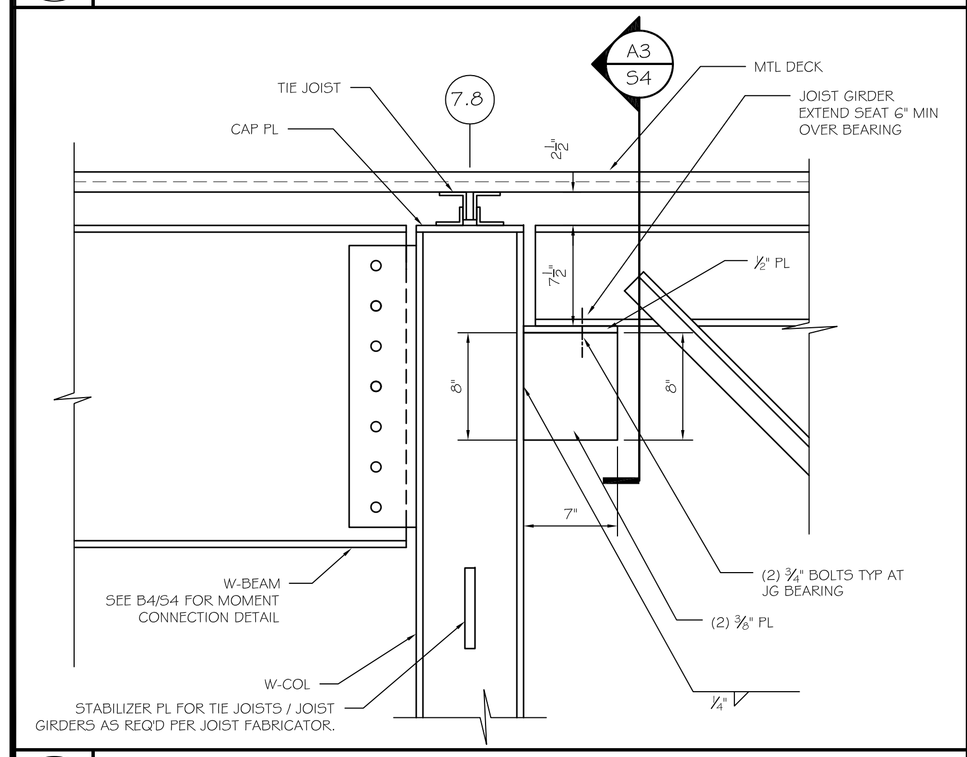


A4 DETAIL

SCALE: NTS

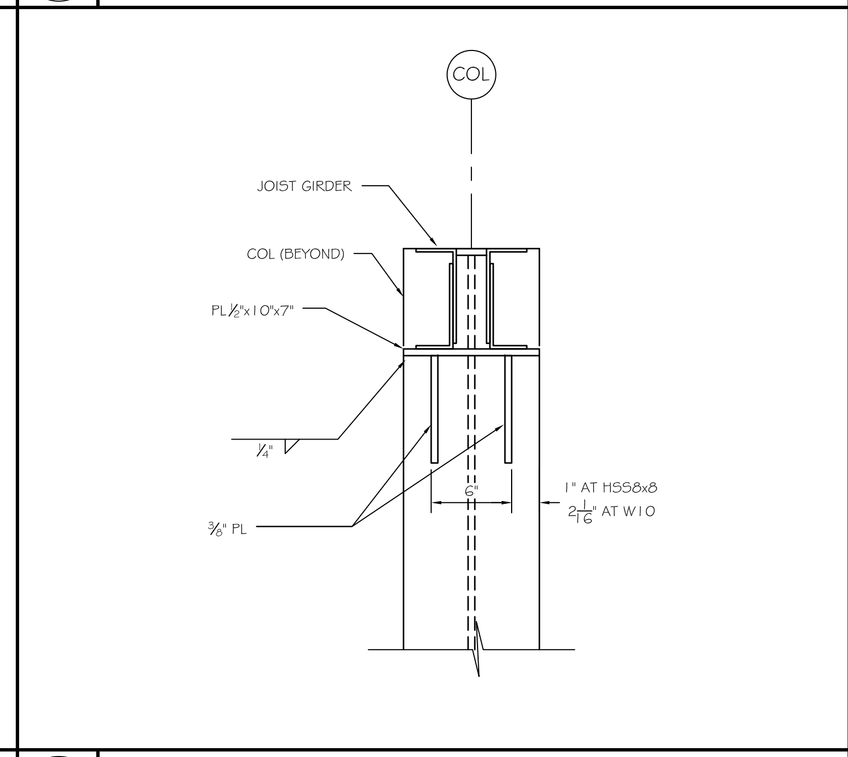


A3 DETAIL

SCALE: NTS

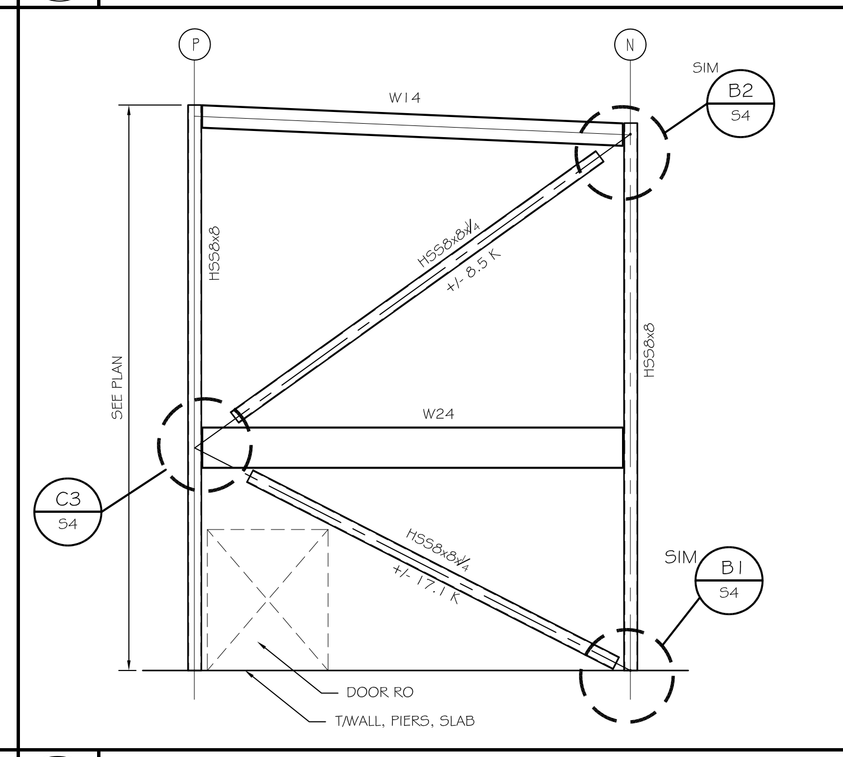


A2 BRACE FRAME 1 - LINE 10

SCALE: 3/16" = 1'-0"

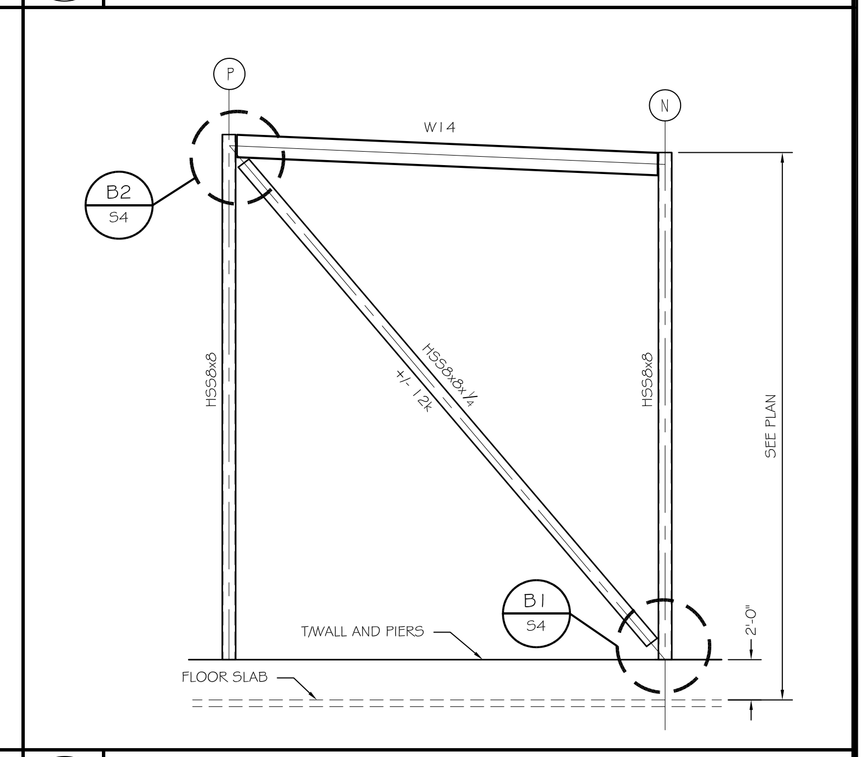


A1 BRACE FRAME 2 - LINE 1

SCALE: 3/16" = 1'-0"

STATE OF MAINE
AARON S. WILSON
No. 13429
LICENSED
PROFESSIONAL ENGINEER


ASSOCIATED DESIGN PARTNERS INC.
80 Leighton Road
Falmouth, Maine 04105
Office: (207) 878-1751
Fax: (207) 878-1788
E-Mail: adp@adpengineering.com



THIS DRAWING, DESIGN AND ELECTRONIC FILE ARE THE PROPERTY OF ASSOCIATED DESIGN PARTNERS, INC. THE REPRODUCTION, COPYING OR ANY OTHER USE OF THIS DOCUMENT WITHOUT WRITTEN CONSENT IS PROHIBITED.


PROJECT: ALLAGASH BREWHOUSE ADDITION
INDUSTRIAL WAY, PORTLAND, MAINE
FOR: ALLAGASH BREWING CO.

SHEET TITLE: FRAMING DETAILS
ISSUED FOR PERMITTING

REVISIONS

| No. | BY | DESCRIPTION | DATE |
|---|---|---|---|
| 1 | ASW | ADDENDUM #1 | 9/25/12 |
| 2 | | | |
| 3 | | | |
| 4 | | | |

DATE : 9-17-12
SCALE : 1/8"=1'-0"
DESIGN BY: ASW
DRAWN BY: RSC
FILE #: 12160-S1
PROJECT NUMBER: 12160
SHEET NO: S4

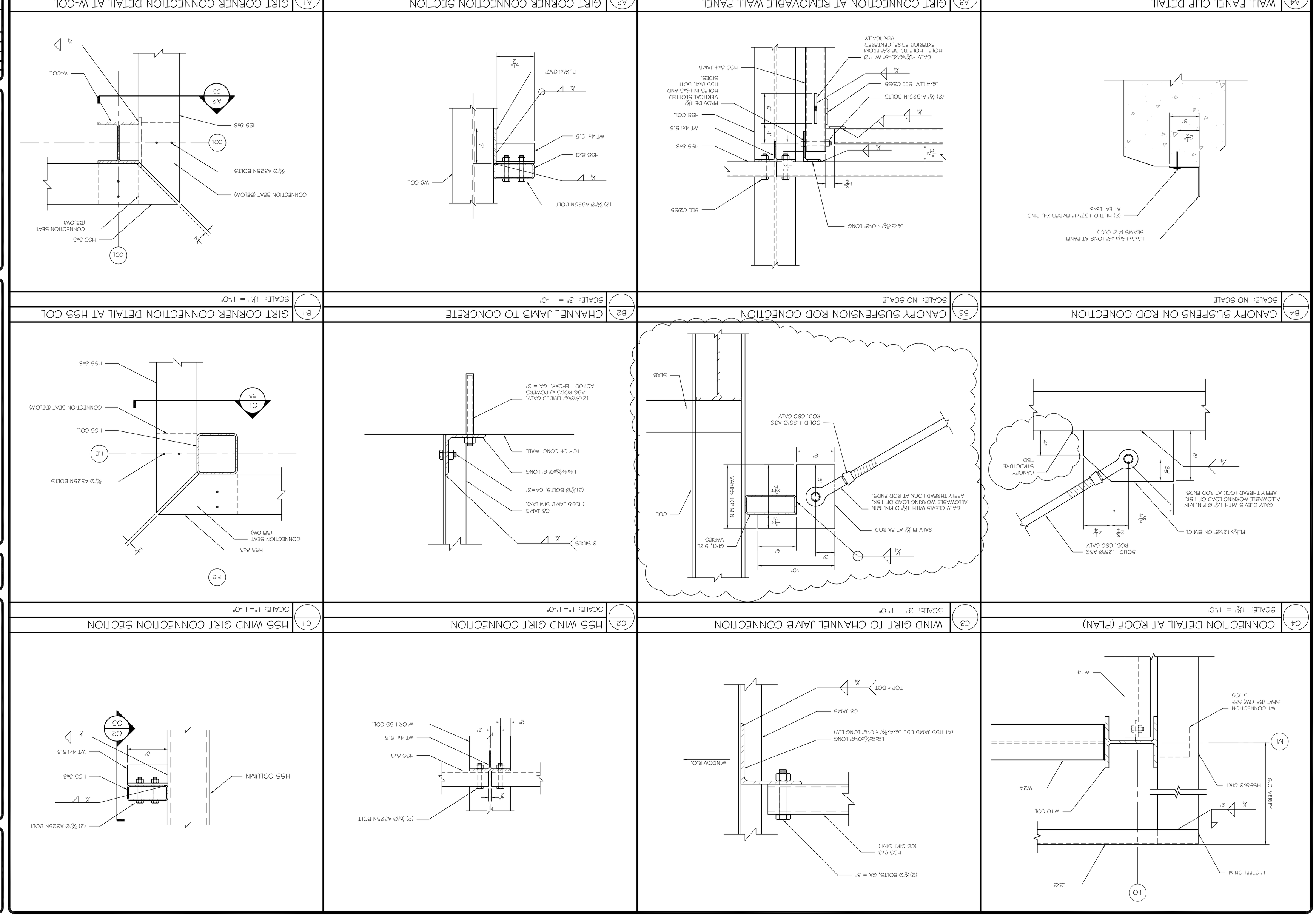


DATE : 9-17-12
SCALE : 1/8"=1'-0"
DESIGN BY: ASW
DRAWN BY: RSC
FILE #: 12160-S1
PROJECT NUMBER:
**12160**
SHEET NO:
**S5**

| REVISIONS | | | |
|---|---|---|---|
| No. | BY | DESCRIPTION | DATE |
| 1 | ASW | ADDENDUM #1 | 9/25/12 |
| 2 | | | |
| 3 | | | |
| 4 | | | |

THIS DRAWING, DESIGN AND ELECTRONIC FILE ARE THE PROPERTY OF ASSOCIATED DESIGN PARTNERS, INC. THE REPRODUCTION, COPYING OR ANY OTHER USE OF THIS DOCUMENT WITHOUT WRITTEN CONSENT IS PROHIBITED.

ASSOCIATED DESIGN PARTNERS INC.
80 Leighton Road
Falmouth, Maine 04105
Office: (207) 878-1751
Fax: (207) 878-1788
E-Mail: adp@adpengineering.com

STATE OF MAINE
AARON R. WILSON
No. 10429
LICENSED
PROFESSIONAL ENGINEER

PROJECT:
# ALLAGASH BREWHOUSE ADDITION
## INDUSTRIAL WAY, PORTLAND, MAINE
FOR: ALLAGASH BREWING CO.

SHEET TITLE:
## FRAMING DETAILS
## ISSUED FOR PERMITTING

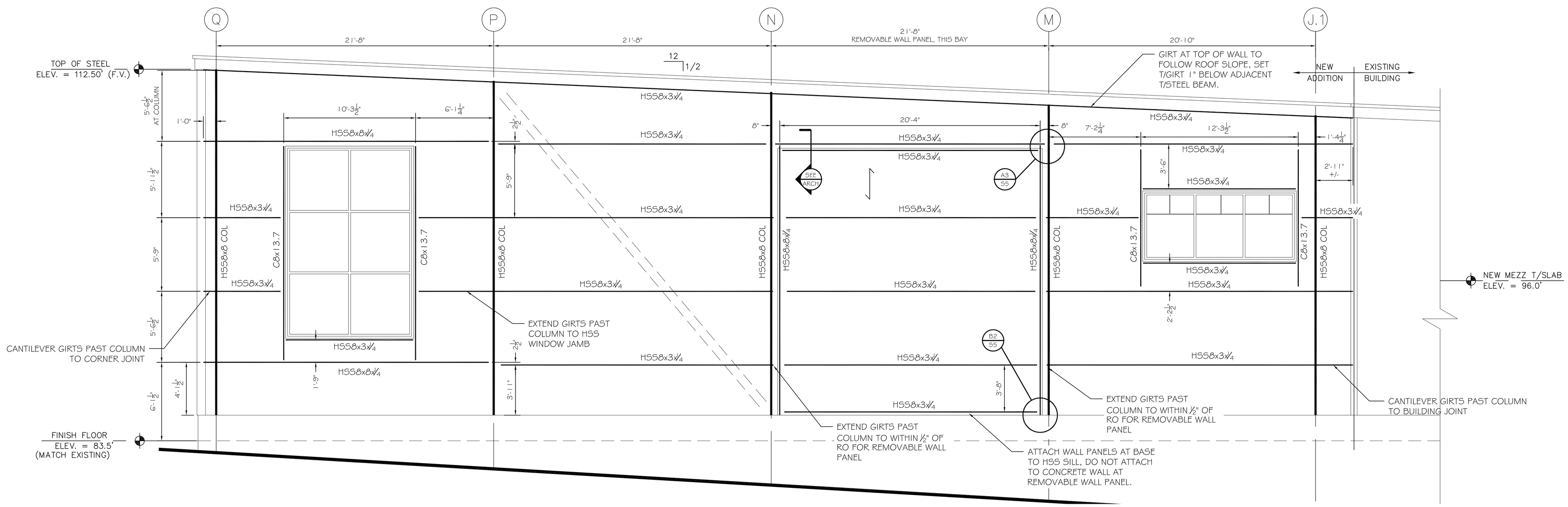


B4 EAST ELEVATION WALL GIRTS

SCALE: ¼" = 1'-0"

FRAMING NOTES:

1. ⟷ INDICATES SPAN DIRECTION OF 3" INSULATED METAL WALL PANELS. PROVIDE PE STAMPED CALCULATIONS FOR METAL WALL PANELS AND FASTENERS IN ACCORDANCE WITH IBC 2009 AND ASCE 7-05. SEE SHEET S2 FOR WIND REGION CRITERIA.
2. CONTRACTOR VERIFY ALL DIMENSIONS NOTED (+/-), AND ALL WINDOW/DOOR ROUGH OPENINGS PRIOR TO FABRICATION.
3. ALL HORIZONTAL C-GIRTS TO HAVE FLANGES FACING DOWN TO ALLOW FOR WASH-DOWN CLEANING.
4. GIRT SPACING BASED ON KINGSPAN 300 SERIES INSULATED METAL WALL PANELS AND ASCE 7-05 WIND LOADS. CONTRACTOR VERIFY ALLOWABLE SPAN OF ACTUAL METAL WALL PANELS PURCHASED.
5. GRAVITY BEAMS AT MEZZANINE AND ROOF NOT SHOWN, SEE S1.

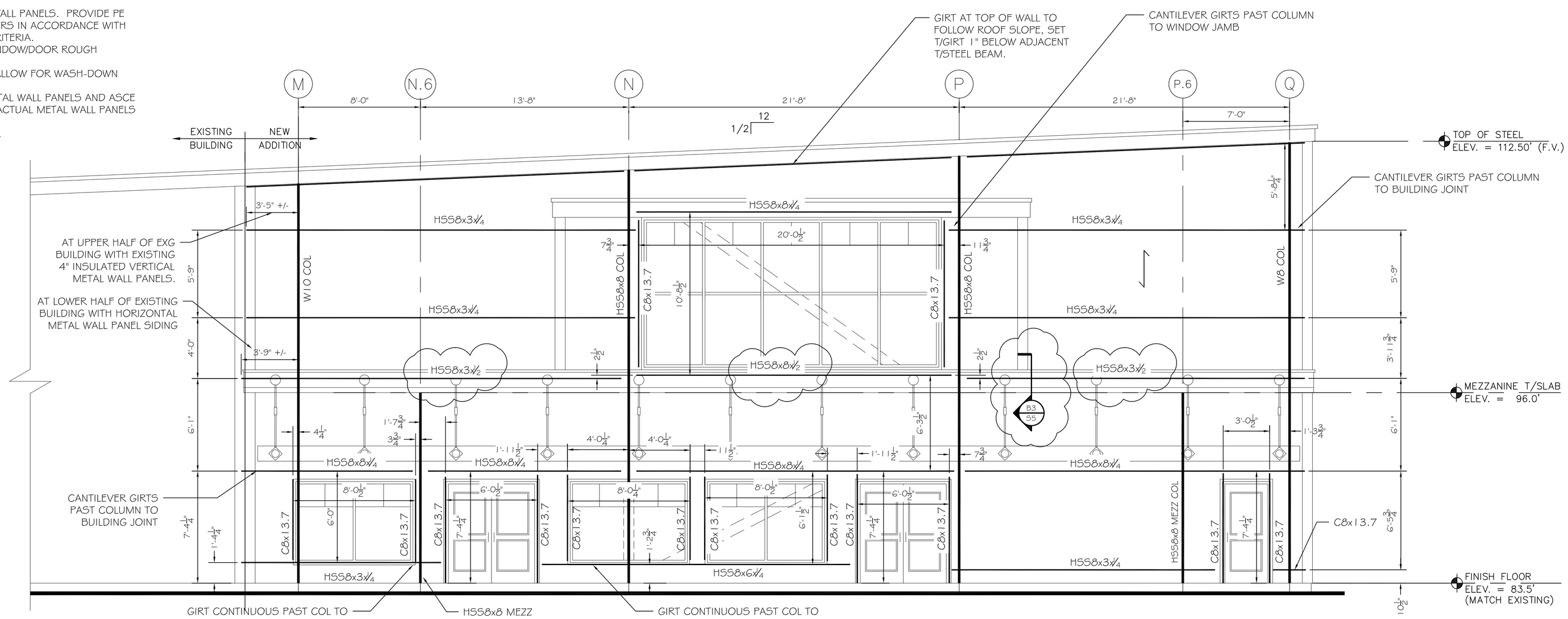


A4 WEST ELEVATION WALL GIRTS

SCALE: ¼" = 1'-0"


STATE OF MAINE AARON S. WILSON No. 13429 LICENSED PROFESSIONAL ENGINEER

ASSOCIATED DESIGN PARTNERS INC.
80 Leighton Road
Falmouth, Maine 04105
Office: (207) 878-1751
Fax: (207) 878-1788
E-Mail: adp@adpengineering.com



THIS DRAWING, DESIGN AND ELECTRONIC FILE ARE THE PROPERTY OF ASSOCIATED DESIGN PARTNERS, INC. THE REPRODUCTION, COPYING OR ANY OTHER USE OF THIS DOCUMENT WITHOUT WRITTEN CONSENT IS PROHIBITED.


PROJECT: ALLAGASH BREWHOUSE ADDITION
INDUSTRIAL WAY, PORTLAND, MAINE
FOR: ALLAGASH BREWING CO.

SHEET TITLE: FRAMING DETAILS
ISSUED FOR PERMITTING

REVISIONS

| No. | BY | DESCRIPTION | DATE |
|---|---|---|---|
| 1 | ASW | ADDENDUM #1 | 9/25/12 |
| 2 | | | |
| 3 | | | |
| 4 | | | |

DATE : 9-17-12
SCALE : 1/8"=1'-0"
DESIGN BY: ASW
DRAWN BY: RSC
FILE #: 12160-S1
PROJECT NUMBER: 12160
SHEET NO: S6

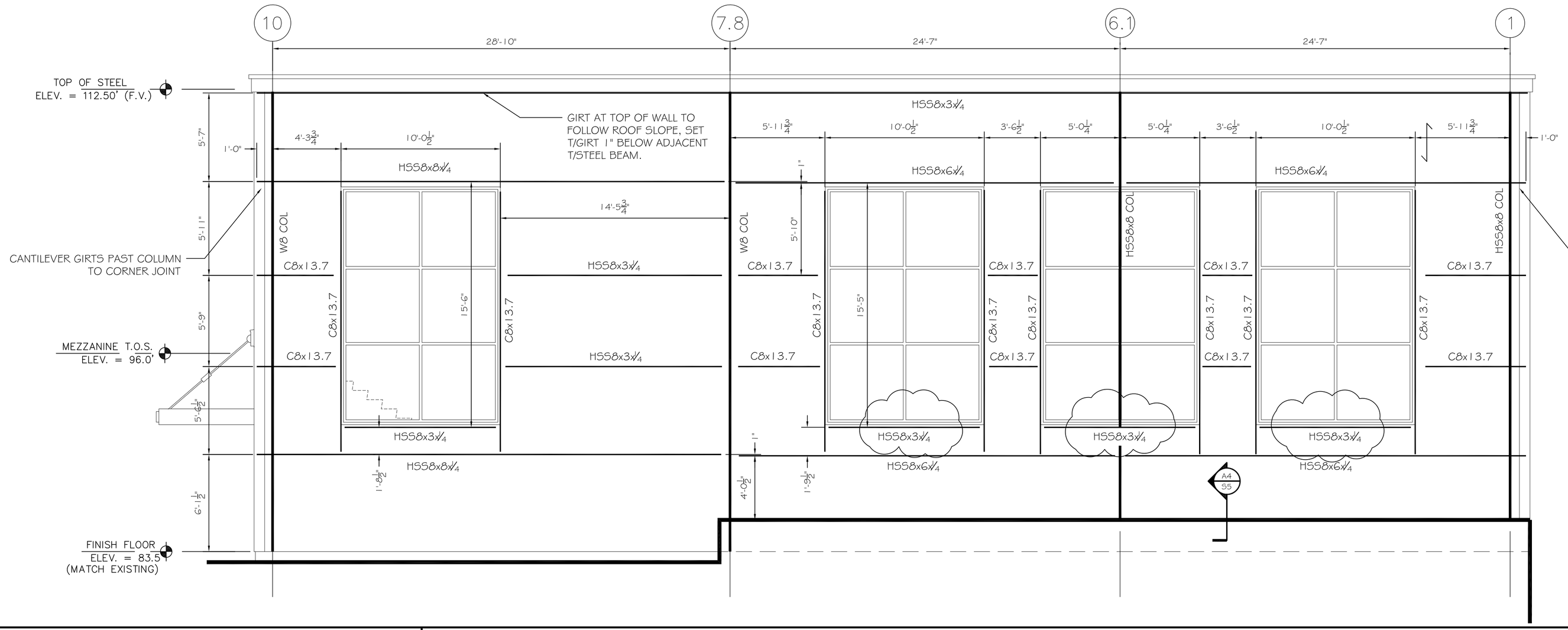


FRAMING NOTES:

1. ⟋ INDICATES SPAN DIRECTION OF 3" INSULATED METAL WALL PANELS. PROVIDE PE STAMPED CALCULATIONS FOR METAL WALL PANELS AND FASTENERS IN ACCORDANCE WITH IBC 2009 AND ASCE 7-05. SEE SHEET S2 FOR WIND REGION CRITERIA.
2. CONTRACTOR VERIFY ALL DIMENSIONS NOTED (+/-).
3. ALL HORIZONTAL C-GIRTS TO HAVE FLANGES FACING DOWN TO ALLOW FOR WASH-DOWN CLEANING.
4. ALL VERTICAL C-JAMBS TO HAVE FLANGES FACING AWAY FROM WINDOW RO.
5. ALL DIMENSIONS AS HSS MEMBERS ARE TO CENTER LINE.
6. ALL DIMENSIONS TO CHANNEL MEMBERS ARE TO BACK OF WEB.

B4

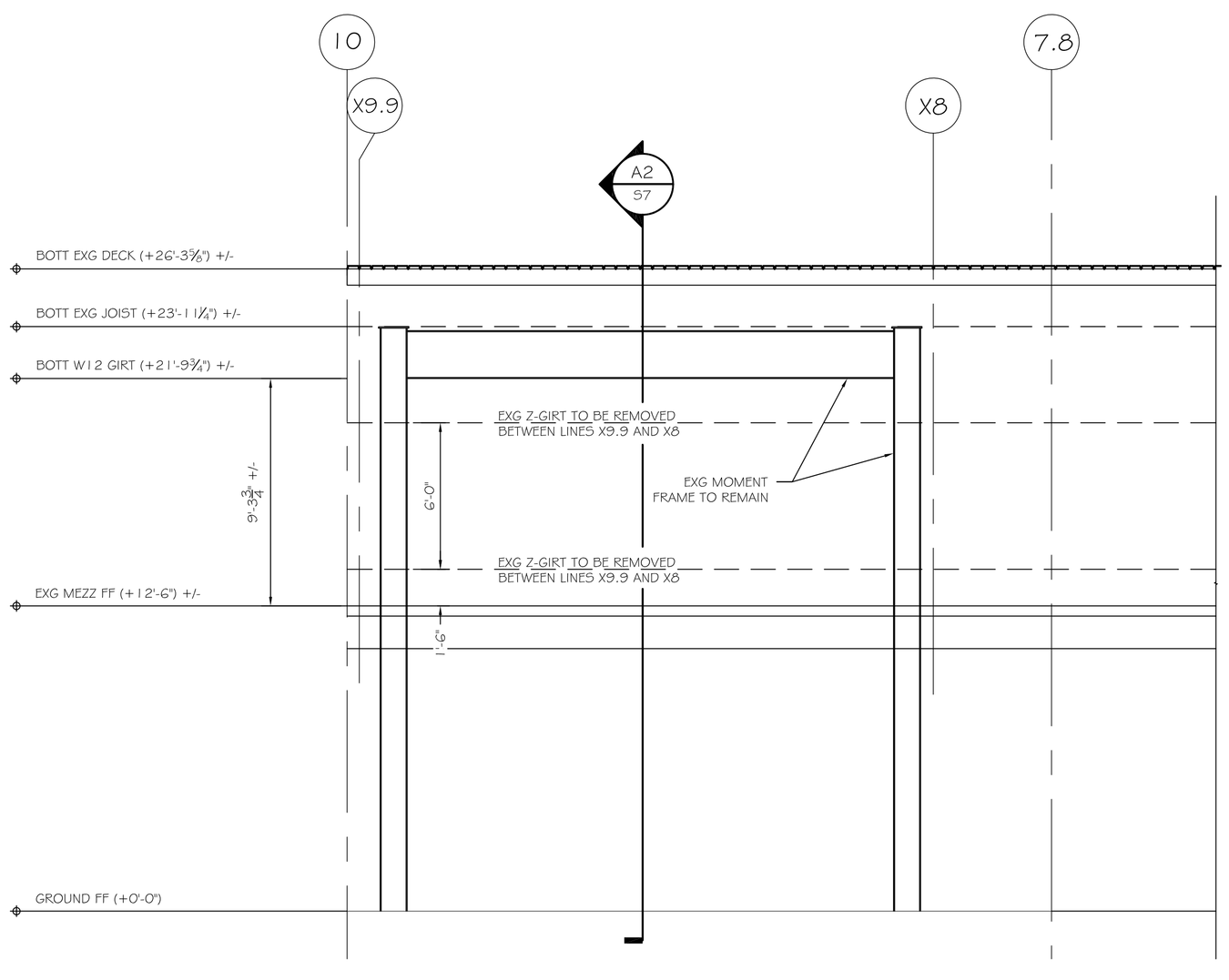


A4 FRAMING SECTION AT EXG

SCALE: 1/4" = 1'-0"

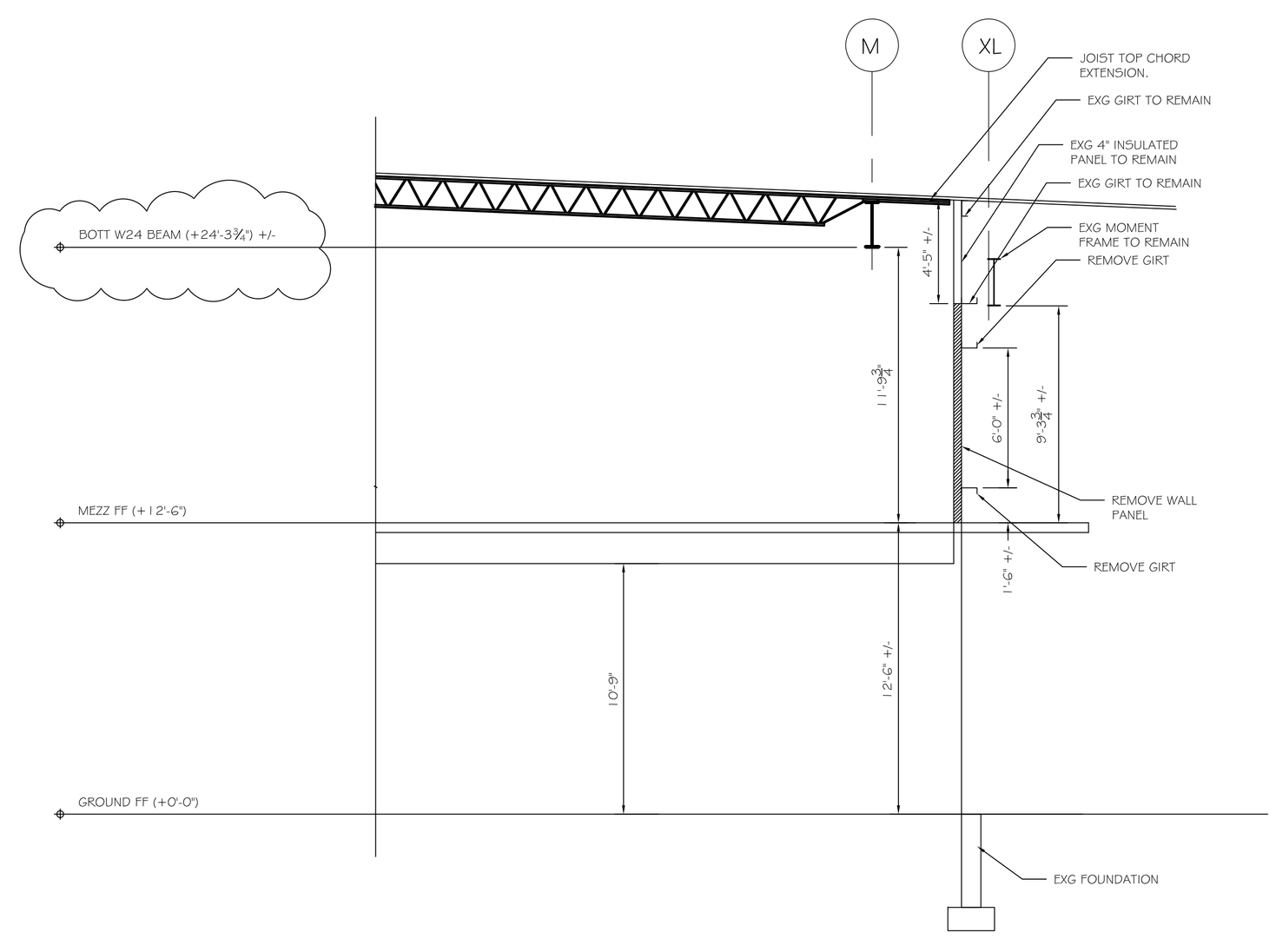


A2 FRAMING SECTION THROUGH NEW AND EXG

SCALE: 1/4" = 1'-0"

STATE OF MAINE AARON S. WILSON No. 13429 LICENSED PROFESSIONAL ENGINEER


ASSOCIATED DESIGN PARTNERS INC.
80 Leighton Road
Falmouth, Maine 04105
Office: (207) 878-1751
Fax: (207) 878-1788
E-Mail: adp@adpengineering.com



THIS DRAWING, DESIGN AND ELECTRONIC FILE ARE THE PROPERTY OF ASSOCIATED DESIGN PARTNERS, INC. THE REPRODUCTION, COPYING OR ANY OTHER USE OF THIS DOCUMENT WITHOUT WRITTEN CONSENT IS PROHIBITED.


PROJECT: ALLAGASH BREWHOUSE ADDITION
INDUSTRIAL WAY, PORTLAND, MAINE
FOR: ALLAGASH BREWING CO.

SHEET TITLE: FRAMING SECTIONS ISSUED FOR PERMITTING

REVISIONS

| No. | BY | DESCRIPTION | DATE |
|---|---|---|---|
| 1 | ASW | ADDENDUM #1 | 9/25/12 |
| 2 | | | |
| 3 | | | |
| 4 | | | |

DATE : 9-17-12
SCALE : AS NOTED
DESIGN BY: ASW
DRAWN BY: ASW
FILE #: 12160-S1
PROJECT NUMBER: 12160
SHEET NO: S7

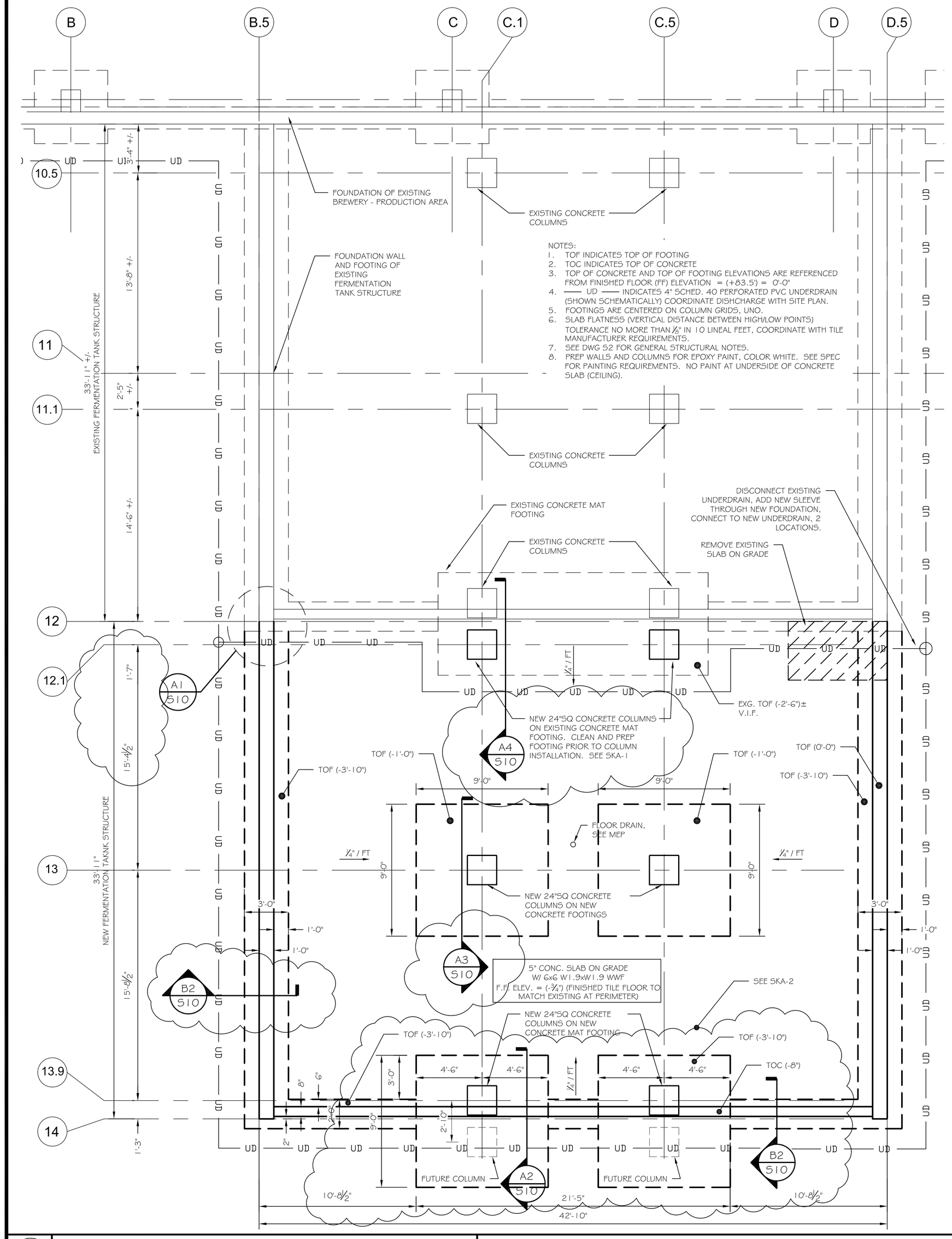


A2 FOUNDATION PLAN

SCALE: 1/4" = 1'-0"

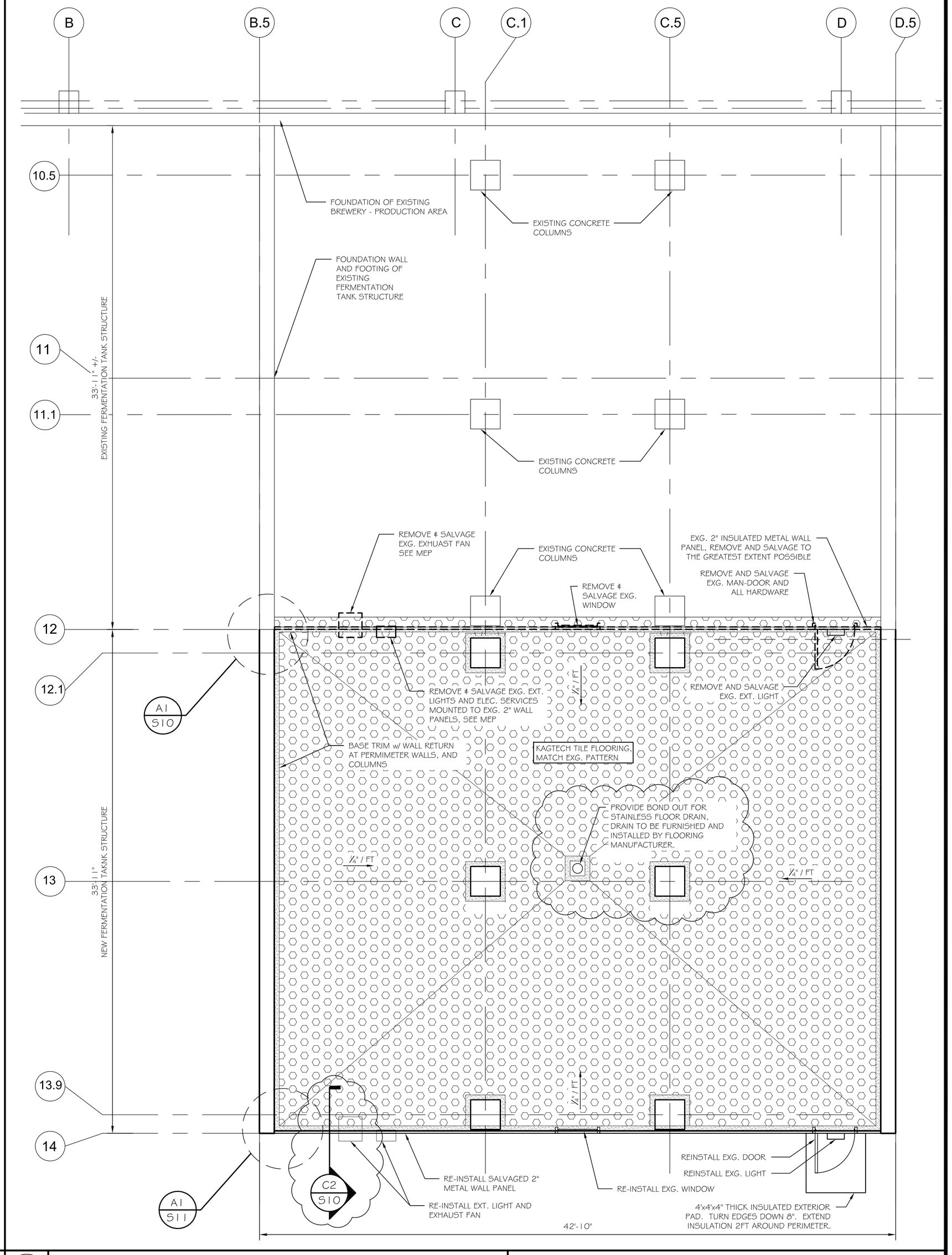


A1 GROUND FLOOR PLAN

1/4" = 1'-0"

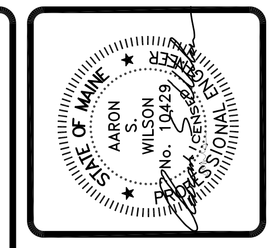



ASSOCIATED DESIGN PARTNERS INC.

80 Leighton Road
Falmouth, Maine 04105

Office: (207) 878-1751
Fax: (207) 878-1788
E-Mail: adp@adpengineering.com



THIS DRAWING, DESIGN AND ELECTRONIC FILE ARE THE PROPERTY OF ASSOCIATED DESIGN PARTNERS, INC. THE REPRODUCTION, COPYING OR ANY OTHER USE OF THIS DOCUMENT WITHOUT WRITTEN CONSENT IS PROHIBITED.


PROJECT: ALLAGASH BREWERY
FERMENTATION SUPPORT STRUCTURE
FOR: ALLAGASH BREWING CO., 50 INDUSTRIAL WAY, PORTLAND ME

SHEET TITLE: FOUNDATION AND FLOOR PLAN
ISSUED FOR PERMITTING

REVISIONS

| No. | BY | DESCRIPTION | DATE |
|---|---|---|---|
| 1 | ASW | ADDENDUM #1 | 9/25/12 |
| 2 | | | |
| 3 | | | |
| 4 | | | |

DATE : 9-17-12
SCALE : AS NOTED
DESIGN BY: ASW
DRAWN BY: RSC
FILE #: 12160-S1
PROJECT NUMBER: 12248
SHEET NO: S8

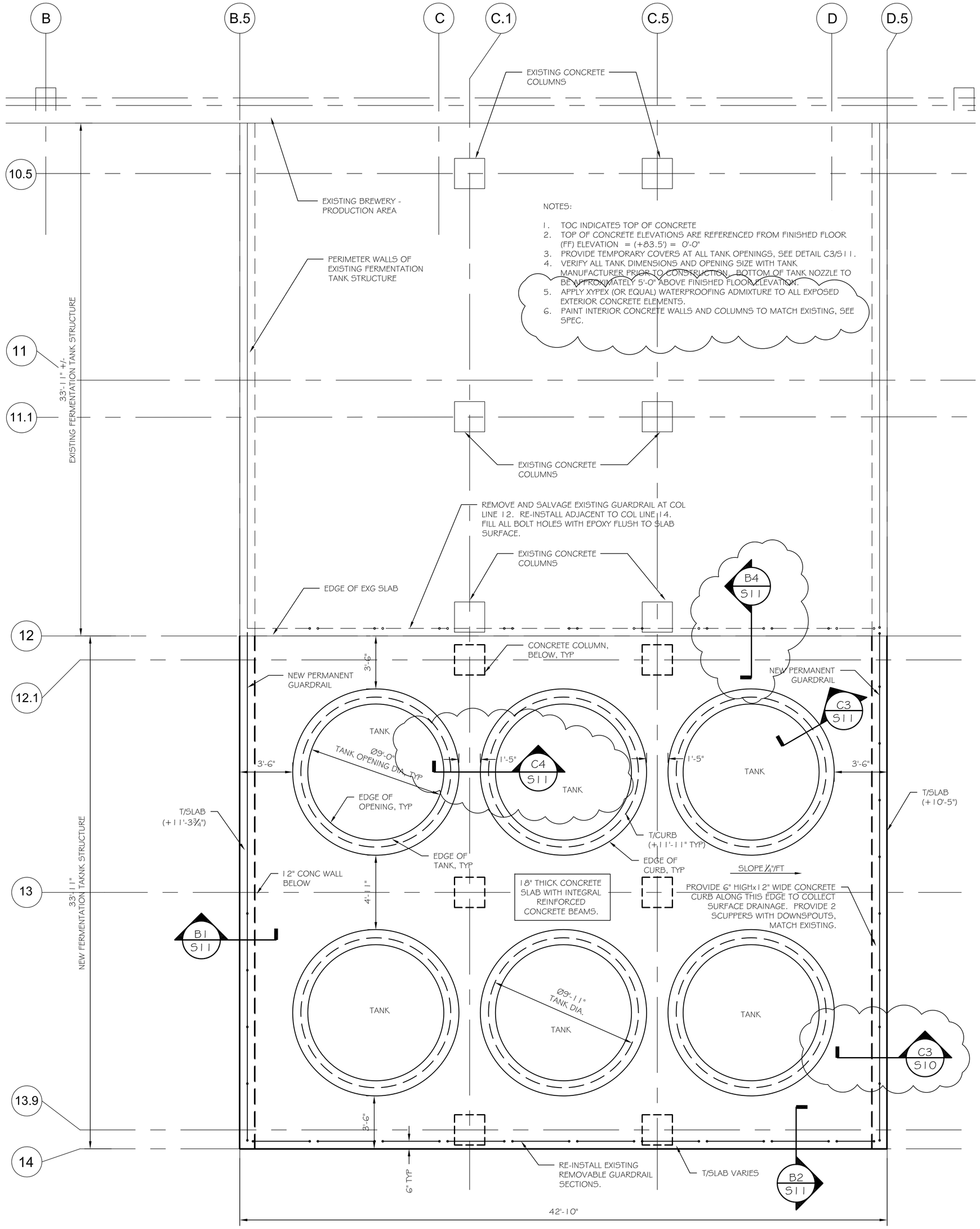


A2 ROOF SLAB PLAN

SCALE: 1/4" = 1'-0"

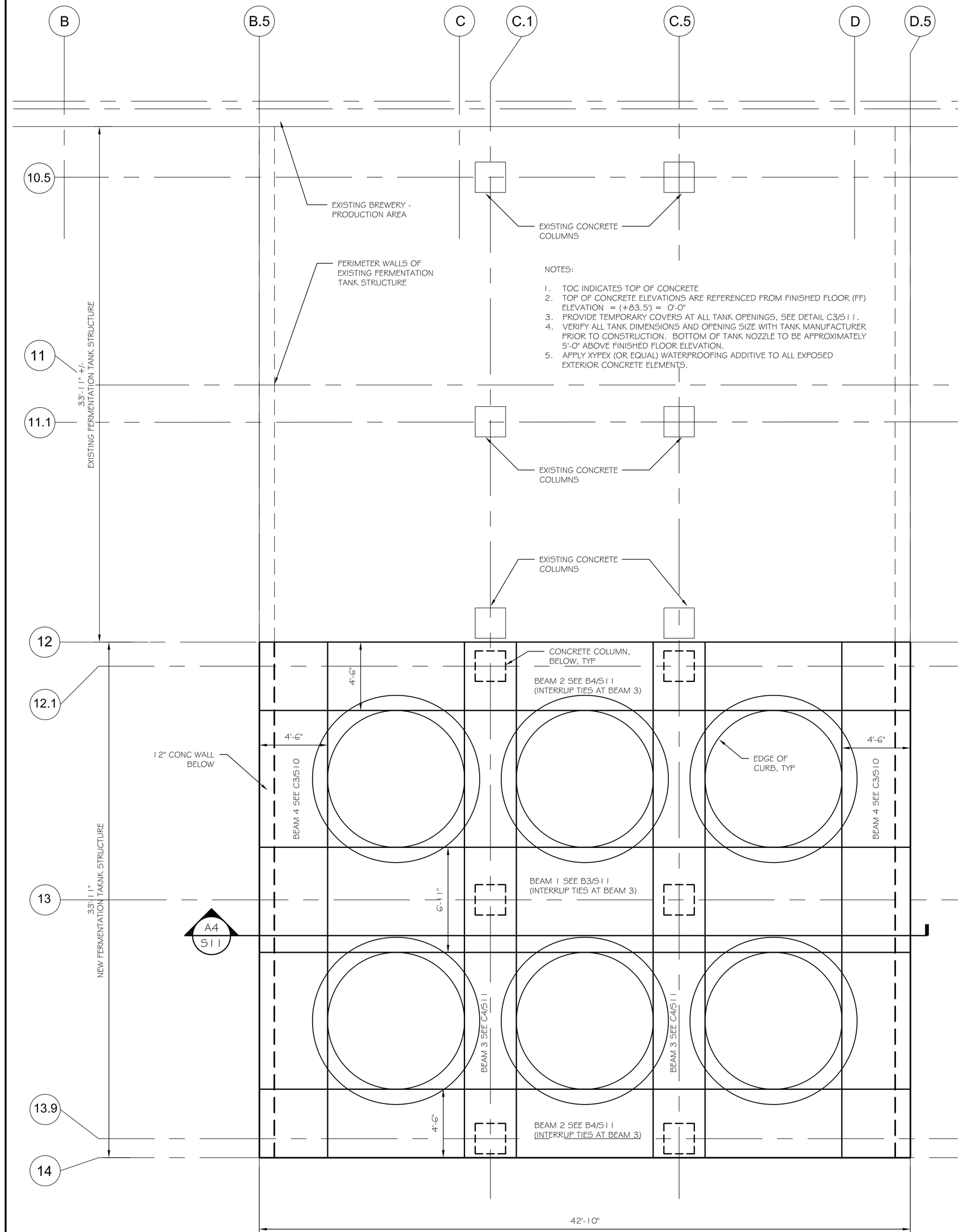


A1 ROOF BEAM PLAN

1/4" = 1'-0"


STATE OF MAINE AARON S. WILSON No. 13429 REGISTERED PROFESSIONAL ENGINEER

ASSOCIATED DESIGN PARTNERS INC.

80 Leighton Road
Falmouth, Maine 04105

Office: (207) 878-1751
Fax: (207) 878-1788
E-Mail: adp@adpengineering.com



THIS DRAWING, DESIGN AND ELECTRONIC FILE ARE THE PROPERTY OF ASSOCIATED DESIGN PARTNERS, INC. THE REPRODUCTION, COPYING OR ANY OTHER USE OF THIS DOCUMENT WITHOUT WRITTEN CONSENT IS PROHIBITED.


PROJECT: ALLAGASH BREWERY
FERMENTATION TANK STRUCTURE
FOR: ALLAGASH BREWING CO. 50 INDUSTRIAL WAY, PORTLAND ME

SHEET TITLE: ROOF SLAB PLANS
ISSUED FOR PERMITTING

REVISIONS

| No. | BY | DESCRIPTION | DATE |
|---|---|---|---|
| 1 | ASW | ADDENDUM #1 | 9/25/12 |
| 2 | | | |
| 3 | | | |
| 4 | | | |

DATE : 9-17-12
SCALE : AS NOTED
DESIGN BY: ASW
DRAWN BY: RSC
FILE #: 12160-S1
PROJECT NUMBER: 12248
SHEET NO: S9

NOTES
1. SEE DRAWING S2 FOR GENERAL STRUCTURAL NOTES.

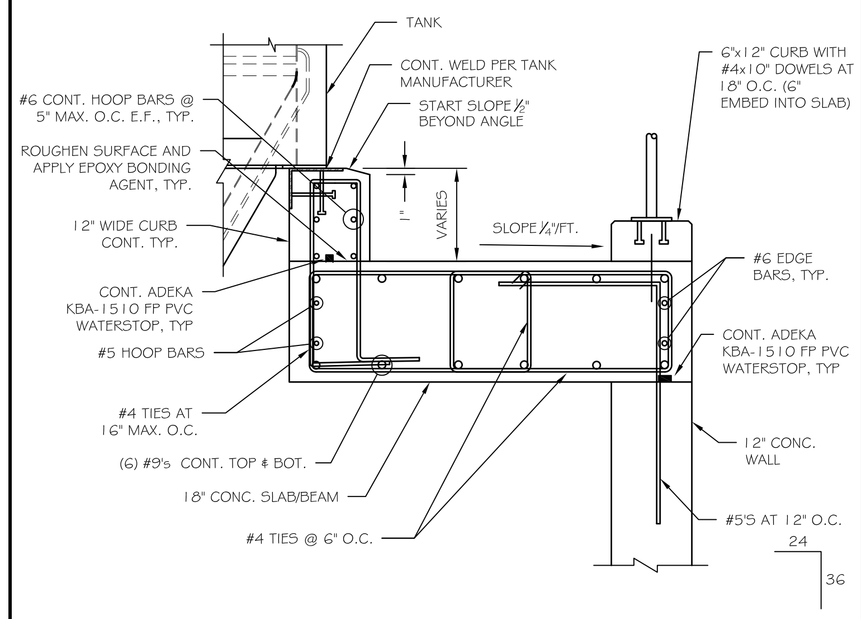


C3 DETAIL THRU PERIMETER AND BEAM 4
SCALE: 3/4"=1'-0"

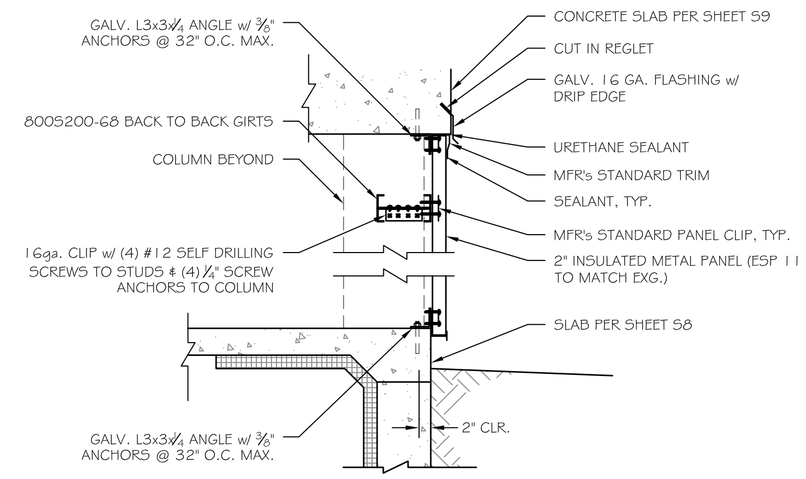


C2 INSULATED PANEL WALL SECTION
SCALE: 3/4" = 1'-0"

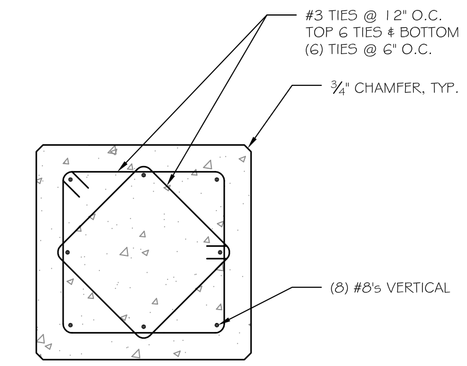


C1 TYP. COLUMN REINFORCING LAYOUT
SCALE: 1" = 1'-0"

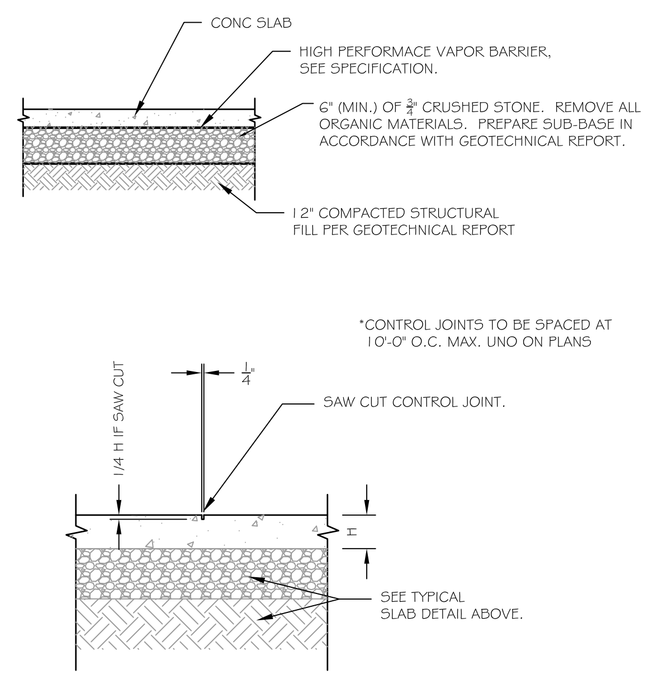


B4 TYPICAL SLAB ON GRADE DETAILS
SCALE: NO SCALE

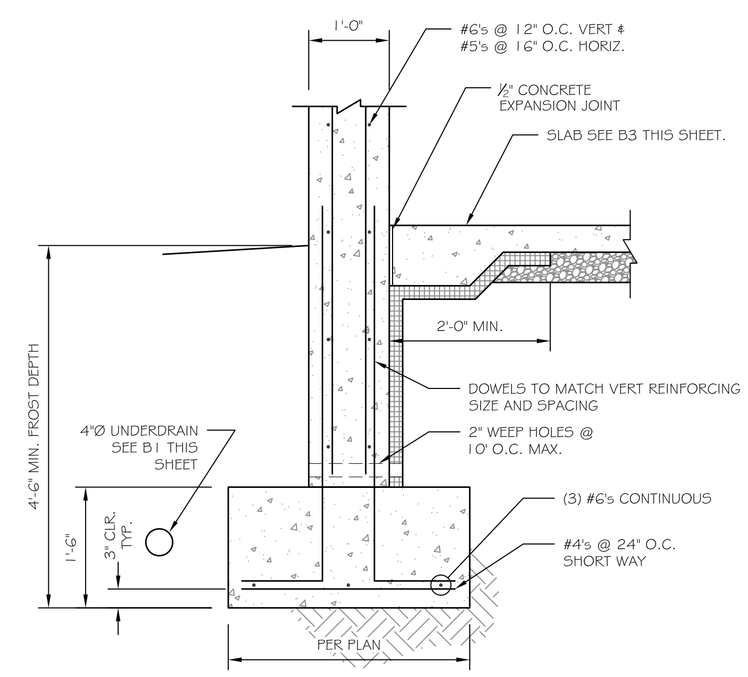


B2 DETAIL AT 12" CONCRETE WALL
SCALE: 3/4" = 1'-0"

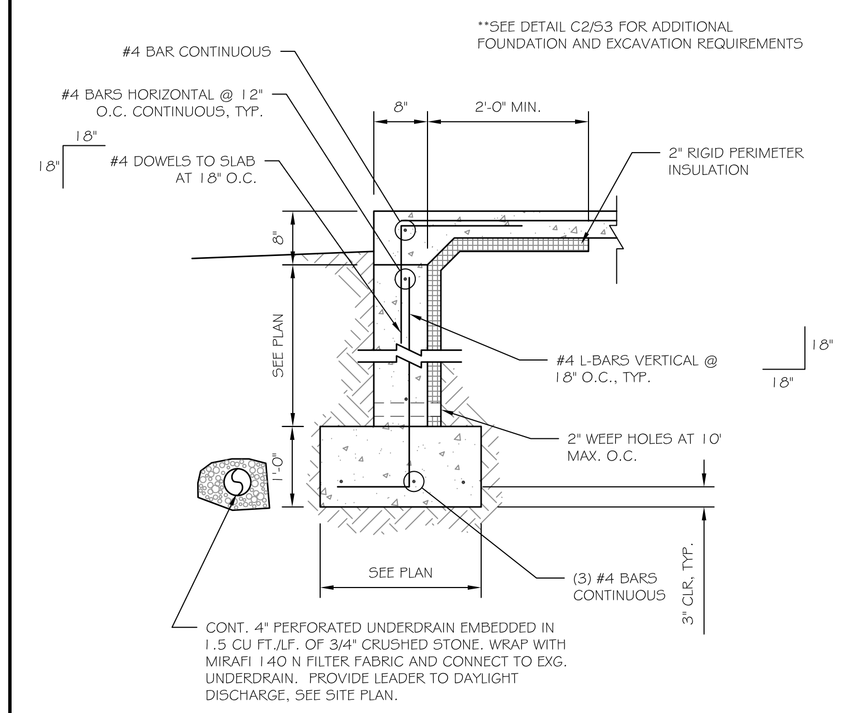


B1 TYP. STEM WALL DETAIL
SCALE: 3/4" = 1'-0"

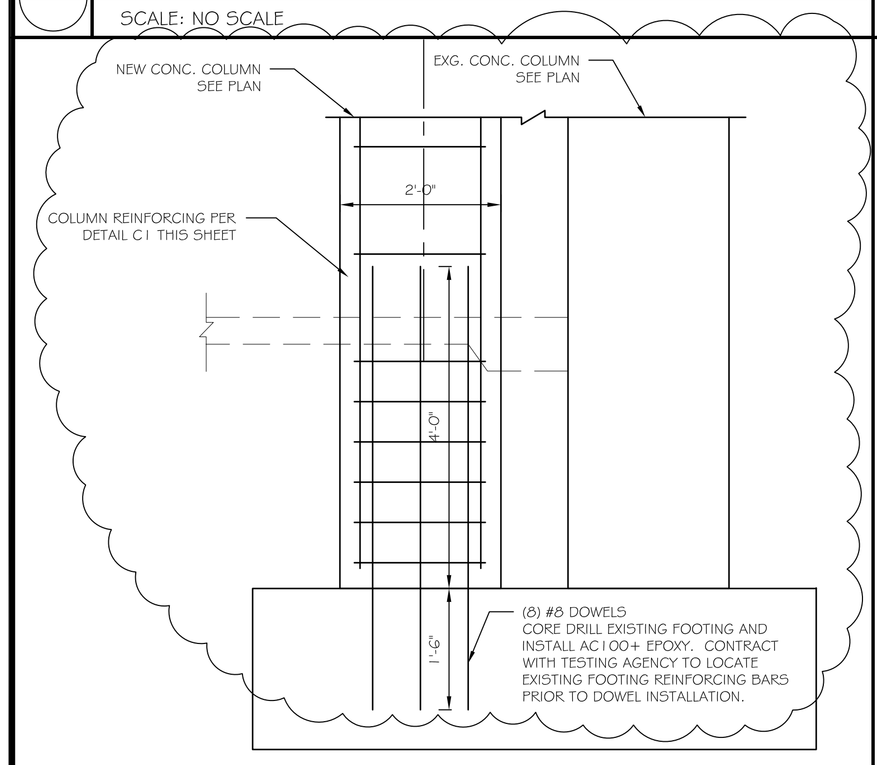


A4 COLUMN AT EXISTING FOOTING
SCALE: 3/4" = 1'-0"

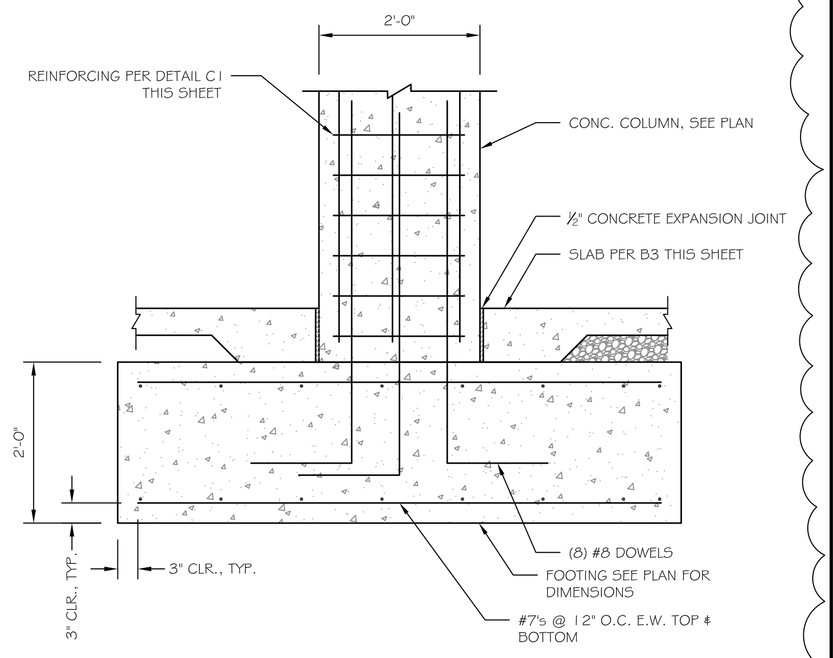


A3 COLUMN AND FOOTING AT INTERIOR
SCALE: 3/4" = 1'-0"

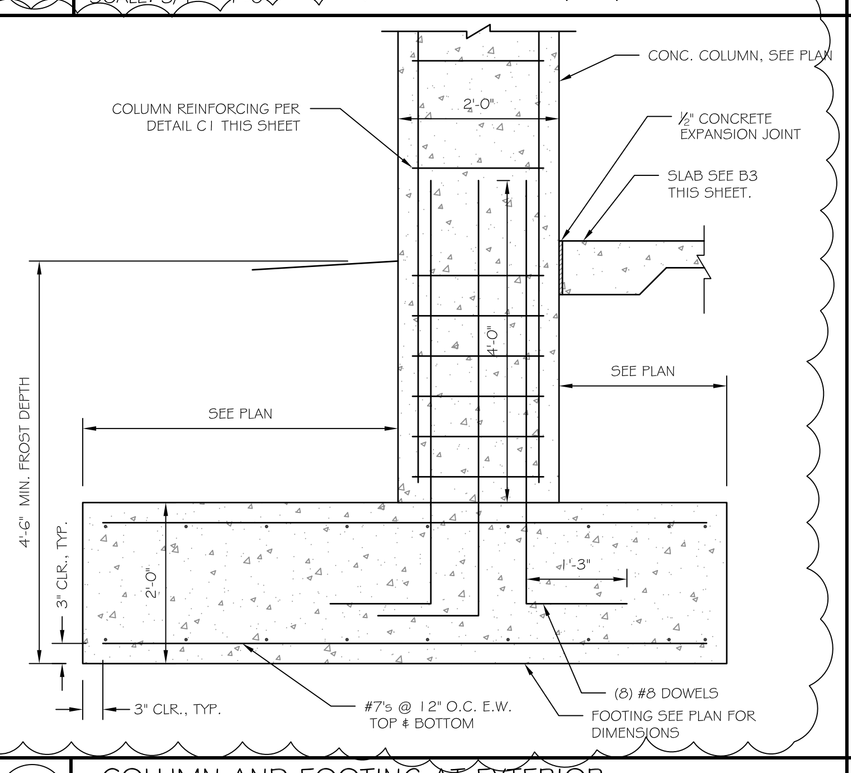


A2 COLUMN AND FOOTING AT EXTERIOR
SCALE: 3/4"=1'-0"

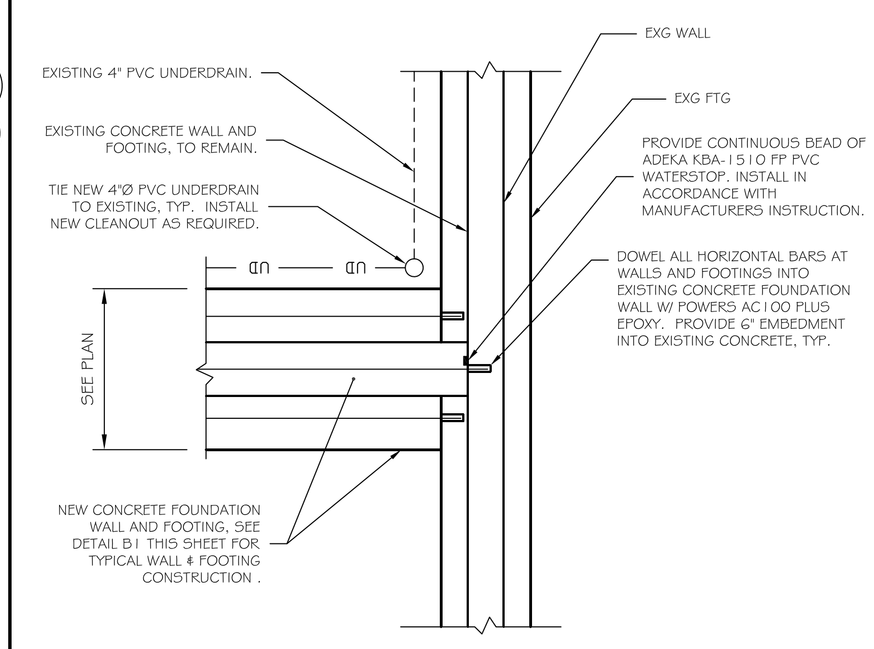


A1 NEW CONC. WALL TO EXISTING DETAIL
SCALE: 1/2"=1'-0"

STATE OF MAINE AARON S. WILSON No. 13429 LICENSED PROFESSIONAL ENGINEER


ASSOCIATED DESIGN PARTNERS INC.
80 Leighton Road
Falmouth, Maine 04105
Office: (207) 878-1751
Fax: (207) 878-1788
E-Mail: adp@adpengineering.com



THIS DRAWING, DESIGN AND ELECTRONIC FILE ARE THE PROPERTY OF ASSOCIATED DESIGN PARTNERS, INC. THE REPRODUCTION, COPYING OR ANY OTHER USE OF THIS DOCUMENT WITHOUT WRITTEN CONSENT IS PROHIBITED.


PROJECT: ALLAGASH BREWERY
FERMENTATION SUPPORT STRUCTURE
FOR: ALLAGASH BREWING CO, 50 INDUSTRIAL WAY, PORTLAND ME

SHEET TITLE: FOUNDATION AND COLUMN DETAILS
ISSUED FOR PERMITTING

REVISIONS

| No. | BY | DESCRIPTION | DATE |
|---|---|---|---|
| 1 | ASW | ADDENDUM #1 | 9/25/12 |
| 2 | | | |
| 3 | | | |
| 4 | | | |

DATE : 9-17-12
SCALE : AS NOTED
DESIGN BY: ASW
DRAWN BY: RSC
FILE #: 12160-S1
PROJECT NUMBER: 12248
SHEET NO: S10

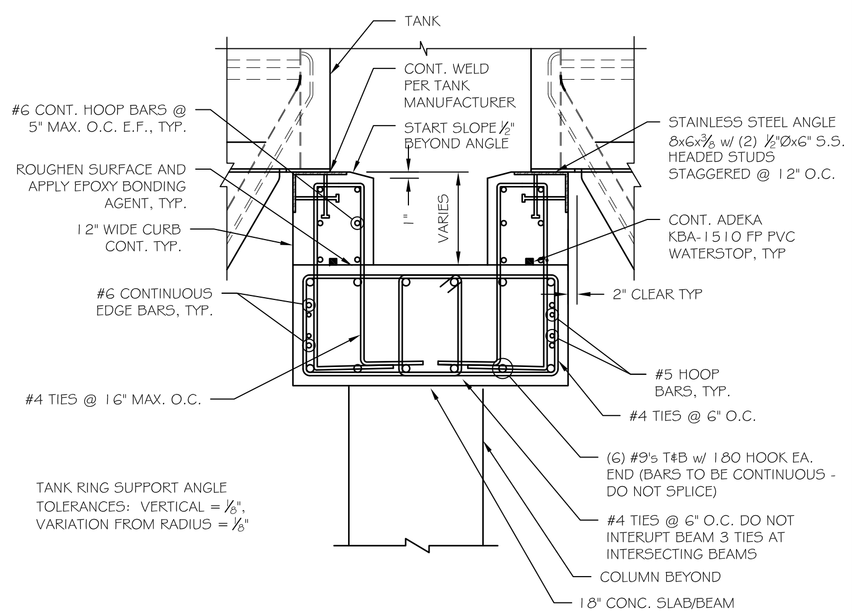


C4 DETAIL THRU TYP. CURB AND BEAM 3

SCALE: ¾"= 1'-0"

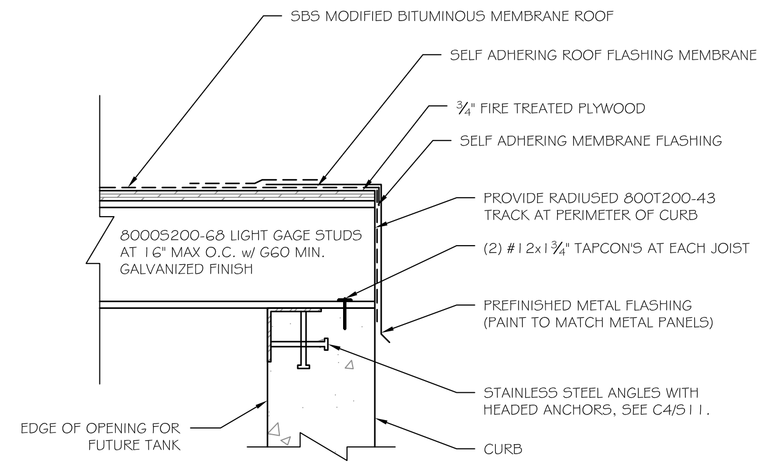


1. ALL STEEL USED SHALL CONFORM TO ASTM A446, WITH A MINIMUM Fy=33 KSI FOR 18 AND 20 GAGE, AND Fy=50KSI FOR 12, 14, & 16 GAGE MEMBERS. STRUCTURAL MEMBERS SHALL BE ZINC-COATED, MEETING ASTM A525, G60 OR EQUIVALENT.

2. ALL STUD WALLS SHALL HAVE HORIZONTAL BRIDGING AND CROSS BRACING INSTALLED AT MID-SPAN. ALL BRACING SHALL BE INSTALLED BEFORE APPLICATION OF LOADS.

C3 TEMPORARY OPENING COVER DETAIL

SCALE: 1½"= 1'-0"

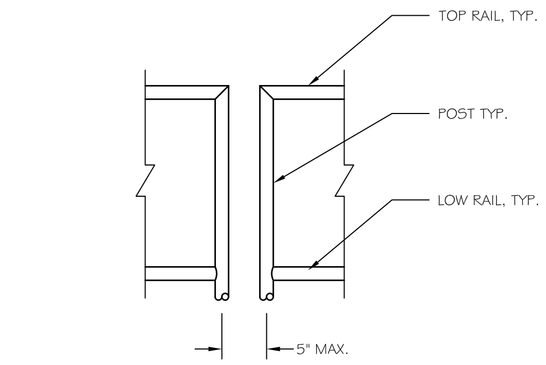


C2 POSTS AT REMOVABLE GUARDRAIL

SCALE: 1"= 1'-0"

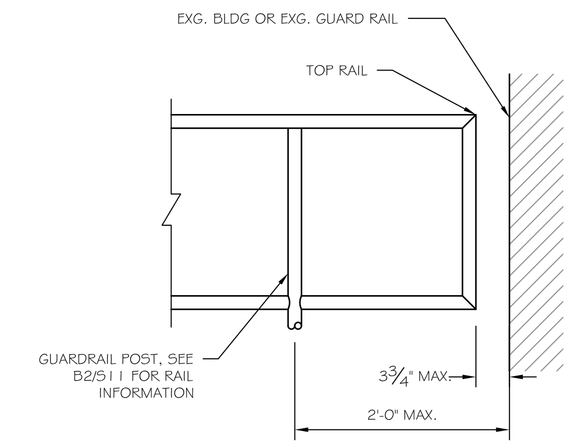


C1 GUARDRAIL EXTENSION DETAIL

SCALE: 1"= 1'-0"

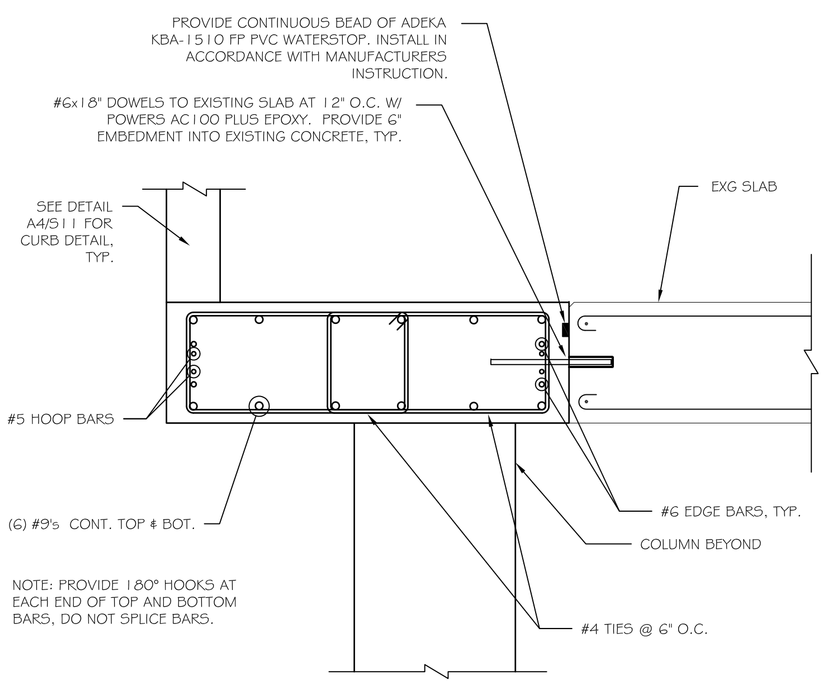


B4 BEAM 2 SCHEMATIC REINFORCING LAYOUT

SCALE: ¾"= 1'-0"

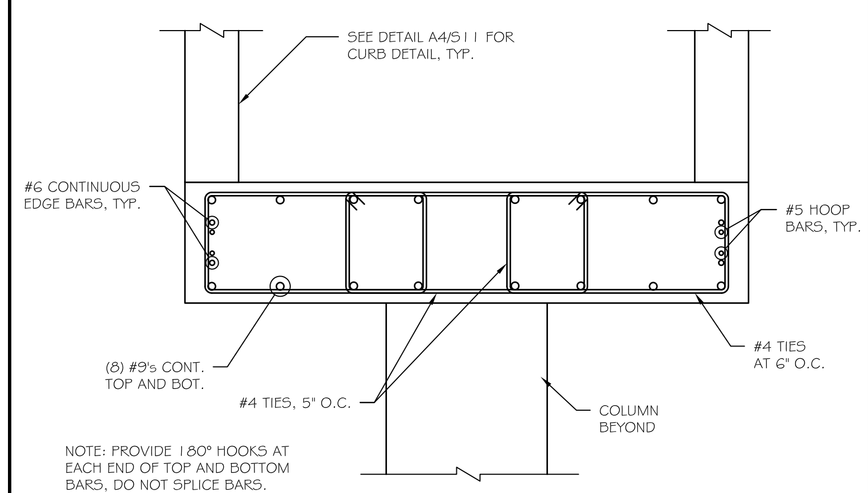


B3 BEAM 1 SCHEMATIC REINFORCING LAYOUT

SCALE: ¾"= 1'-0"

GUARDRAIL NOTES:
1. GUARDRAILS TO BE CONSTRUCTED w/ 1½" NOM. Ø STD STEEL, GALVANIZED PIPE.
2. WELDS SHALL BE 3/16" FILLET WELDS, USE BUTT WELDS WHERE APPLICABLE. GRIND ALL WELDS SMOOTH
3. AT ENDS OF RAIL NEAR EXISTING RAILS, EXTEND RAILS TO WITHIN 3¾" OF EXISTING AND PROVIDE SQUARE END, SEE DTL. C1/511
4. ALL GUARDRAIL POSTS TO BE SPACED 4FT O.C. MAX.

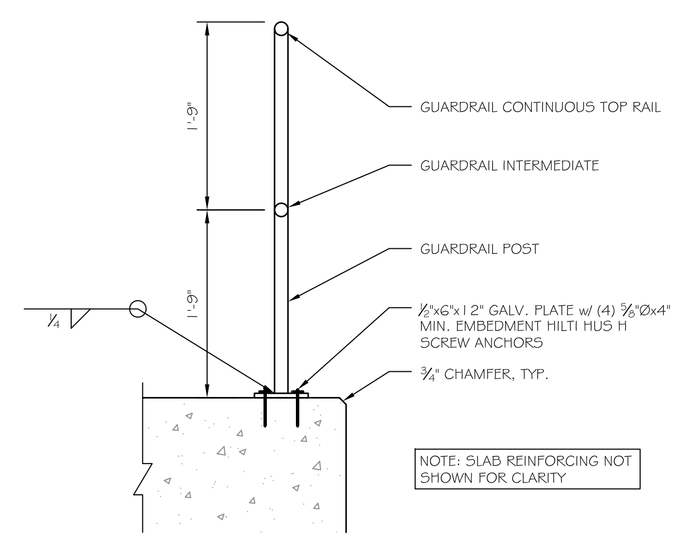


B2 REMOVABLE GUARDRAIL BASE

SCALE: 1"= 1'-0"

GUARDRAIL NOTES:
1. GUARDRAILS TO BE CONSTRUCTED w/ 1½" NOM. Ø STD STEEL, GALVANIZED PIPE.
2. WELDS SHALL BE 3/16" FILLET WELDS, USE BUTT WELDS WHERE APPLICABLE. GRIND ALL WELDS SMOOTH
3. AT ENDS OF RAIL NEAR EXISTING RAILS, EXTEND RAILS TO WITHIN 3¾" OF EXISTING AND PROVIDE SQUARE END, SEE DTL. C1/511
4. ALL GUARDRAIL POSTS TO BE SPACED 4FT O.C. MAX.

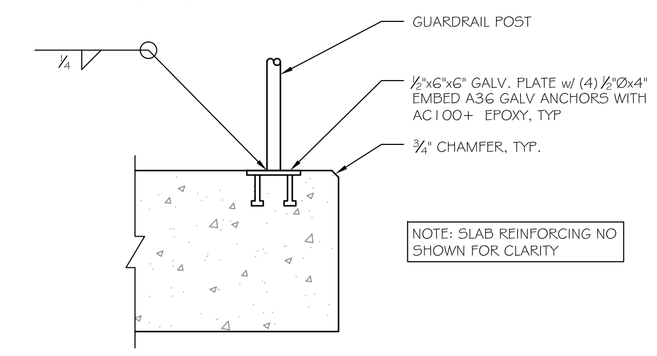


B1 PERMENANT GUARDRAIL BASE

SCALE: 1"= 1'-0"

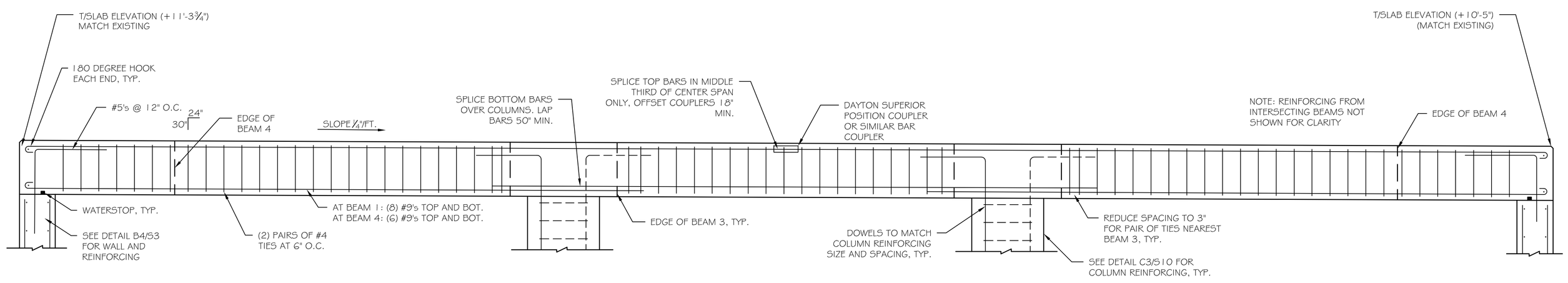


A4 BEAM 1 & 2 REINFORCING ELEVATION

SCALE: ½"= 1'-0"

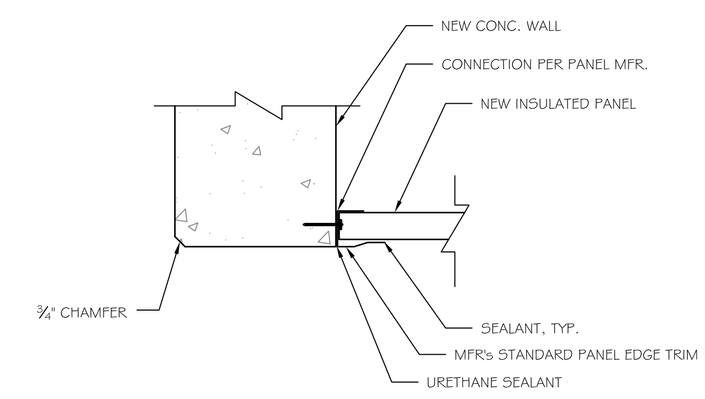


A1 PANEL TO CONC. WALL JOINT DETAIL

SCALE: 1½"= 1'-0"

STATE OF MAINE AARON S. WILSON No. 13429 LICENSED PROFESSIONAL ENGINEER

ASSOCIATED DESIGN PARTNERS INC.
80 Leighton Road
Falmouth, Maine 04105
Office: (207) 878-1751
Fax: (207) 878-1788
E-Mail: adp@adpengineering.com

THIS DRAWING, DESIGN AND ELECTRONIC FILE ARE THE PROPERTY OF ASSOCIATED DESIGN PARTNERS, INC. THE REPRODUCTION, COPYING OR ANY OTHER USE OF THIS DOCUMENT WITHOUT WRITTEN CONSENT IS PROHIBITED.

PROJECT: ALLAGASH BREWERY
FERMENTATION SUPPORT STRUCTURE
FOR: ALLAGASH BREWING CO, 50 INDUSTRIAL WAY, PORTLAND ME

SHEET TITLE: STRUCTURAL DETAILS
ISSUED FOR PERMITTING

REVISIONS

| No. | BY | DESCRIPTION | DATE |
|---|---|---|---|
| 1 | ASW | ADDENDUM #1 | 8/25/12 |
| 2 | | | |
| 3 | | | |
| 4 | | | |

DATE : 9-17-12
SCALE : AS NOTED
DESIGN BY: ASW
DRAWN BY: RSC
FILE #: 12160-S1
PROJECT NUMBER: 12248
SHEET NO: S11