TrueAlert™ NON-ADDRESSABLE MULTI-CANDELA SPEAKER/VISIBLE NOTIFICATION APPLIANCE (CEILING MOUNT)

PRODUCT INFORMATION

FEATURES:

- UL LISTED TO STANDARD 1971 & 1480
- ADA COMPATIBLE

SYNCHRONIZATION FLASH RATE MODE FOR USE WITH:

- SYNCHRONIZATION MODULES FOR CLASS B (STYLE Y) OR CLASS A (STYLE Z) OPERATION

*CURRENT DRAWS REFLECT STROBE FLASHING

MODEL NUMBER	HOUSING COLOR	LETTERING	STROBE RATING	RMS CURRENT @ 16 VRMS	18 VRMS	24 VRMS
4906-9154	WHITE	RED	15cd	75mA	67mA	50mA
			30cd	125mA	111mA	83mA
			75cd	233mA	207mA	155mA
			110cd	316mA	281mA	211mA

SPEAKER dBA AT 10' (RATED WATTS)	1/4	1/2	1	2
REVERBERATE CHAMBER UL 464 TEST	76 dBA	79 dBA	82 dBA	85 dBA
ANECHOIC CHAMBER	87 dBA	90 dBA	93 dBA	96 dBA

SPECIFICATIONS:

- SPEAKER HOUSING DIMENSIONS: 7 1/2" DIA X 1/2"D (191MM X 13MM)
- STROBE LENS PROTRUSION DIMENSION: 2 5/8" (67MM) ABOVE SPEAKER HOUSING
- DEPTH INTO BOX 2 3/4" (70MM)
- TEMPERATURE RANGE: 32°F TO 122°F (0 TO 50°C)
- HUMIDITY RANGE: 10% TO 93% NON-CONDENSING AT 100°F (38°C)
- TERMINAL BLOCKS FOR 18AWG TO 12AWG; TWO WIRES PER TERMINAL FOR IN/OUT WIRING.

WIRING:

1. NOTIFICATION APPLIANCES ARE RATED PER INDIVIDUAL NAMEPLATE LABEL.
2. MAINTAIN CORRECT POLARITY ON TERMINAL CONNECTIONS. DO NOT LOOP WIRES UNDER TERMINALS.
3. ALL NAC WIRING CONNECTIONS ARE SUPERVISED AND POWER-LIMITED.
4. SEE INSTALLATION INSTRUCTIONS (579-548) FOR ADDITIONAL INFORMATION.

STROBE:

- RATED VOLTAGE RANGE: UL LISTED: 16 VDC TO 33 VDC
  ULC LISTED: 20 VDC TO 30 VDC PER ULC S526-M878
- FLASH RATE: 1Hz
- SYNCHRONIZED MODE NAC LOADING: MAXIMUM OF 35 SYNCHRONIZED STROBES PER NAC CIRCUIT.

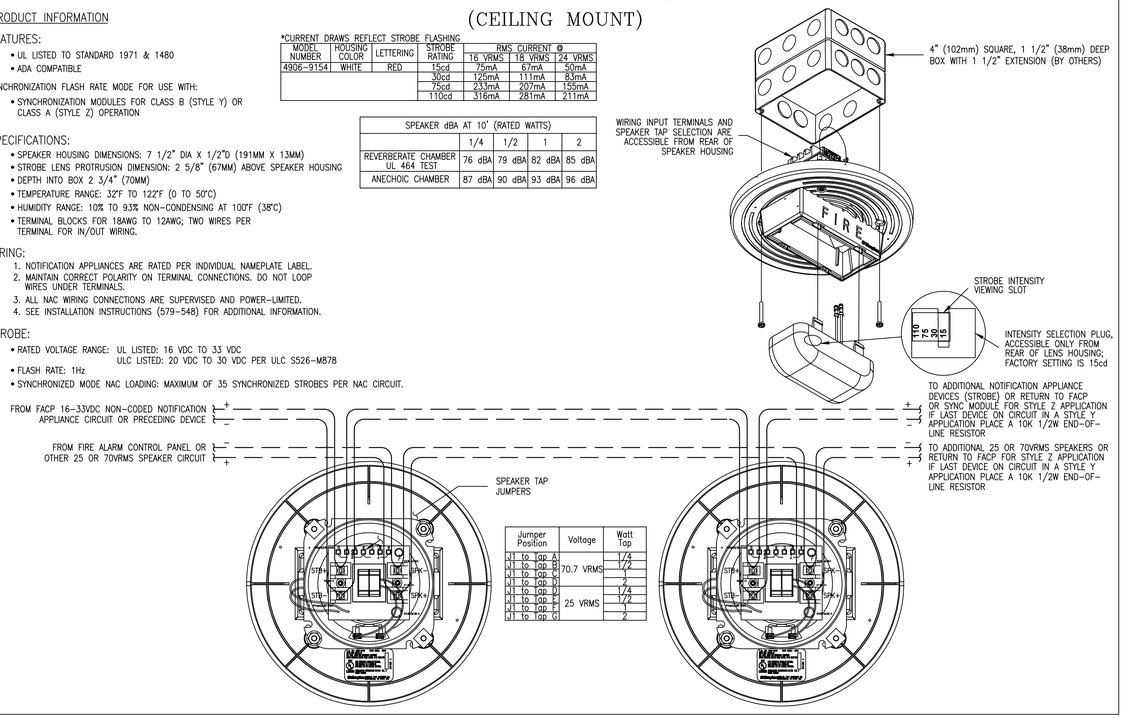

Jumper Position	Voltage	Watt Tap
J1 to Tap A	70.7 VRMS	1/4
J1 to Tap B		1/2
J1 to Tap C		1
J1 to Tap D		2
J1 to Tap 1	25 VRMS	1/4
J1 to Tap 2		1/2
J1 to Tap 3		1
J1 to Tap 4		2

tyco SimplexGrinnell

Safer. Smarter. Tyco.™

DISTRICT - 147
30 THOMAS DRIVE
WESTBROOK, ME 04092
SERVICE: 207-842-8440
PHONE: 207-842-8440
FAX: 207-842-8439

SPARE TIME RECREATION-LASER TAG AMUSEMENT

SPARE TIME RECREATION-LASER TAG AMUSEMENT
867 RIVERSIDE STREET
PORTLAND, MAINE 04103-1070

ISSUE LOG

MARK	DATE	CAD	CHK	DESCRIPTION
1	9/15/15	MD	SK	REVISED PER ADDITION OF MAINTENANCE SHED

Revisions shown with △ symbol

DRAWN BY:	MD
CHECKED BY:	SK
ISSUE DATE:	8/12/15
JOB #:	
PROJECT #:	147:985922501

SIMPLEXGRINNELL © 2015

SYSTEM:
FIRE ALARM SYSTEM

SHEET:
WIRING TYPICALS

FA-703

IMPORTANT NOTICE TO USER: The reproducing or copying this drawing in whole or in part or the information contained herein, in any manner, is a violation of copyright laws. The electronic information in this drawing may be subject to inaccuracies or unauthorized alterations. Any use, reuse, copying, modification or alteration of the information contained herein shall be at the sole risk of the user. This information may not be sold or transferred to any third party, used on other projects or additions to this project for which it was prepared, or used for completion of this project by any third party. SimplexGrinnell disclaims all liability for the use or reuse of altered files by the user or any third party and such use will be a user's sole risk. User shall, to the fullest extent permitted by law, defend, indemnify, and hold SimplexGrinnell harmless from any and all claims for loss, damage or injury arising directly or indirectly therefrom.