Luminaire
Lighting Corporation

FIXTURE TYPE:_____

WALL MOUNT
1 or 2 PLC 13/18/26
1 PLT 32/42

VANDAL RESIS
FLUORES
YOVH 1

Reviewed for Code Compliance
Inspections Division
Approved with Conditions
Date: 12/31/14

SPECIFICATIONS

Housing One piece injection molded UV stabilized polycarbonate secured to baseplate with (2) stainless steel TORX® head screws and sealed against moisture and contaminents with two high temperature silicone O-rings. Color is molded through entire part for scratch resistant finish.

Lens One piece injection molded UV stabilized prismatic polycarbonate with minimum 1/8" wall thickness. Available in clear or opal and secured to baseplate by housing and silicone O-rings.

Reflector Die formed heavy gauge specular aluminum, shaped for maximum efficiency.

Baseplate Pressure die cast marine grade aluminum. Chemically primed and finished with electrostatically applied polyester powder coat.

Socket High temperature thermo plastic, precision snap locked to specular reflector bracket for easy interchangeability.

Ballast Electronic microprocessor controlled high-frequency class P high power factor ballast. Ballast shall have less than 10% total harmonic distortion.

Gasket Closed cell die cut neoprene gasket provided between fixture baseplate and mounting surface.

UL Listing Wet location, 595.

OPTIONS

EMB Emergency battery pack. Will operate one lamp for a minimum of 90 minutes. Self contained within fixture. CAB is required and included.

CAB Cast aluminum backbox. Provided with (5) 1/2" i.p.t. holes for conduit entry and 4 threaded plugs. Chemically primed and finished with electrostatically applied polyester powder coat.

PC Button type photoelectric switch. Requires CAB option.

GLR Fuse and fuse holder.

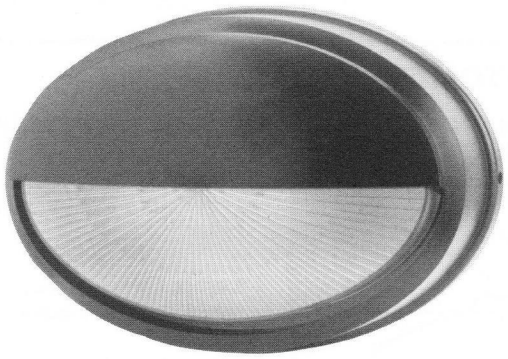

ADA Compliant

OVERALL DIMENSIONS:

Front View

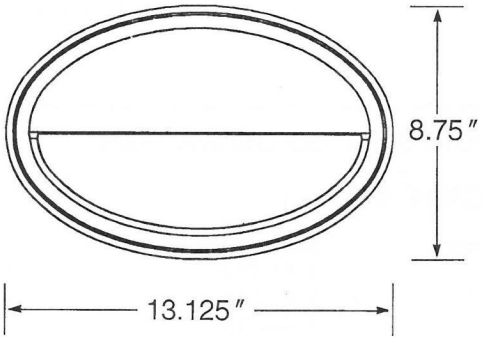

Side View

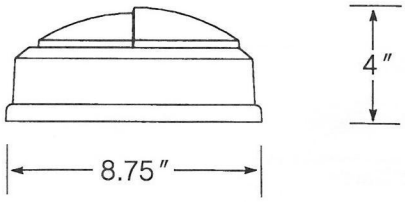

Patent Pending

Luminaire
Lighting Corporation
www.luminairelighting.com
7 Olsen Avenue ■ P.O. Box 2104 ■ Edison, New Jersey 08818 ■ Telephone (732) 549-0056 ■ FAX (732) 549-9737