Reviewed for Code Compliance
Inspections Division
Approved with Conditions

Date: 12/31/14

1. THE SOIL FILTER MUST BE AT LEAST 12 INCHES DEEP AND MUST EXTEND ACROSS THE BOTTOM OF THE ENTIRE FILTER AREA AND UP THE SIDES TO THE DEPTH OR ELEVATION SPECIFIED. THIS SOIL MIXTURE SHALL BE A UNIFORM MIX, FREE OF STONES, STUMPS, ROOTS, OR OTHER SIMILAR OBJECTS LARGER THAN TWO INCHES. NO OTHER MATERIALS OR SUBSTANCES THAT MAY BE HARMFUL TO PLANT GROWTH, OR PROVE A HINDRANCE TO THE PLANTING OR MAINTENANCE OPERATIONS CAN BE MIXED WITHIN THE FILTER. THE RESULTANT MIXTURE SHOULD HAVE MINIMAL CLAY CONTENT WITH NO LESS THAN 8% FINES PASSING THE #200 SIEVE. DURING CONSTRUCTION, CARE SHOULD BE TAKEN TO AVOID COMPACTION OF BOTH THE GRAVEL AND SOIL FILTER. COMPACTION SHOULD BE BY SATURATION ONLY, UNLESS SPECIAL LOW COMPACTION EQUIPMENT IS AVAILABLE.

2. CARE SHOULD BE TAKEN, ESPECIALLY IN AREAS WHERE THE PREDOMINANT SOIL AND OVERBURDEN CONTAINS MARINE CLAY, TO BE SURE THAT THE SAND AND TOPSOIL USED IN THE MIXTURE HAVE VERY LITTLE OR NO CLAY CONTENT. USE OF SOILS WITH MORE THAN 2% CLAY CONTENT COULD CAUSE FAILURE OF THE SYSTEM.

3. THE SOIL FILTER MEDIA MUST BE COMPOSED OF A THOROUGHLY BLENDED MIXTURE OF MATERIALS MEETING THE SPECIFICATIONS IN **TABLE B**. ADJUST THE PROPORTIONS BASED ON THE ORGANIC CONTENT AND AMOUNT OF FINES OF EACH COMPONENT. IF THE SAND IS VERY CLEAN OR THE MULCH IS RELATIVELY COARSE, USE MORE MULCH AND LESS SAND WHILE STAYING WITHIN THE ESTABLISHED RANGES. IF THE SAND IS SILTY OR THE MULCH LOAMY, USE MORE SAND AND LESS MULCH.

| TABLE A | | TABLE B | | | TABLE C | |
|---|---|---|---|---|---|---|
| ME DOT SPECIFICATIONS FOR UNDERDRAINS (MDOT #703.22) | | SOIL FILTER MEDIA | | | ME DOT SPECIFICATIONS FOR UNDERDRAINS (MDOT #703.01) | |
| SIEVE SIZE | % BY WEIGHT | FILTER MEDIA | MIXTURE BY VOLUME | SPECIFICATION | SIEVE SIZE | % BY WEIGHT |
| UNDERDRAIN TYPE C | | | | | 3/8" | 100 |
| 1" | 100 | SAND | 70%-80% | MEDOT SPECIFICATION #703.01 FINE AGGREGATE FOR CONCRETE (SEE TABLE C) | #4 | 95-100 |
| 3/4" | 90-100 | | | | #8 | 80-100 |
| 3/8" | 0-75 | | | | #16 | 50-85 |
| #4 | 0-25 | MULCH | 20%-30% | MODERATELY FINE, SHREDDED BARK OR WOOD FIBER MULCH WITH LESS THAN 8%-10% PASSING THE 200 SIEVE | #30 | 25-60 |
| #10 | 0-5 | | | | #60 | 10-30 |
| | | | | | #100 | 2-10 |
| | | | | | #200 | 0-5 |

## 2 SOIL FILTER NOTES

NOT TO SCALE

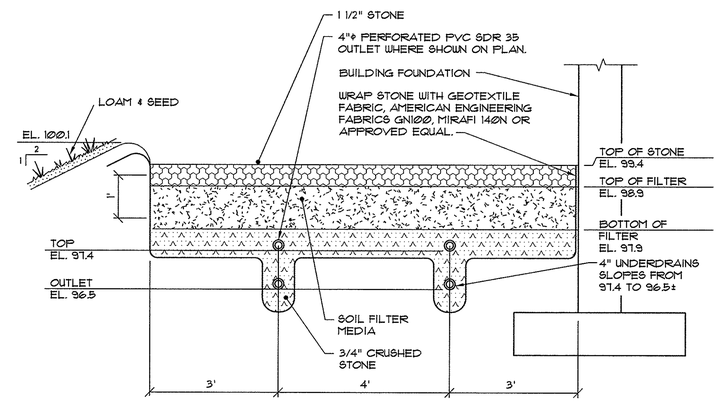


## 3 DRIPSTRIP FILTER

NOT TO SCALE

| CONSTRUCTION | USE |
|---|---|
| 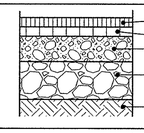 1 1/4" HMA MDOT 9.5mm<br>2 1/4" HMA MDOT 19.0mm<br>4" COMPACTED AGGREGATE BASE, MDOT 703.06(a) TYPE A<br>15" COMPACTED AGGREGATE SUBBASE, MDOT 703.06(b) TYPE D<br>COMPACTED SUBGRADE | BITUMINOUS<br>PARKING LOT |
| 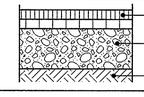 2 - 1" LAYERS OF HMA MDOT 9.5mm<br>12" COMPACTED AGGREGATE BASE, MDOT 703.06(a) TYPE A<br>COMPACTED SUBGRADE | BITUMINOUS<br>SIDEWALKS |

NOTES:
1. HMA = HOT MIX ASPHALT.
   MDOT = MAINE DEPARTMENT OF TRANSPORTATION.
2. ALL COURSE THICKNESS AFTER FINAL COMPACTION.

## 4 SCHEDULE OF SURFACE FINISHES

NOT TO SCALE

## GENERAL NOTES

1. OWNER/DEVELOPER: CLEMENTINA PROPERTIES LLC, 1731 WASHINGTON AVE, PORTLAND MAINE.
2. ENGINEER: PINKHAM & GREER CIVIL ENGINEERS, 28 VANNAH AVEUNE, PORTLAND, MAINE, 04103.
3. ZONE: IM
   PROPOSED USE: CONTRACTOR OFFICE
4. TAX MAP REFERENCE: MAP 325 / LOT B-8-1.
5. TOTAL PARCEL = 0.3466 acres
6. CALL DIG-SAFE PRIOR TO COMMENCING WORK, 1-800-DIG-SAFE.
7. LOT TO BE SERVICED BY PUBLIC WATER AND SEWER.
8. POWER, TELEPHONE AND CABLE ARE TO BE UNDERGROUND.
9. ALL CONSTRUCTION AND SITE ALTERATIONS SHALL BE DONE IN ACCORDANCE WITH THE "MAINE EROSION AND SEDIMENT CONTROL BMPS" PUBLISHED BY THE BUREAU OF LAND AND WATER QUALITY, MAINE DEPARTMENT OF ENVIRONMENTAL PROTECTION, LATEST EDITION, MARCH 2003.

## CITY OF PORTLAND SITE PLAN NOTES

1. LANDSCAPING SHALL MEET THE "ARBORICULTURAL SPECIFICATIONS AND STANDARDS OF PRACTICE AND LANDSCAPE GUIDELINES" OF THE CITY OF PORTLAND TECHNICAL AND DESIGN STANDARDS AND GUIDELINES.
2. THE ENTIRE SITE SHALL BE DEVELOPED AND/OR MAINTAINED AS DEPICTED ON THE SITE PLAN. APPROVAL OF THE PLANNING AUTHORITY OR PLANNING BOARD SHALL BE REQUIRED FOR ANY ALTERATION TO OR DEVIATION FROM THE APPROVED SITE PLAN, INCLUDING, WITHOUT LIMITATION: TOPOGRAPHY, DRAINAGE, LANDSCAPING, RETENTION OF WOODED OR LAWN AREAS, ACCESS, SIZE, LOCATION, AND SURFACING OF PARKING AREAS AND LOCATION AND SIZE OF BUILDINGS.
3. ALL POWERLINE UTILITIES SHALL BE UNDERGROUND.
4. SIDEWALKS AND CURBING SHALL BE DESIGNED AND BUILT WITH TIPDOWN RAMPS AT ALL STREET CORNERS, CROSSWALKS AND DRIVEWAYS IN CONFORMANCE WITH THE CITY OF PORTLAND TECHNICAL AND DESIGN STANDARDS AND GUIDELINES.
5. ALL EROSION CONTROL MEASURES SHALL BE CONSTRUCTED AND MAINTAINED IN ACCORDANCE WITH THE MAINE EROSION AND SEDIMENT CONTROL BMPS PUBLISHED BY THE BUREAU OF LAND AND QUALITY, MAINE DEPARTMENT OF ENVIRONMENTAL PROTECTION, MARCH 2003.
6. ALL EROSION CONTROL MEASURES SHALL BE INSTALLED PRIOR TO ANY SITE EXCAVATION OR REGRADING.
7. ALL DISTURBED AREAS ON THE SITE NOT COVERED BY BUILDINGS OR PAVED AREAS SHALL BE STABILIZED WITH LOAM AND SEED OR OTHER METHODS AS REQUIRED BY BEST MANAGEMENT PRACTICES (SEE ABOVE).
8. PRIOR TO CONSTRUCTION, A PRECONSTRUCTION MEETING SHALL BE HELD AT THE PROJECT SITE WITH THE CONTRACTOR, DEVELOPMENT REVIEW COORDINATOR, PUBLIC WORK'S REPRESENTATIVE AND OWNER TO REVIEW THE CONSTRUCTION SCHEDULE AND CRITICAL ASPECTS OF THE SITE WORK AT THAT TIME, THE SITE/BUILDING CONTRACTOR SHALL PROVIDE THREE (3) COPIES OF A DETAILED CONSTRUCTION SCHEDULE TO THE ATTENDING CITY REPRESENTATIVE. IT SHALL BE THE CONTRACTOR'S RESPONSIBILITY TO ARRANGE A MUTUALLY AGREEABLE TIME FOR THE PRECONSTRUCTION MEETING.
9. EXISTING VEGETATION SHALL BE CONSERVED IN AREAS SHOWN ON THIS SITE. FENCING OR OTHER PROTECTIVE BARRIERS SHALL BE ERECTED OUTSIDE THE DRIP-LINE OF INDIVIDUAL GROUPINGS OF TREES DESIGNATED FOR PRESERVATION PRIOR TO THE ONSET OF CONSTRUCTION. REGRADING SHALL NOT TAKE PLACE WITHIN THE DRIP-LINE OF TREES DESIGNATED FOR PRESERVATION. NO STORAGE OR CONSTRUCTION MATERIALS SHALL BE PERMITTED WITHIN THE DRIP-LINE OF TREES TO BE PRESERVED.

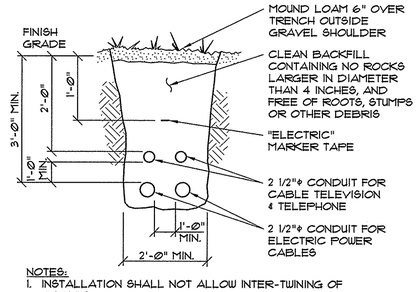


NOTES:
1. INSTALLATION SHALL NOT ALLOW INTER-TWINING OF CABLES.
2. DIRECT BURY ELECTRICAL CABLES MAY BE USED IF ALLOWED BY CENTRAL MAINE POWER.
3. CONFIRM CONDUIT SIZES WITH INDIVIDUAL UTILITY COMPANIES PRIOR TO INTALLATION.
4. COORDINATE FINAL LAYOUT WITH INDIVIDUAL UTILITY COMPANIES.

## 1 CABLE TRENCH SECTION

NOT TO SCALE


PINKHAM & GREER CIVIL ENGINEERS
28 VANNAH AVE., PORTLAND, ME. 04103
TEL: 207.797.2424 FAX: 207.797.4245


STATE OF MAINE
THOMAS S. GREER
No. 4208
LICENSED
PROFESSIONAL ENGINEER

| REV. | DATE | DESCRIPTION |
|---|---|---|
| | | |

CLEMENTINA PROPERTIES LLC
1731 WASHINGTON AVENUE
PORTLAND, MAINE 04103

SCALE: AS SHOWN
DATE: NOVEMBER 19, 2014
PROJECT: 14157
DRN BY: RJS
DESG BY: TSG
CHK BY: TSG

PAPI AND ROMANO BUILDERS
828 RIVERSIDE STREET
PORTLAND, MAINE

DETAILS

C2.2

MAP/LOT 325 / B / 8 / 1