Reviewed for Code Compliance
Inspections Division
Approved with Conditions

Date: 12/31/14

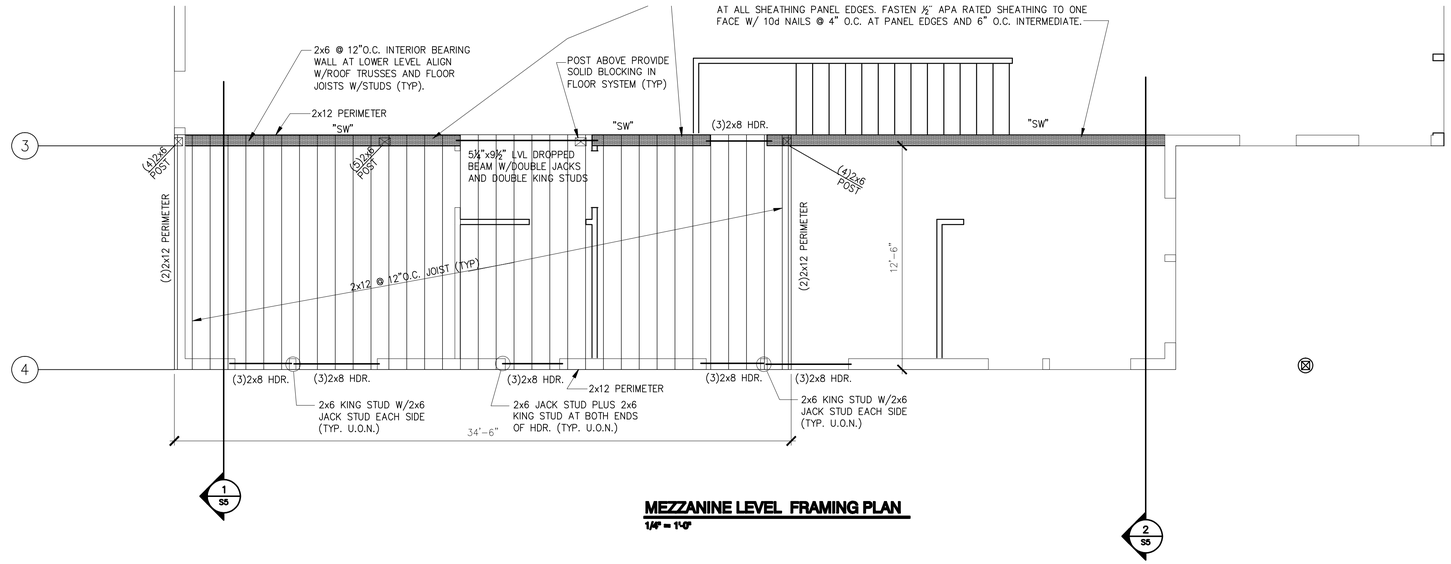

MEZZANINE LEVEL FRAMING PLAN

1/4" = 1'-0"

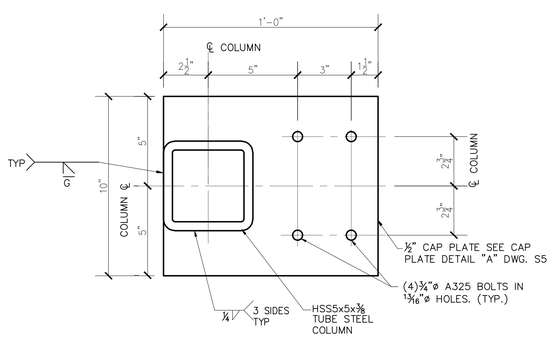

CAP PLATE DETAIL "A"

3" = 1'-0"

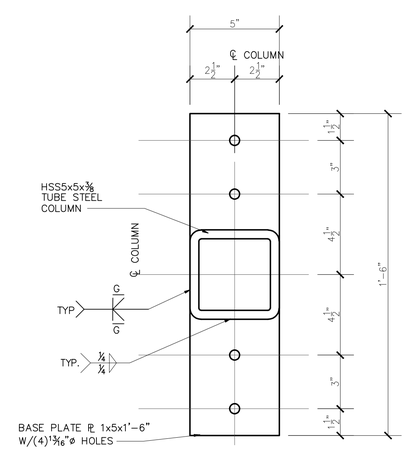

BASE PLATE DETAIL B

3" = 1'-0"

THESE DRAWINGS HAVE BEEN DEVELOPED BY L&L STRUCTURAL ENGINEERING SERVICES, INC. FOR THE TITLED SET ONLY. THE DRAWINGS ARE THE SOLE PROPERTY OF L&L ENGINEERING SERVICES, INC. AND THEY SHALL NOT BE USED, LENT, COPIED OR ALTERED WITHOUT THE WRITTEN CONSENT OF L&L STRUCTURAL ENGINEERING SERVICES, INC.

L & L STRUCTURAL
ENGINEERING SERVICES, INC.
SIX Q STREET
SOUTH PORTLAND, MAINE 04106
PHONE: (207) 767-4830
FAX: (207) 799-5432

STATE OF MAINE
JOSEPH H. LIAGURE
No. 6343
LICENSED
PROFESSIONAL ENGINEER

rev.	date	description	appr'd
A	9-28-10	FOR PRICING ONLY NOT FOR CONSTRUCTION	JHL
B	11-5-10	FOR PERMIT ONLY NOT FOR CONSTRUCTION	JHL

designed by: JHL
drawn by: AKB.
checked by: JHL
scale: AS NOTED
date: 9-27-10
plot date: 11-5-10
project #: 2010-123

ROMANO SHOP
PORTLAND, MAINE

MEZZANINE LEVEL FRAMING PLAN AND DETAILS

S3