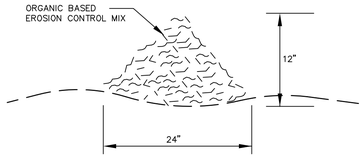

COMPOSITION

EROSION CONTROL MIX SHALL BE MANUFACTURED ON OR OFF THE PROJECT SITE SUCH THAT ITS COMPOSITION IS IN ACCORDANCE WITH THE MDEP MAINE EROSION AND SEDIMENT CONTROL BMP MANUAL, LAST REVISED 3/2003 OR LATER. IT MUST CONSIST PRIMARILY OF ORGANIC MATERIAL, SEPARATED AT THE POINT OF GENERATION, AND MAY INCLUDE: SHREDDED BARK, STUMP GRINDINGS, COMPOSTED BARK, OR ACCEPTABLE MANUFACTURED PRODUCTS. WOOD AND BARK CHIPS, GROUND CONSTRUCTION DEBRIS OR REPROCESSED WOOD PRODUCTS WILL NOT BE ACCEPTABLE AS THE ORGANIC COMPONENT OF THE MIX.

INSTALLATION:

1. THE BARRIER MUST BE PLACED ACROSS THE SLOPE, ALONG THE CONTOUR.
2. EXISTING GROUND SHALL BE PREPARED SUCH THAT THE BARRIER MAY LIE NEARLY FLAT ALONG THE GROUND TO AVOID THE CREATION OF VOIDS AND BRIDGES IN ORDER TO MINIMIZE THE POTENTIAL OF WASH OUTS UNDER THE BARRIER.
3. THE BARRIER SHALL BE A MINIMUM OF 1 FOOT HIGH (AS MEASURED ON THE UPHILL SIDE) AND 2 FEET WIDE FOR SLOPES LESS THAN 5% IN GRADE AND SHALL BE WIDER TO ACCOMMODATE THE ADDITIONAL RUNOFF.
4. EROSION CONTROL MIX CAN BE INSTALLED WHERE SILT FENCE IS ILLUSTRATED ON THE DESIGN PLANS IN AREAS EXCEPT IN, BUT NOT LIMITED TO, THE FOLLOWING AREAS: WETLAND AREAS, AT POINTS OF CONCENTRATED FLOW, BELOW CULVERT OUTLET APRONS, AROUND CATCH BASINS AND CLOSED STORM SYSTEMS AND AT THE BOTTOM OF STEEP SLOPES THAT ARE MORE THAN 50 FEET FROM TOP TO BOTTOM.

EROSION CONTROL MIX BERM

NOT TO SCALE

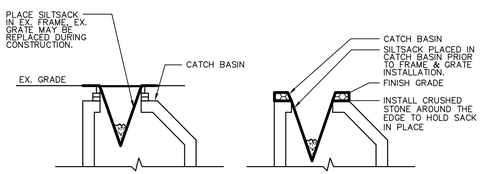

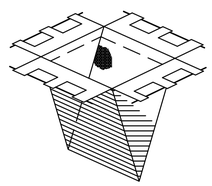

SILT SACK PROTECTION

NOTES:

PRIOR TO FINAL GRADING AND PAVING OPERATIONS BEGIN A CATCH BASIN INSERT (SUCH AS A SILT SACK OR A DANDY BAG ®) MUST BE INSTALLED IN EACH BASIN PER MANUFACTURES INSTRUCTIONS. HAY BALES SHOULD BE REMOVED ONCE INSERTS ARE INSTALLED.

CATCH BASIN PROTECTION DETAIL (FOR PAVED AREAS)

NOT TO SCALE

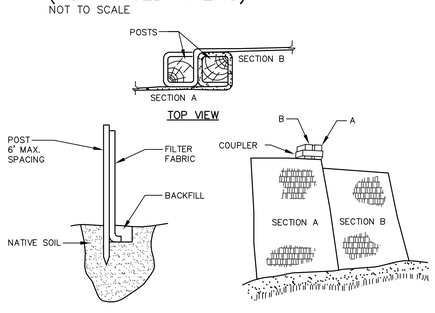

INSTALLATION NOTES:

1. EXCAVATE A 6"x 6" TRENCH ALONG THE LINE OF PLACEMENT FOR THE FILTER BARRIER.
2. UNROLL A SECTION AT A TIME AND POSITION THE POSTS AGAINST THE BACK (DOWNSTREAM) WALL OF THE TRENCH.
3. DRIVE POSTS INTO THE GROUND UNTIL APPROXIMATELY 2" OF FABRIC IS LYING ON THE TRENCH BOTTOM.
4. LAY THE TOE-IN FLAP OF FABRIC ONTO THE UNDISTURBED BOTTOM OF THE TRENCH, BACKFILL THE TRENCH AND TAMP THE SOIL. TOE-IN CAN ALSO BE ACCOMPLISHED BY LAYING THE FABRIC FLAP ON UNDISTURBED GROUND AND PILING AND TAMPING FILL AT THE BASE, BUT MUST BE ACCOMPANIED BY AN INTERCEPTION DITCH.
5. JOIN SECTION AS SHOWN ABOVE.
6. BARRIER SHALL BE MIRAFI SILT FENCE OR EQUAL.

FILTER BARRIER

NOT TO SCALE

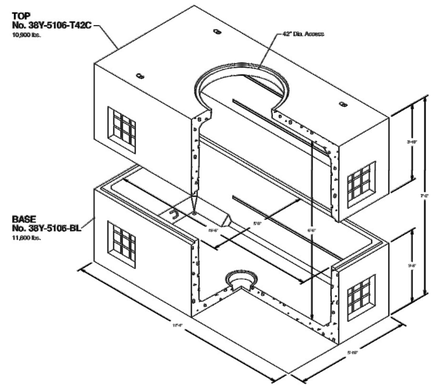

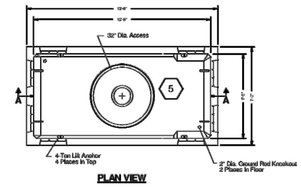

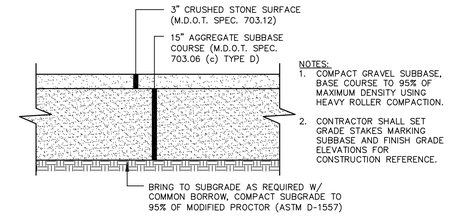

NOTES:

1. COMPACT GRAVEL SUBBASE, BASE COURSE TO 95% OF MAXIMUM DENSITY USING HEAVY ROLLER COMPACTION.
2. CONTRACTOR SHALL SET GRADE STAKES MARKING SUBBASE AND FINISH GRADE ELEVATIONS FOR CONSTRUCTION REFERENCE.

TYPICAL GRAVEL SECTION

NOT TO SCALE

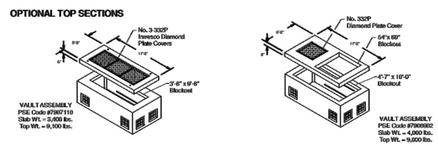

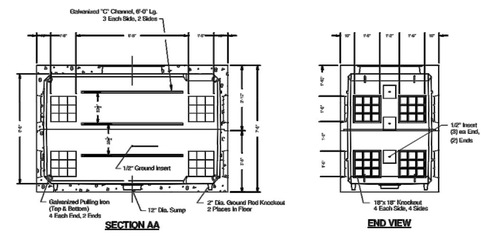

NOTES:

1. 38Y MANHOLE BY OLDCASTLE OR APPROVED EQUAL.
2. INSTALL MIN. 8" OF 3/4" CRUSHED STONE BEDDING.

38Y MANHOLE FOR POWER & TELEPHONE

NOT TO SCALE

General Notes

Concrete Specifications:
1) 4000 psi after 28 days with 4%-6% air
2) Reinforcing is grade 60

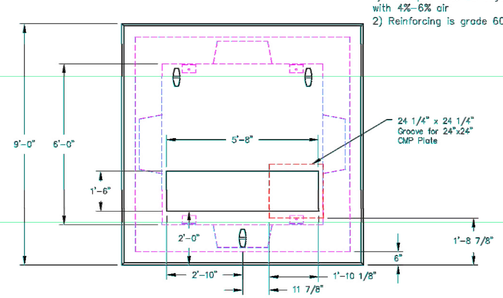

Plan View

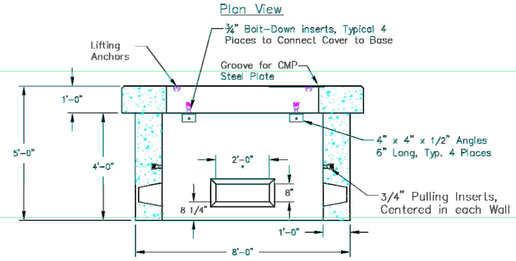

Section View

NOTES:

1. TRANSFORMER BY AMERICAN CONCRETE INDUSTRIES OR APPROVED EQUAL.
2. INSTALL MIN. 8" OF 3/4" CRUSHED STONE BEDDING.

3-PHASE PADMOUNT TRANSFORMER

NOT TO SCALE

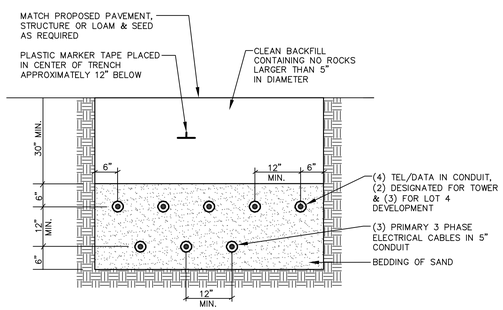

NOTE:

1. CABLES TO BE ENCASED IN SCHEDULE 40 PVC CONDUIT WHEN RUN BENEATH PAVED AREAS.
2. CONTRACTOR TO COORDINATE UTILITY EXTENSION WITH CENTRAL MAINE POWER AND TEL/DATA UTILITY COMPANY.

UNDERGROUND UTILITY EXTENSION FROM RIVERSIDE STREET

NOT TO SCALE

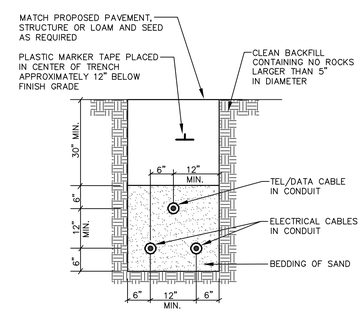

CABLES TO BE ENCASED IN SCHEDULE 40 PVC CONDUIT WHEN RUN BENEATH PAVED AREAS.

SINGLE PHASE POWER TO TOWER

NOT TO SCALE

Reviewed for Code Compliance Inspection Division Approved as Noted

Date: 01/12/17

PLS OR PE

CRAIG A. BURGESS P.E. 12638

STATE OF MAINE CRAIG A. BURGESS No. 12638 PROFESSIONAL ENGINEER

DESIGNED	CHECKED
CAB	CHK BY

REV:	BY:	DATE:	STATUS:
B	CAB	11-08-16	ISSUED TO CLIENT FOR REVIEW
A	CAB	10-21-16	FOR PRELIMINARY REVIEW

THIS PLAN SHALL NOT BE MODIFIED WITHOUT WRITTEN PERMISSION FROM SEBAGO TECHNICS, INC. ANY ALTERATIONS, AUTHORIZED OR OTHERWISE, SHALL BE AT THE USER'S SOLE RISK AND WITHOUT LIABILITY TO SEBAGO TECHNICS, INC.

SEBAGO TECHNICS
WWW.SEBAGOTECHNICS.COM
75 John Roberts Rd. Suite 1A South Portland, ME 04106 Tel: 207-200-2100
250 Goddard Rd. Suite B Lewiston, ME 04240 Tel: 207-783-9656

DETAILS
OF:
RIVERSIDE SUBDIVISION, LOT 4
RIVERSIDE STREET
PORTLAND, MAINE 04103
FOR:
THE CITY OF PORTLAND, MAINE
389 CONGRESS STREET
PORTLAND, MAINE 04101

PROJECT NO.	SCALE
16354	NTS

SHEET 6 OF 6

16354D.dwg, TAB: D2