316 — A — 1

300 - 300 Riverside Street

Hammond Lumber Warehouse

Hammond Lumber Co

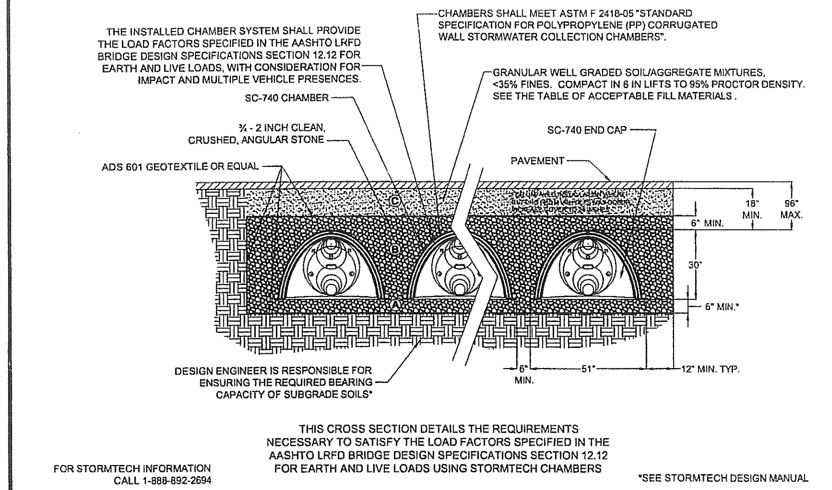

ST 1.0 SC-740 TYPICAL CROSS SECTION

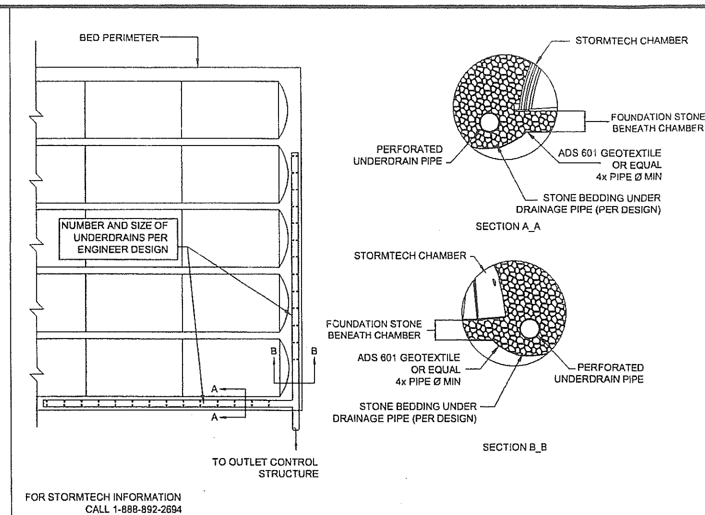

ST 2.0 STORMTECH UNDERDRAIN DETAIL

ACCEPTABLE FILL MATERIALS
STORMTECH SC-740 CHAMBER SYSTEMS

MATERIAL LOCATION	DESCRIPTION	AASHTO M43 DESIGNATION	AASHTO M145 DESIGNATION	COMPACTION/DENSITY REQUIREMENT
FILL MATERIAL FROM 18" TO GRADE ABOVE CHAMBERS	ANY SOIL/ROCK MATERIALS, NATIVE SOILS OR PER ENGINEER'S PLANS. CHECK PLANS FOR PAVEMENT SUBGRADE REQUIREMENTS.	N/A	N/A	PREPARE PER ENGINEER'S PLANS. PAVED INSTALLATIONS MAY HAVE STRINGENT MATERIAL AND PREPARATION REQUIREMENTS.
(C) FILL MATERIAL FOR 6" TO 18" ELEVATION ABOVE CHAMBERS (24" FOR UNPAVED INSTALLATIONS)	GRANULAR WELL-GRADED SOIL/AGGREGATE MIXTURES, <35% FINES.	3, 357, 4, 467, 5, 56, 57, 6, 67, 68, 7, 78, 8, 89, 9, 10	A-1 A-2 A-3	COMPACT IN 6" LIFTS TO A MINIMUM 95% STANDARD PROCTOR DENSITY. ROLLER GROSS VEHICLE WEIGHT NOT TO EXCEED 12,000 LBS. DYNAMIC FORCE NOT TO EXCEED 20,000 LBS.
(B) EMBEDMENT STONE SURROUNDING AND TO A 6" ELEVATION ABOVE CHAMBERS	CLEAN ANGULAR STONE WITH THE MAJORITY OF PARTICLES BETWEEN ¾ - 2 INCH	3, 357, 4, 467, 5, 56, 57	N/A	NO COMPACTION REQUIRED
(A) FOUNDATION STONE BELOW CHAMBERS	CLEAN ANGULAR STONE WITH THE MAJORITY OF PARTICLES BETWEEN ¾ - 2 INCH	3, 357, 4, 467, 5, 56, 57	N/A	PLATE COMPACT OR ROLL TO ACHIEVE A 95% STANDARD PROCTOR DENSITY

PLEASE NOTE: THE LISTED AASHTO DESIGNATIONS ARE FOR GRADATIONS ONLY. THE STONE MUST ALSO BE CLEAN CRUSHED ANGULAR. FOR EXAMPLE, THE STONE MUST BE SPECIFIED AS CLEAN, CRUSHED, ANGULAR NO. 4 STONE.

ST 3.0 STORMTECH ACCEPTABLE FILL MATERIALS

NOTES:
1. ALL DESIGN SPECIFICATIONS FOR STORMTECH CHAMBERS SHALL BE IN ACCORDANCE WITH THE STORMTECH DESIGN MANUAL.
2. THE INSTALLATION OF STORMTECH CHAMBERS SHALL BE IN ACCORDANCE WITH THE LATEST STORMTECH INSTALLATION INSTRUCTIONS.
3. THE CONTRACTOR IS ADVISED TO REVIEW AND UNDERSTAND THE INSTALLATION INSTRUCTIONS PRIOR TO BEGINNING SYSTEM INSTALLATION. CALL **1-888-892-2694** OR VISIT **WWW.STORMTECH.COM** TO RECEIVE A COPY OF THE LATEST STORMTECH INSTALLATION INSTRUCTIONS.
4. CHAMBERS SHALL MEET THE DESIGN REQUIREMENTS AND LOAD FACTORS SPECIFIED IN SECTION 12.12 OF THE LATEST EDITION OF THE AASHTO LRFD BRIDGE DESIGN SPECIFICATIONS.

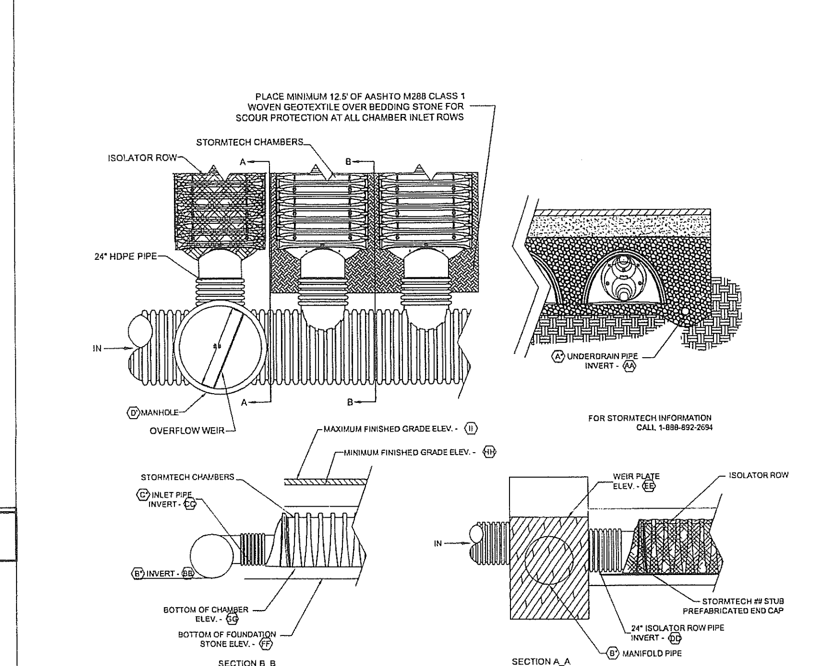

ST 8.0 STORMTECH ELEVATIONS

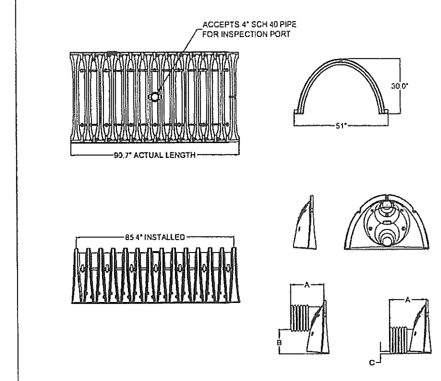

NOMINAL CHAMBER SPECIFICATIONS
SIZE (W x H x INSTALLED LENGTH) - 51.0" x 30.0" x 85.4"
CHAMBER STORAGE - 45.9 CUBIC FEET
MINIMUM INSTALLED STORAGE - 74.9 CUBIC FEET
WEIGHT - 75 LBS.

STUBS AT TOP OF END CAP FOR PARTS NUMBERS ENDING WITH "T"
STUBS AT BOTTOM OF END CAP FOR PARTS NUMBERS ENDING WITH "B"

PART #	CHAMBER	PIPE SIZE	A	B	C
SC740EPE06T	SC-740	6 in (150 mm)	10.90 in (277 mm)	18.50 in (470 mm)	N/A
SC740EPE06B	SC-740	6 in (150 mm)	10.90 in (277 mm)	N/A	0.50 in (13 mm)
SC740EPE08T	SC-740	8 in (200 mm)	12.20 in (310 mm)	16.50 in (419 mm)	N/A
SC740EPE08B	SC-740	8 in (200 mm)	12.20 in (310 mm)	N/A	0.60 in (15 mm)
SC740EPE10T	SC-740	10 in (250 mm)	13.40 in (340 mm)	14.50 in (368 mm)	N/A
SC740EPE10B	SC-740	10 in (250 mm)	13.40 in (340 mm)	N/A	0.70 in (18 mm)
SC740EPE12T	SC-740	12 in (300 mm)	14.70 in (373 mm)	12.50 in (318 mm)	N/A
SC740EPE12B	SC-740	12 in (300 mm)	14.70 in (373 mm)	N/A	1.20 in (30 mm)
SC740EPE15T	SC-740	15 in (375 mm)	18.40 in (467 mm)	9.00 in (229 mm)	N/A
SC740EPE15B	SC-740	15 in (375 mm)	18.40 in (467 mm)	N/A	1.30 in (33 mm)
SC740EPE18T	SC-740	18 in (450 mm)	19.70 in (500 mm)	5.00 in (127 mm)	N/A
SC740EPE18B	SC-740	18 in (450 mm)	19.70 in (500 mm)	N/A	1.60 in (41 mm)
* SC740EPE24B	SC-740	24 in (600 mm)	18.50 in (470 mm)	N/A	0.10 in (3 mm)

NOTE: ALL DIMENSIONS ARE NOMINAL

ALL STUBS, EXCEPT FOR THE SC740EPE24B ARE PLACED AT BOTTOM OF END CAP SUCH THAT THE OUTSIDE DIAMETER OF THE STUB IS FLUSH WITH THE BOTTOM OF THE END CAP. FOR ADDITIONAL INFORMATION CONTACT STORMTECH AT 1-888-892-2694.

* FOR THE SC740EPE24B THE 24" STUB LIES BELOW THE BOTTOM OF THE END CAP APPROXIMATELY 1.75". BACKFILL MATERIAL SHOULD BE REMOVED FROM BELOW THE N-12 STUB SO THAT THE FITTING SETS LEVEL.

ST 9.0 TECHNICAL DETAILS

SYM.	DESCRIPTION	1P (IN)	1P (OUT)	U1A	U1B	U2
A'	SIZE OF UNDERDRAIN (INCHES)	6"	6"	6"	4"	6"
AA	INVERT OF UNDERDRAIN	43.50	43.50	43.50	-	43.00
B'	SIZE OF MANIFOLD (INCHES)	24"	24"	-	-	-
BB	INVERT OF MANIFOLD	43.36	43.36	-	-	-
C'	SIZE OF INLET PIPE (INCHES)	15"	15"	-	-	-
CC	INVERT OF INLET PIPE	44.11	44.11	-	-	-
D'	SIZE OF MANHOLE (FEET)	5'	5'	4'	4'	5'
DD	INVERT 24" PIPE TO ISOLATOR ROW	44.01	44.01	44.01	63.83	43.51
EE	WEIR PLATE ELEVATION	46.50	46.50	46.50	65.00	47.50
FF	BOTTOM OF STONE ELEVATION	43.50	43.50	43.50	63.25	43.00
GG	BOTTOM OF CHAMBER ELEVATION	44.00	44.00	44.00	63.75	43.50
HH	MINIMUM COVER (18" FROM TOP OF CHAMBER TO BASE OF PAVEMENT / 24" IF UNPAVED)	49.08	49.58	48.83	68.58	49.08
II	MAXIMUM COVER (96" FROM TOP OF CHAMBER TO FINISHED GRADE)	50.25	52.50	49.75	69.50	50.50

ST 11.0 STORMTECH ELEVATIONS

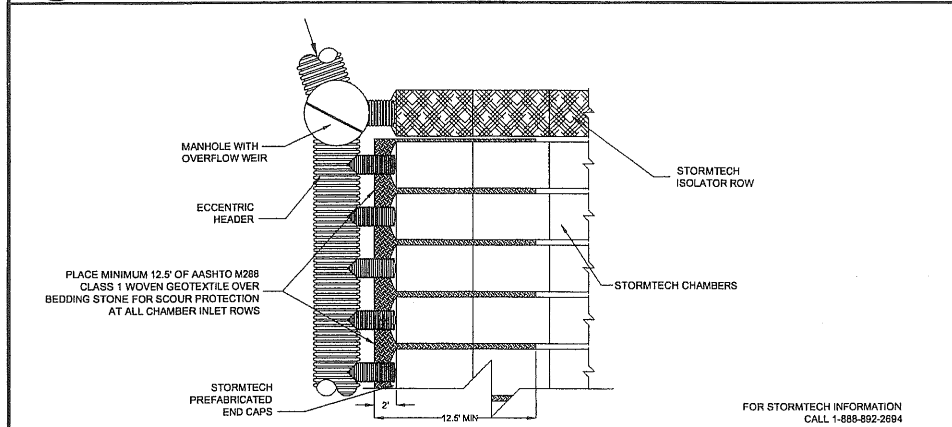

ST 4.0 STORMTECH ISOLATOR™ ROW MANIFOLD DETAIL

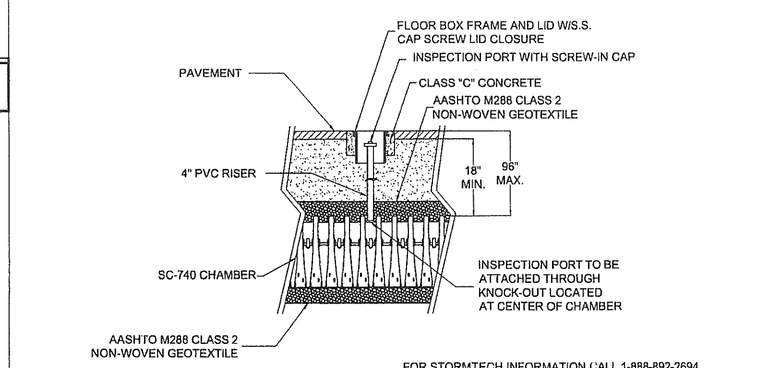

ST 5.0 STORMTECH INSPECTION PORT DETAIL

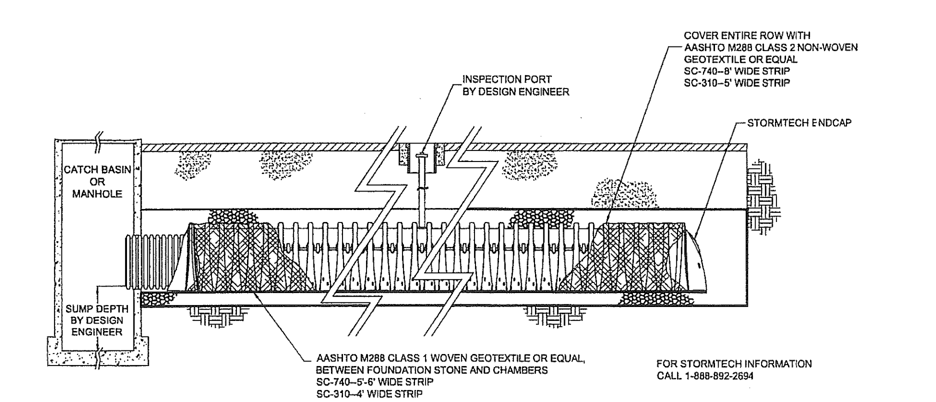

ST 6.0 STORMTECH ISOLATOR™ ROW DETAIL

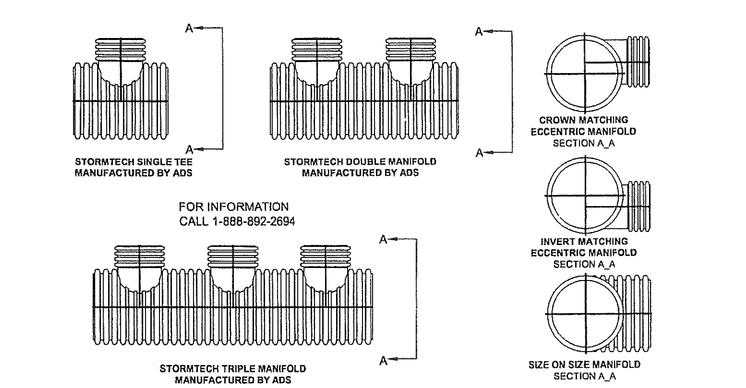

STUB SIZE	HEADER PIPE SIZES									
	48"	42"	36"	30"	24"	18"	15"	12"	10"	8"
24"	AVAIL	AVAIL	AVAIL	AVAIL	AVAIL	-	-	-	-	-
18"	AVAIL	AVAIL	AVAIL	AVAIL	AVAIL	AVAIL	-	-	-	-
15"	AVAIL	AVAIL	AVAIL	AVAIL	AVAIL	AVAIL	AVAIL	-	-	-
12"	AVAIL	AVAIL	AVAIL	AVAIL	AVAIL	AVAIL	AVAIL	AVAIL	-	-
10"	-	-	-	-	AVAIL	AVAIL	AVAIL	AVAIL	AVAIL	-
8"	-	-	-	-	AVAIL	AVAIL	AVAIL	AVAIL	AVAIL	AVAIL
6"	-	-	-	AVAIL	AVAIL	AVAIL	AVAIL	AVAIL	AVAIL	AVAIL

AVAIL - STANDARD HEADERS AVAILABLE

MANIFOLDS ARE DESIGNED TO BE COUPLED TO STORMTECH PREFABRICATED END CAPS. WHEN USING STANDARD END CAPS, CORRUGATED PIPE UP TO 18 INCHES CAN BE INSERTED DIRECTLY INTO THE END CAP. FOR 24" INLET PIPES, A CORRUGATED TO SMOOTH PIPE ADAPTER IS REQUIRED.

ST 7.0 ADS MANIFOLD DETAILS

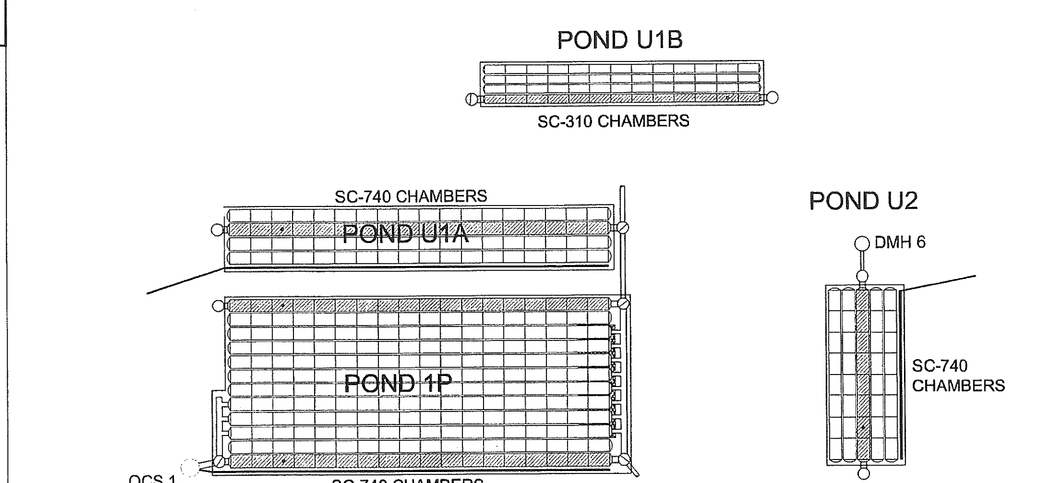

CHAMBERS SHALL MEET THE DESIGN REQUIREMENTS AND LOAD FACTORS SPECIFIED IN SECTION 12.12 OF THE LATEST EDITION OF THE AASHTO LRFD BRIDGE DESIGN SPECIFICATIONS LOADS SHALL BE CALCULATED IN ACCORDANCE WITH SECTION 3 AND SHALL INCLUDE H20 DESIGN TRUCK, IMPACT FACTOR, MULTIPLE PRESENCE, AND LANE LOAD.

ST 10.0 STORMTECH SC-310 & SC-740 CHAMBER LAYOUT

AH 23i

REV:	BY:	DATE:	STATUS:
D	JRS	5/15/07	ISSUED FOR FINAL APPROVAL
C	JRS	4-19-07	REVISED PER MDEP STORMWATER REVIEW COMMENTS
B	JRS	11-13-06	ISSUED FOR SITE PLAN REVIEW
A	JRS	10-20-06	ISSUED FOR MDEP SUBMITTAL

THIS PLAN SHALL NOT BE MODIFIED WITHOUT WRITTEN PERMISSION FROM SEBAGO TECHNICS, INC. ANY ALTERATIONS, AUTHORIZED OR OTHERWISE, SHALL BE AT THE USER'S SOLE RISK AND WITHOUT LIABILITY TO SEBAGO TECHNICS, INC.

Sebago Technics
Engineering Expertise You Can Build On
One Chabot Street
Westbrook, Me 04098-1339
Tel (207) 856-0277

PROJECT NO.	FIELD BOOK	DESIGN	CHKD	DRAWN
05353	778	JRS	JRS	-

StormTech® Subsurface Stormwater Management™

DETAILS
OF: MJH-PORT LLC PARCEL
300 RIVERSIDE STREET
PORTLAND, ME
FOR: HAMMOND LUMBER COMPANY
P.O. BOX 500
BELGRADE, ME 04917

DATE	SCALE
2-14-06	N.T.S

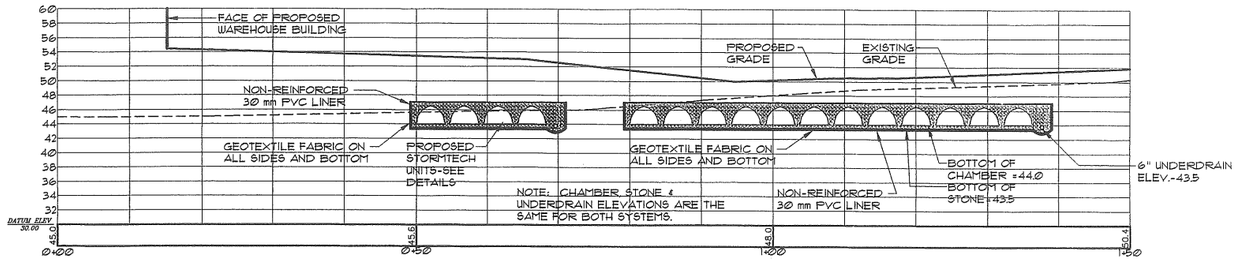

SECTION: SYSTEM 1P & U1A (A-A')

SCALE: 1"=10' HORIZ.
1"=10' VERT.

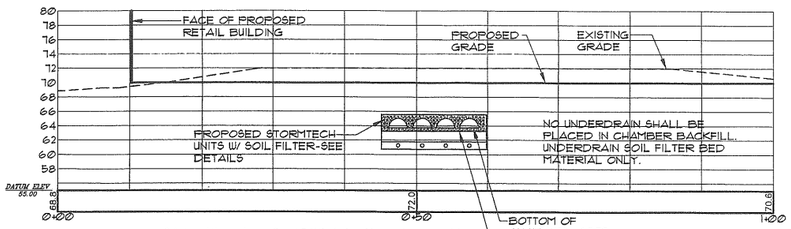

SECTION: SYSTEM U1B (B-B')

SCALE: 1"=10' HORIZ.
1"=10' VERT.

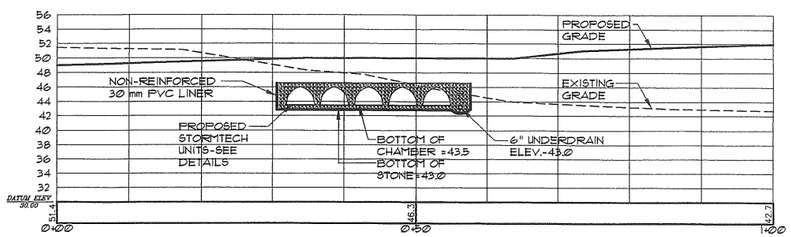

SECTION: SYSTEM U2 (C-C')

SCALE: 1"=10' HORIZ.
1"=10' VERT.

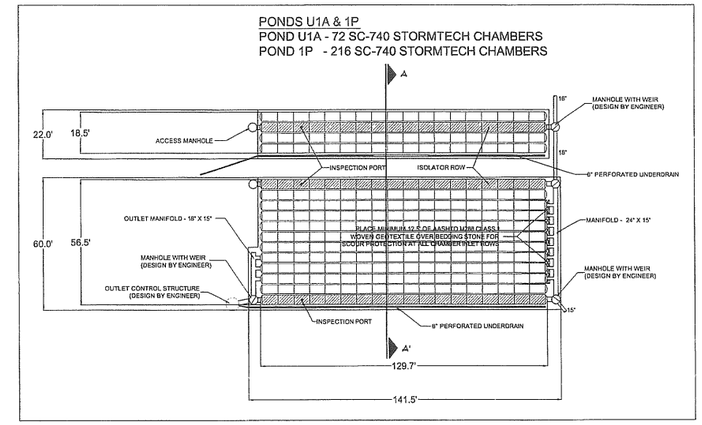

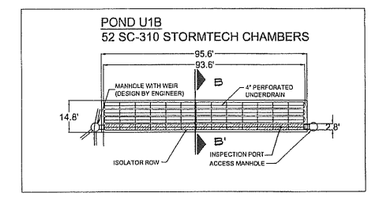

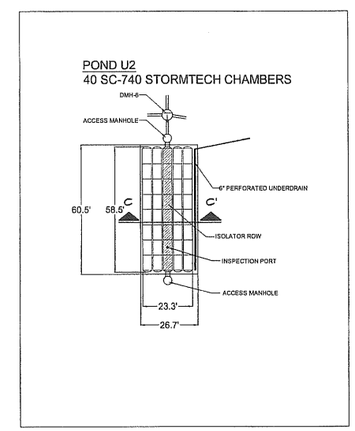

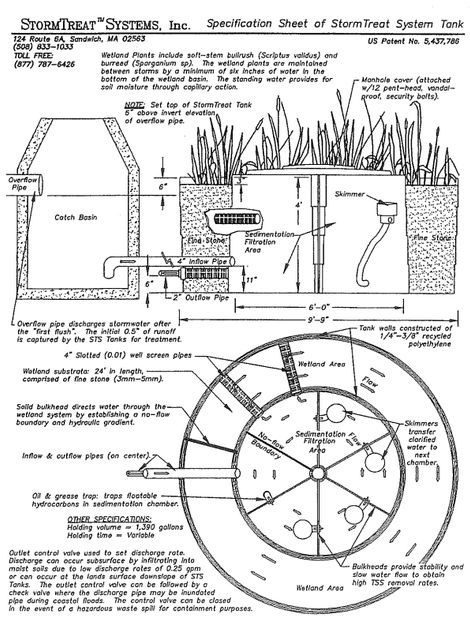

	POND U1A	POND U2
NO. OF UNITS	5	3
BASE ELEV.	42.00	41.50
INV. IN (4")	42.92	42.42
INV. OUT (2")	42.50	42.00

Att. 23j

STATE OF MAINE JAMES R. SEYMOUR No. 9997 LICENSED PROFESSIONAL ENGINEER 3-5-07

REV:	BY:	DATE:	STATUS:
A	JRS	10-20-06	ISSUED FOR MDEP SUBMITTAL
B	JRS	11-13-06	ISSUED FOR SITE PLAN REVIEW
C	JRS	4-19-07	REVISED PER MDEP STORMWATER REVIEW COMMENTS
D	JRS	5/15/07	ISSUED FOR FINAL APPROVAL

THIS PLAN SHALL NOT BE MODIFIED WITHOUT WRITTEN PERMISSION FROM SEBAGO TECHNICS, INC. ANY ALTERATIONS, AUTHORIZED OR OTHERWISE, SHALL BE AT THE USER'S SOLE RISK AND WITHOUT LIABILITY TO SEBAGO TECHNICS, INC.

Sebago Technics
Engineering Expertise You Can Build On
Westbrook, Maine Office
Westbrook, Me 04098-1339
Tel (207) 856-0277

PROJECT NO.	FIELD BOOK	DESIGN	CHKD	DRAWN
05353	778	JRS	JRS	BCM

StormTech® Exfiltration • Retention • Recharge
Subsurface Stormwater Management™

DETAILS
OF:
MJH-PORT LLC PARCEL
300 RIVERSIDE STREET
PORTLAND, ME
FOR:
HAMMOND LUMBER COMPANY
P.O. BOX 500
BELGRADE, ME 04917

DATE	SCALE
2-14-06	N.T.S

SHEET 10 OF 16

05353D-ST.dwg, TAB:STD10

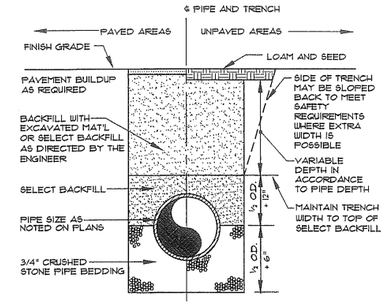

TYPICAL TRENCH SECTION
NOT TO SCALE

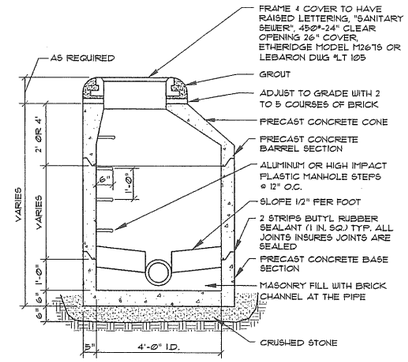

NOTE: PIPE CONNECTIONS SHALL BE WATERTIGHT FLEXIBLE BOOT CONNECTORS PROVIDES LEAKPROOF CONNECTION

PRECAST MANHOLE
NOT TO SCALE

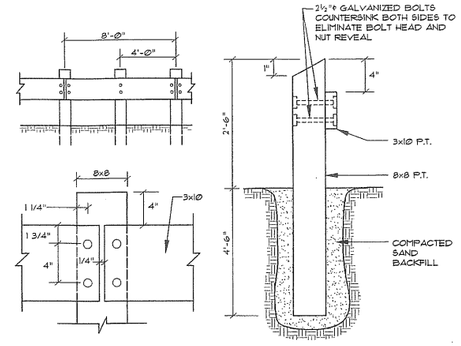

PRESSURE TREATED WOOD GUARDRAIL
NOT TO SCALE

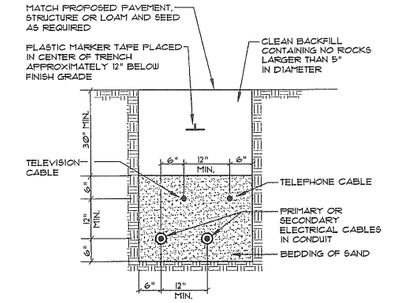

CABLES TO BE ENCASED IN SCHEDULE 40 PVC CONDUIT WHEN RUN BENEATH PAVED AREAS.

TYPICAL UNDERGROUND CABLE INSTALLATION
NOT TO SCALE

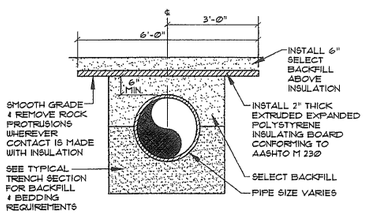

PIPE INSULATION DETAIL
NOT TO SCALE

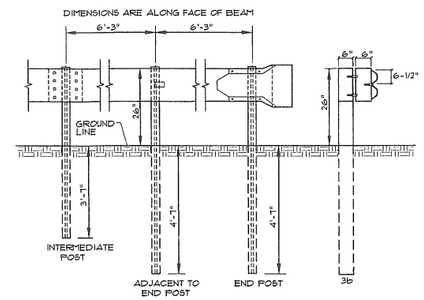

NOTES:
1. INTERMEDIATE POST SPACING SHALL BE 6'-3" UNLESS OTHERWISE SHOWN.
2. POSTS AND OFFSET BRACKETS FOR TYPE 3b GUARD RAIL SHALL BE W 6x9.
3. ALL HOLES IN BEAM TO BE SHOP-PUNCHED BEFORE GALVANIZING.

GUARDRAIL TYPE 3b
NOT TO SCALE

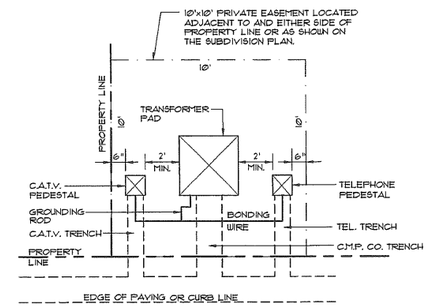

NOTE:
TRANSFORMER PAD AND COVER TO BE FIBERGLASS MEETING CENTRAL MAINE POWER SPECIFICATIONS.

TRANSFORMER DETAIL
NOT TO SCALE

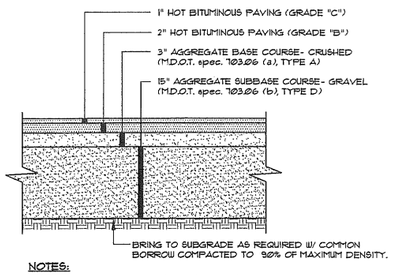

NOTES:
1. COMPACT GRAVEL SUBBASE, BASE COURSE TO 92% OF MAXIMUM DENSITY USING HEAVY ROLLER COMPACTION.
2. CONTRACTOR SHALL SET GRADE STAKES MARKING SUBBASE AND FINISH GRADE ELEVATIONS FOR CONSTRUCTION REFERENCE.

TYP. PAVED PARKING LOT SECTION RETAIL STORE
NOT TO SCALE

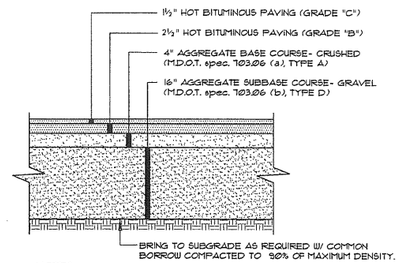

NOTES:
1. COMPACT GRAVEL SUBBASE, BASE COURSE TO 92% OF MAXIMUM DENSITY USING HEAVY ROLLER COMPACTION.
2. CONTRACTOR SHALL SET GRADE STAKES MARKING SUBBASE AND FINISH GRADE ELEVATIONS FOR CONSTRUCTION REFERENCE.

HEAVY DUTY BITUMINOUS PAVEMENT WAREHOUSE & ACCESS DRIVES
NOT TO SCALE

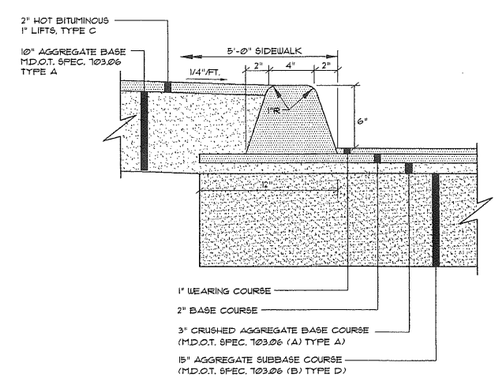

BITUMINOUS CURB / SIDEWALK SECTION
NOT TO SCALE

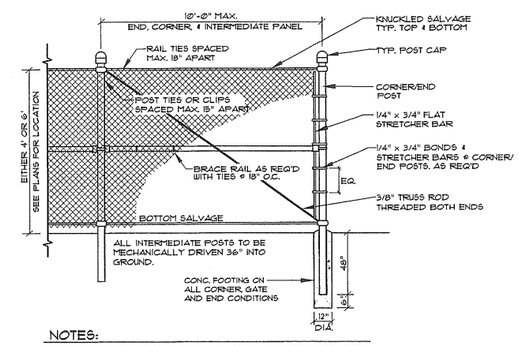

NOTES:
1. CORNER OR END POST: NOMINAL 3" O.D. GALVANIZED STEEL PIPE, MIN. 5.79 lbs/LF.
2. INTERMEDIATE POST: NOMINAL 2-1/2" O.D. GALVANIZED STEEL PIPE, MIN. 3.65 lbs/LF.
3. BRACES (TOP & BOTTOM): NOMINAL 1-5/8" O.D. GALVANIZED STEEL PIPE, MIN. 2.27 lbs/LF.
4. THE OUTSIDE OF THE FENCE FABRIC SHALL BE 3" INSIDE THE EDGE OF PAVEMENT.
5. BRACE RAIL AND DIAGONAL BRACE ROD SHALL BE INSTALLED AT EACH 10' CORNER SECTION OF ENCLOSURE.
6. CONCRETE SHALL HAVE MINIMUM COMPRESSIVE STRENGTH (f_c) OF 3,000 psi WITH 6% AIR ENTRAINMENT.
7. SUBMIT SHOP DRAWINGS FOR OWNER'S/ENGINEER'S APPROVAL.
8. FENCE FABRIC, POST, RAILS AND APPURTENANCES SHALL BE VINYL CLAD: COLOR: BLACK

TYPICAL CHAIN LINK FENCE
NOT TO SCALE

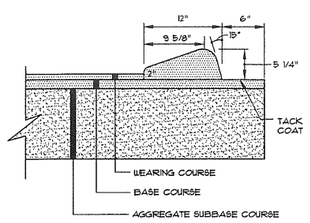

CAPE COD CURB
NOT TO SCALE

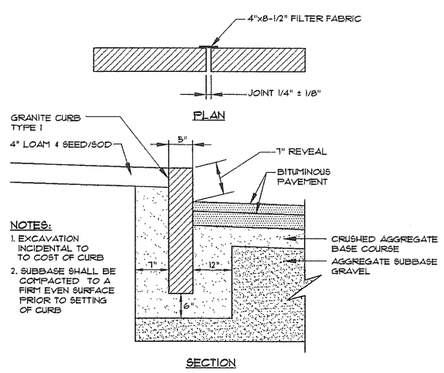

NOTES:
1. EXCAVATION INCIDENTAL TO TO COST OF CURB
2. SUBBASE SHALL BE COMPACTED TO A FIRM EVEN SURFACE PRIOR TO SETTING OF CURB

VERTICAL GRANITE CURB
NOT TO SCALE

Att 23 K

STATE OF MAINE JAMES R. SEYMOUR JR. 5/15/07 PROFESSIONAL ENGINEER

REV:	BY:	DATE:	STATUS:
C	JRS	5/15/07	ISSUED FOR FINAL APPROVAL
B	JRS	11-13-06	ISSUED FOR SITE PLAN REVIEW
A	JRS	10-20-06	ISSUED FOR MDEP SUBMITTAL

THIS PLAN SHALL NOT BE MODIFIED WITHOUT WRITTEN PERMISSION FROM SEBAGO TECHNICS, INC. ANY ALTERATIONS, AUTHORIZED OR OTHERWISE, SHALL BE AT THE USER'S SOLE RISK AND WITHOUT LIABILITY TO SEBAGO TECHNICS, INC.

Sebago Technics
Engineering Expertise You Can Build On
One Chabot Street
Westbrook, Maine 04092-1339
Tel (207) 856-0277

PROJECT NO.	FIELD BOOK	DESIGN	CHKD	DRAWN
05353	778	JRS	JRS	PMM

SITE DETAILS
OF:
MJH-PORT LLC PARCEL
300 RIVERSIDE STREET
PORTLAND, ME
FOR:
HAMMOND LUMBER COMPANY
P.O. BOX 500
BELGRADE, ME 04917

DATE	SCALE
2-14-06	N.T.S

SHEET 11 OF 16

05353D.dwg, TAB:D11