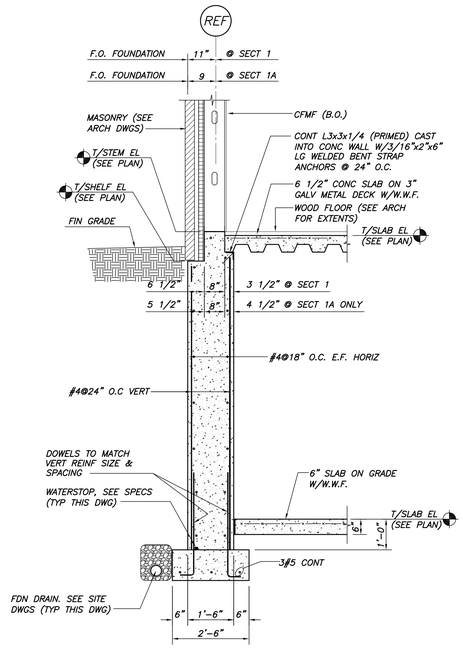

SECTION 1 S1.1,S1.2 1A S1.1,S1.2
1/2"=1'-0"

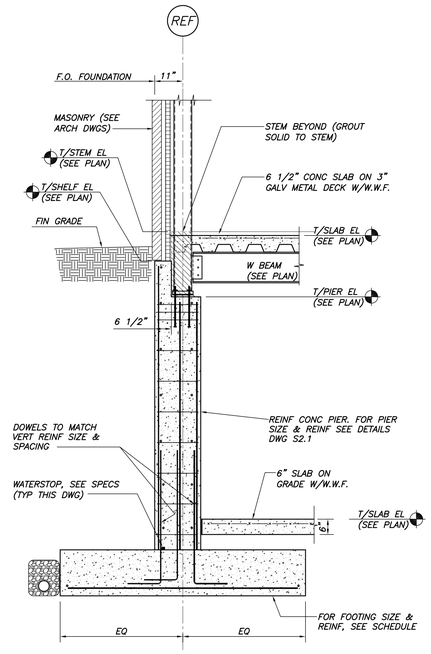

SECTION 2 S1.1,S1.2
1/2"=1'-0"

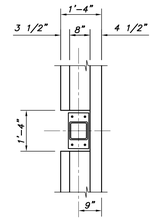

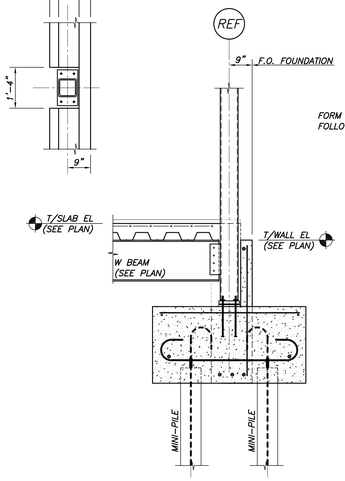

SECTION 3 S1.1,S1.2
1/2"=1'-0"

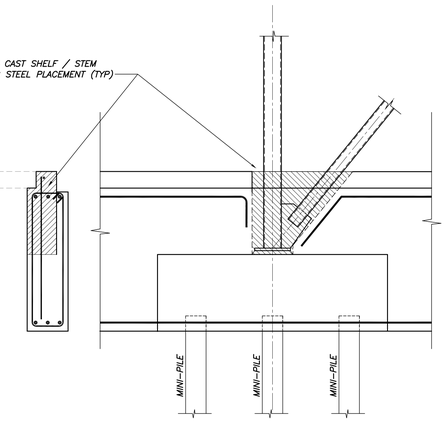

SECTION 4 S1.1,S1.2
1/2"=1'-0"

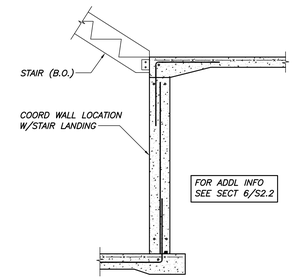

SECTION 5 S1.1
1/2"=1'-0"

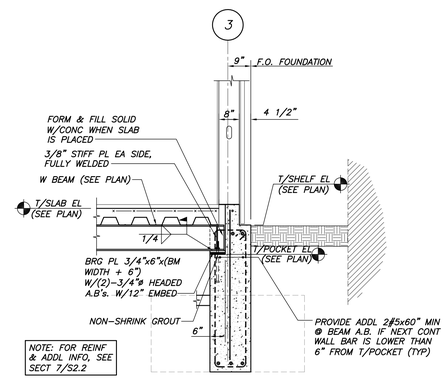

SECTION 7A S1.2
1/2"=1'-0"

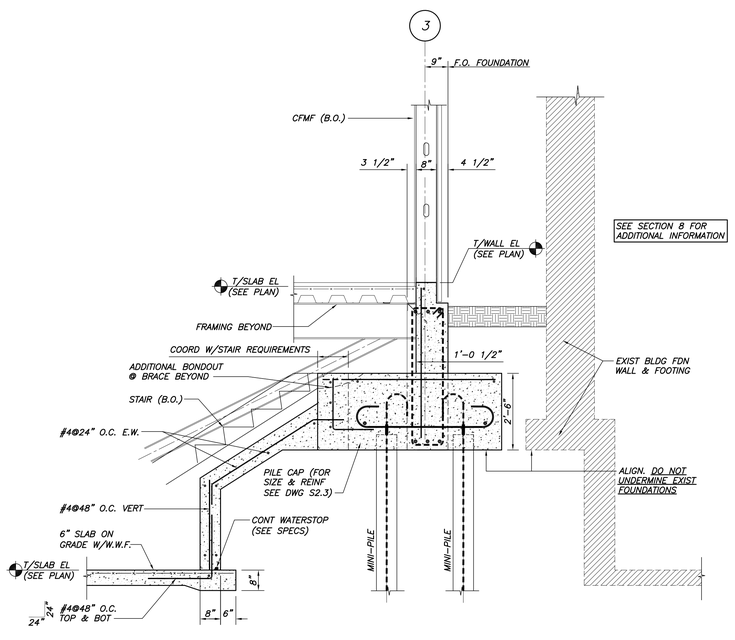

SECTION 6 S1.1, S1.2
1/2"=1'-0"

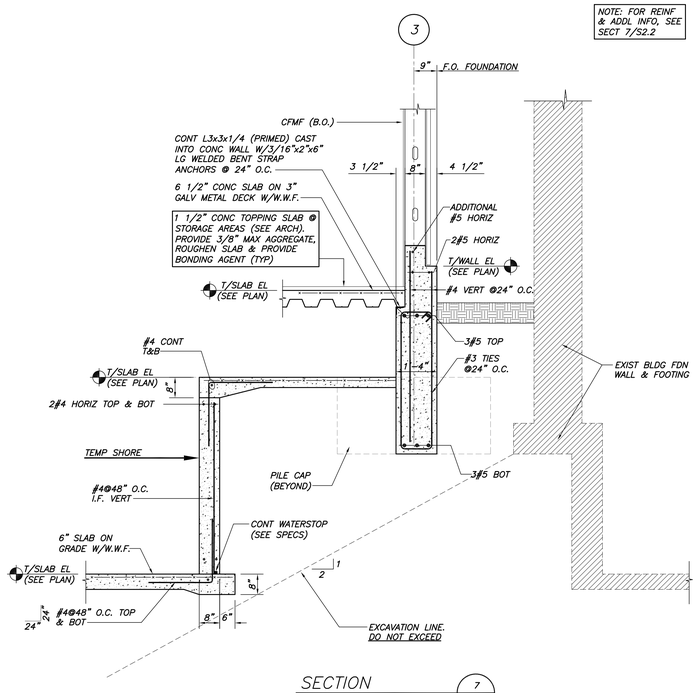

SECTION 7 S1.1, S1.2
1/2"=1'-0"

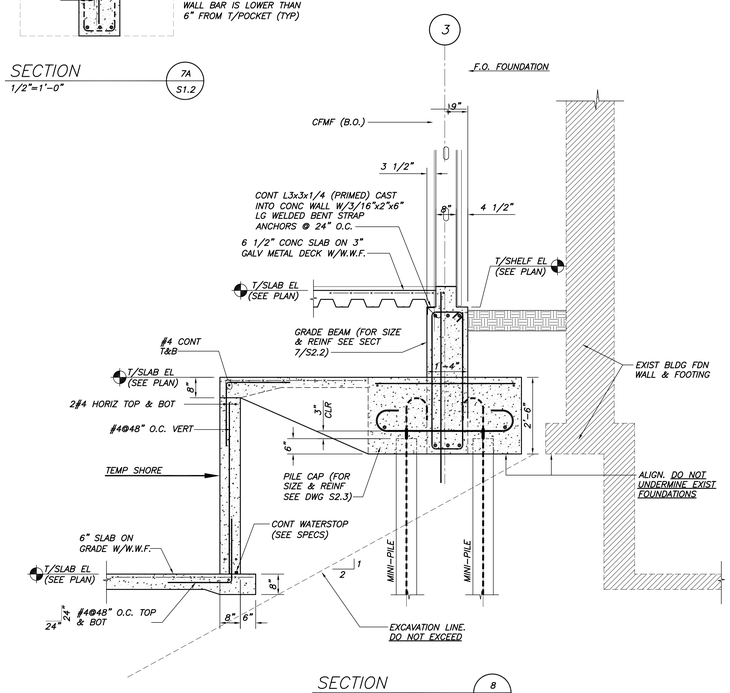

SECTION 8 S1.1, S1.2
1/2"=1'-0"

CONSULTANTS
BECKER STRUCTURAL ENGINEERS, INC.
75 YORK STREET PORTLAND, MAINE
207-879-1838
207-879-1822

SCHWARTZ / SILVER ARCHITECTS INC.
75 Kneeland Street Boston, Massachusetts 02111
Telephone 617.542.2650
Facsimile 617.951.0779

PROJECT

MAINE HISTORICAL SOCIETY	SEP 2006 Date
489 CONGRESS ST.	SEP 2006 Date
PORTLAND, MAINE	SEP 2006 Date
A.P.P. Drawn By	
E.A.R. Reviewed By	
D.S.B. Approved By	

DATE REVISIONS

Date	Number	Description
05/01/07		60% CD SET
07/02/07		100% CD REVIEW SET
07/16/07		100% CD SET

DRAWING TITLE

CONCRETE SECTIONS AND DETAILS

NOTED Scale

DRAWING NUMBER

S2.2