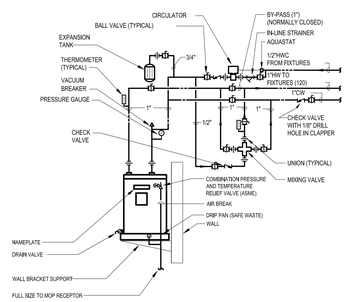

1 P-0 SUSPENDED ELECTRIC WATER HEATER NTS

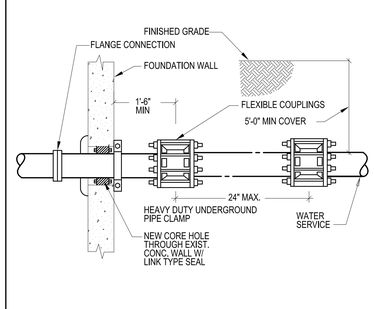

2 P-0 WATER SERVICE ENTRANCE NTS

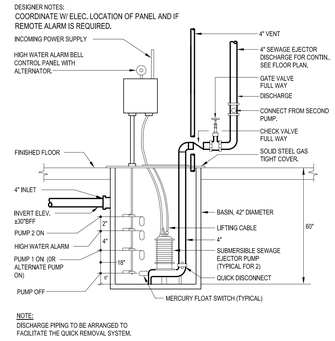

3 P-0 DUPLEX SEWAGE EJECTOR NTS

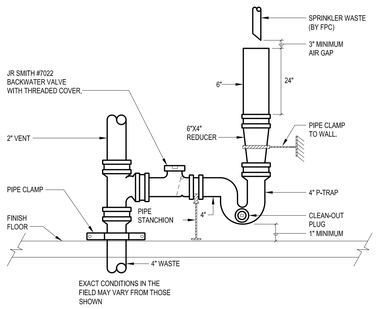

4 P-0 SPRINKLER WASTE OUTLET NTS

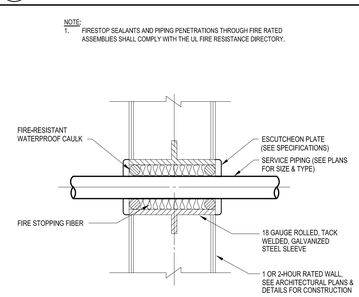

5 P-0 FIRE-RATED PIPE SLEEVE NTS

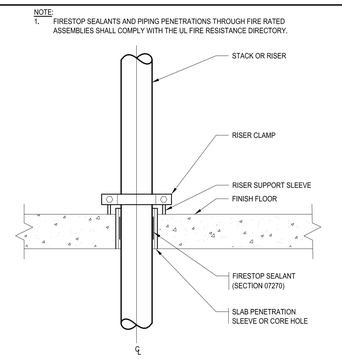

6 P-0 TYPICAL SLAB PENETRATION AND RISER SUPPORT SLEEVE NTS

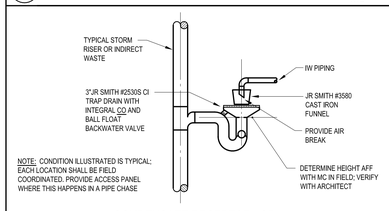

CONDENSATE RECEPTOR CR
NTS

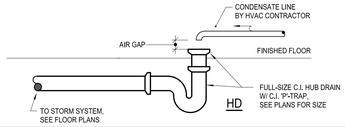

7 P-0 HUB DRAIN (CONDENSATE RECEPTOR) NTS

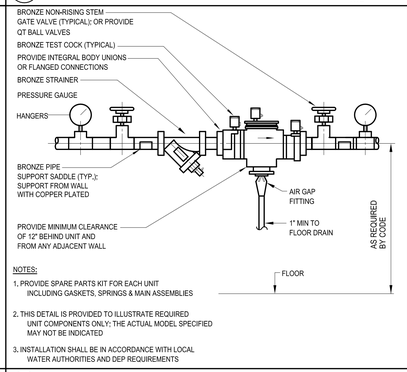

8 P-0 BACKFLOW PREVENTER NTS

ABBREVIATIONS

A	AQUASTAT
AP	ACCESS PANEL OR DOOR
CO	END CLEANOUT
CONT	CONTINUATION
CW	COLD WATER
CWR	COLD WATER RISER
DN	DOWN
DWG	DRAWING
EA	EACH
EDH	ELECTRIC DUCT HUMIDIFIER
EWC	ELECTRIC WATER COOLER
EWH	ELECTRIC WATER HEATER
FCO	FLOOR CLEANOUT
FD	FLOOR DRAIN
FPC	FIRE PROTECTION CONTRACTOR
FT	FEET
GC	GENERAL CONTRACTOR
HB	HOSE BIBB
HW	HOT WATER
HWC	HOT WATER CIRCULATION
IE	INVERT ELEVATION
IRR	IRRIGATION
LPC	LIMIT OF PLUMBING CONTRACTOR
MC	MECHANICAL SUBCONTRACTOR
NTS	NOT TO SCALE
P-1	PUMP & NUMBER
PC	PLUMBING CONTRACTOR
RD	ROOF DRAIN
SF	SQUARE FEET
TYP	TYPICAL
VS	VENT STACK
VTR	VENT THRU ROOF
WC	WATER CLOSET
WCO	WALL CLEANOUT
WH	WALL HYDRANT
W&T	WASTE & TRAP
PRV	PRESSURE REDUCING VALVE

PIPING LEGEND

	COLD WATER
	HOT WATER
	HOT WATER CIRCULATION
	VENT
	VENT (BELOW FLOOR)
	DRAIN
G	GAS
FM	FORCE MAIN
	SOIL
	WASTE
	SOIL (BELOW FLOOR)
	WASTE (BELOW FLOOR)
NPW	NON-POTABLE WATER
	RAIN WATER LEADER
	RAIN WATER LEADER (BELOW FLOOR)

VALVES AND ACCESSORIES

GATE VALVE
THERMOSTATIC MIXING VALVE
PRESSURE REDUCING VALVE
GAS COCK
LOCK SHIELD (BALANCING) VALVE
PRESSURE / TEMPERATURE RELIEF VALVE
BALL VALVE
CHECK VALVE
IN-LINE STRAINER
UNION
DRAIN VALVE
PRESSURE GAUGE WITH COCK
THERMOMETER
END CLEANOUT
WALL CLEANOUT
FLOOR CLEANOUT
DANDY (RISER) CLEANOUT
LINE CLEANOUT
BACK WATER VALVE
CAPPED PIPE
WASTE & TRAP
PIPE TURNING DOWN
PIPE RISING / OR RISING AND DROPPING
PIPE DROP OR RISE (45°)
PIPE DROP OR RISE (90°)
VALVE IN VERTICAL
AQUASTAT
VACUUM BREAKER
WATER HAMMER ARRESTOR
FLOOR DRAIN
HOSE BIBB (INTERIOR)
WALL HYDRANT (EXTERIOR)
ROOF DRAIN
ROOF DRAIN ABOVE
FIXTURE
REDUCED PRESSURE BACKFLOW PREVENTER
1 KEYED NOTE

PLUMBING FIXTURE AND EQUIPMENT CONNECTION SCHEDULE

FIXT. DESIG.	FIXTURE	S/W	V	C/W	H/W	REMARKS
P-1	WATER CLOSET	4"	2"	1"	"	WALL-HUNG, DUAL FLUSH VALVE
P-1A	WATER CLOSET (ACCESSIBLE)	4"	2"	1"	"	WALL-HUNG, DUAL FLUSH VALVE
P-2	URINAL	3"	2"	¾"	"	WALL-HUNG BATTERY OPERATED FLUSH VALVE
P-2A	URINAL (ACCESSIBLE)	3"	2"	¾"	"	WALL-HUNG BATTERY OPERATED FLUSH VALVE
P-3	LAVATORY	1 ½"	1 ½"	½"	½"	COUNTER TOP, BATTERY SENSOR FAUCET METERING TYPE
P-3A	LAVATORY (ACCESSIBLE)	1 ½"	1 ½"	½"	½"	COUNTER TOP, BATTERY SENSOR FAUCET METERING TYPE
P-4	MOP RECEPTOR	3"	2"	½"	½"	24"x24"x10"D, S.S. WALL GUARDS
P-4A	ELECTRIC WATER COOLER	1 ½"	1 ½"	½"	—	ACCESSIBLE, SINGLE
P-6	SINK (KITCHEN)	1 ½"	1 ½"	½"	½"	STAINLESS STEEL COUNTER, HOSE W/ SPRAY, 3/8PORER, 3/8" CW & VALVE FOR REFRIG.
P-7	SINK (TECH SERVICES)	1 ½"	1 ½"	½"	½"	S/S COUNTER

DRAWING LIST

DWG. No.	DRAWING NAME:	SHEET No.
P0.01	DETAILS & LEGENDS	1 of 4
P1.01	BASEMENT PLAN / GARDEN FLOOR PLAN	2 of 4
P1.02	FIRST FLOOR PLAN / FIRST FLOOR PLAN MEZZ.	3 of 4
P1.03	SECOND FLOOR PLAN / ROOF PENTHOUSE	4 of 4

DEMOLITION NOTES:

1. REMOVE ALL EXPOSED (OR CURRENTLY CONCEALED ITEMS IN WALLS BEING REMOVED) PIPING, FIXTURES, AND ACCESSORIES IN THE EXISTING BUILDING
2. CAP ALL EXSITING PIPING BEHIND EXISTING OR PROPOSED WALLS. FINISHED SURFACE TO BE COMPLETED BY GC.

CONSULTANTS
TMP Consulting Engineers Inc.
52 Temple Place
Boston, Massachusetts 02111-1304 USA
TEL 617-357-6060
FAX 617-357-5188
TMP Consulting Engineers

SCHWARTZ / SILVER ARCHITECTS INC.
75 Kneeland Street Telephone 617/542-6650
Boston, Massachusetts 02111 Facsimile 617/351-0779

PROJECT
MAINE HISTORICAL SOCIETY
489 CONGRESS ST.
PORTLAND, MAINE

MAK	SDA	RDW
Drawn By	Reviewed By	Approved By
07/16/07	07/16/07	07/16/07
Date	Date	Date

REVISIONS

Date	Number	Description
05/01/07		60% CD SET
07/02/07		100% CSD REVIEW SET
07/16/07		100% CD SET

DRAWING TITLE
DETAILS & LEGENDS

Scale: NONE

DRAWING NUMBER
P0.01

FILE: G:\DWG\ARCHITECTURAL\P4-FS\WORK\P0-01.DWG LAYOUT: P0.01 XREFS: XBIND: \10\ref\tmp\2\SOB mailtag: 070626 \MEP\xref\ 10. 09\04\07 2007 - 1:11pm smorgan
THE FOLLOWING ARCHITECTURAL FILES WERE UPDATED ON 07/18/07 22:7aRoof (from files received on 07/18/07)
THE FOLLOWING ARCHITECTURAL FILES WERE UPDATED ON 07/11/07 22:7aFP (from files received on 07/11/07)
THE FOLLOWING ARCHITECTURAL FILES WERE UPDATED ON 07/09/07 22:7aOUB (from files received on 07/09/07)
THE FOLLOWING ARCHITECTURAL FILES WERE UPDATED ON 07/05/07 22:7aTB (from files received on 07/05/07)
THE FOLLOWING ARCHITECTURAL FILES WERE UPDATED ON 06/27/07 22:7aSite (from files received on 06/27/07)