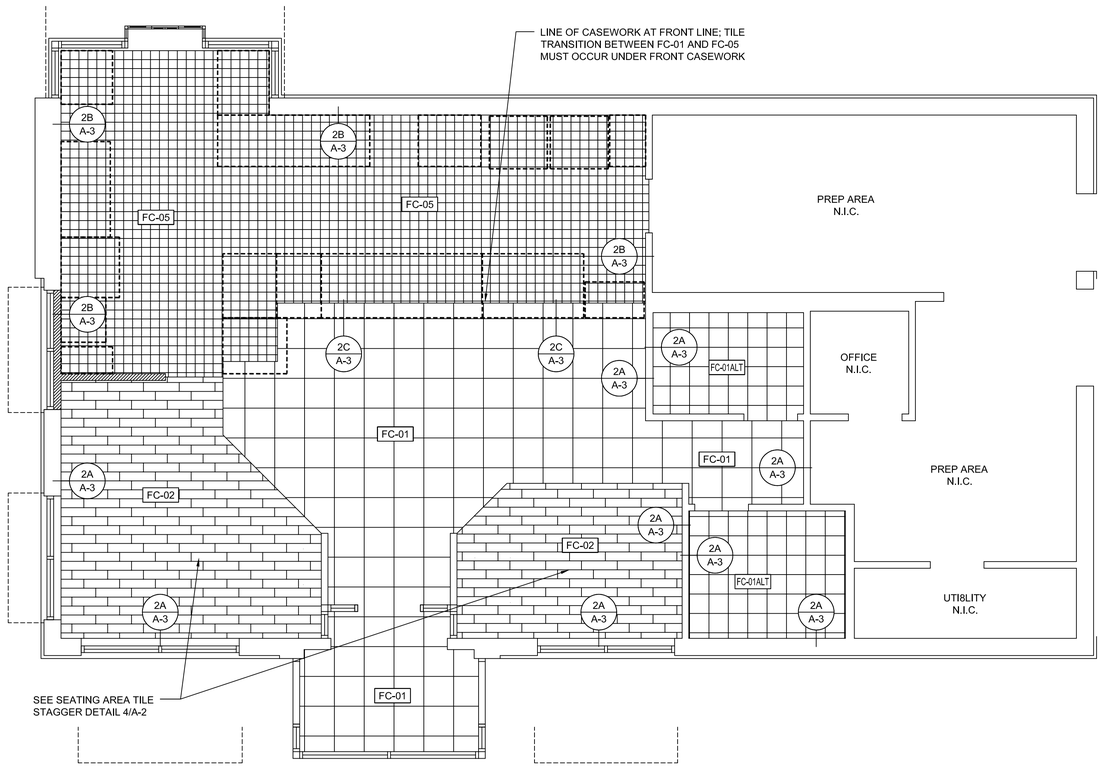

1 FLOOR FINISH PLAN

1/4" = 1'-0" NOTE:

FLOOR FINISH SCHEDULE:

FLOOR FINISH MATERIAL SCHEDULE - DARK ROAST

Checked: 12/18/2014

CODE	MATERIAL	MANUFACTURER	PRODUCT #	DESCRIPTION / REMARKS
FC-01	PORCELAIN TILE	DAL TILE	LEVARO NOCE WOODLANDS LV93	20"X20"; TRAFFIC & QUEUING AREAS
FC-01 (ALT)	PORCELAIN TILE	DAL TILE	LEVARO NOCE WOODLANDS LV93	13"X13"; TRAFFIC & QUEUING AREAS (USED WHERE UNDERSLAB MAY NOT BE LEVEL ENOUGH FOR FC-01 TILE
FC-02	PORCELAIN PLANK TILE	DAL TILE	YACHT CLUB 04 "SEA ANCHOR"	6"X24"; SEATING AREA- MAX JOINT OVERLAP NOT TO EXCEED 1/3 OF TILE LENGTH.
FC-05	QUARRY TILE	DAL TILE	QUARRY TILE 0TO8661P "SAHARA SAND"	6"X6"; BACKLINE/SERVICE AREA & B.O.H. AREAS
G-01	GROUT	CUSTOM BUILDING PRODUCTS	#52 "TOBACCO BROWN"	FLOOR GROUT- ALL FLOOR TILE
WB-01	CERAMIC TILE WALL BASE	DAL TILE	COLOUR SCHEME B909 "ARTISAN BROWN"	CUT 12"X12" FLOOR TILE W/ SATIN NICKEL SCHLUTER STRIP CAP JOLLY - ANIGB
WB-01 ALT	CERAMIC TILE WALL BASE	DAL TILE	COLOUR SCHEME B909 "ARTISAN BROWN" #B909P36C9TB1P2	6"X12" COVED BASE TILE (OPTIONAL UPGRADE)
WB-02	QUARRY TILE WALL BASE	DAL TILE	QUARRY TILE Q3565 "SAHARA SAND"	5"X6" COVE BASE- SEE NATIONAL ACCOUNTS FOR INSIDE/OUTSIDE CORNER PRODUCT NUMBERS

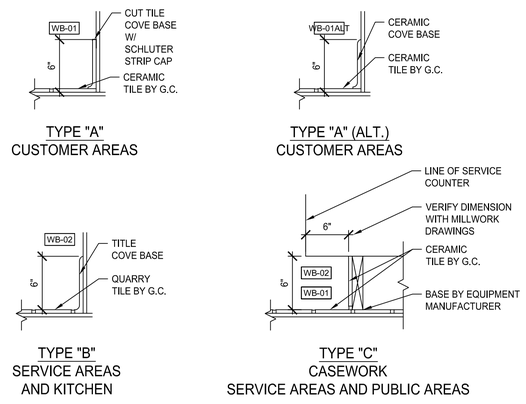

2 TILE BASE DETAILS

1" = 1'-0" NOTE:

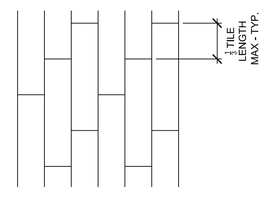

WHEN INSTALLING THE PLANK TILE IN A STAGGERED PATTERN, THE STAGGER SHOULD EQUAL 1/3 THE TILE LENGTH. STAGGERING THE TILE ANY MORE THAN 1/3 THE DISTANCE COULD RESULT IN UNEVEN JOINTS.

3 SEATING AREA TILE STAGGER DETAIL

N.T.S. NOTE:

dunkin' brands

LICENSED ARCHITECT JAMES D. SMITH No. AH2302 STATE OF MAINE

JAMES D. SMITH, ARCHITECT, AIA
35 LOTHROP'S LANE
WEST BARNSTABLE, MA 02668
PHONE: 508-367-8920
JAMESDSMITH11@COMCAST.NET

DATE	02-29-16
SCALE	NOTED
DRAWN	ARL
JOB #	D15098
C.M.	R. MAHONEY

REVISIONS

STORE LOCATION:
PORTLAND, ME
599 WARREN AVE.

FLOOR FINISH PLAN, SCHEDULE, DETAILS

P.C. #: 339010

FRESH BREW IMAGE: "DARK ROAST"

A-3

D15098 339010 Portland ME 599 Warren Ave A3 Tile.dwg