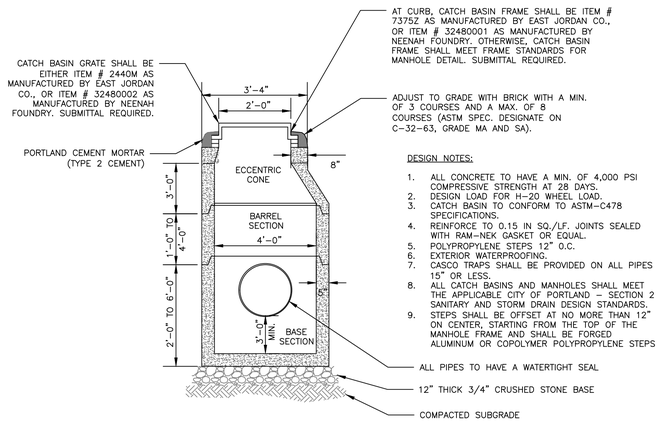

DESIGN NOTES:

1. ALL CONCRETE TO HAVE A MIN. OF 4,000 PSI COMPRESSIVE STRENGTH AT 28 DAYS.
2. DESIGN LOAD FOR H-20 WHEEL LOAD.
3. CATCH BASIN TO CONFORM TO ASTM-C478 SPECIFICATIONS.
4. REINFORCE TO 0.15 IN SQ./LF. JOINTS SEALED WITH RAM-NEK GASKET OR EQUAL.
5. POLYPROPYLENE STEPS 12" O.C.
6. EXTERIOR WATERPROOFING.
7. CASCO TRAPS SHALL BE PROVIDED ON ALL PIPES 15" OR LESS.
8. ALL CATCH BASINS AND MANHOLES SHALL MEET THE APPLICABLE CITY OF PORTLAND - SECTION 2 SANITARY AND STORM DRAIN DESIGN STANDARDS.
9. STEPS SHALL BE OFFSET AT NO MORE THAN 12" ON CENTER, STARTING FROM THE TOP OF THE MANHOLE FRAME AND SHALL BE FORGED ALUMINUM OR COPOLYMER POLYPROPYLENE STEPS

4'-0" ECCENTRIC PRECAST CATCH BASIN
NOT TO SCALE

NOTES:

1. INSTALL CATCH BASIN HOODS IN ALL CATCH BASINS UNLESS OTHER WISE NOTED
2. PREFERRED STYLE DESIGNED TO ELIMINATE CEMENTING OF THE TRAP.
3. REFER TO MANUFACTURER'S RECOMMENDATIONS FOR INSTALLATION REQUIREMENTS

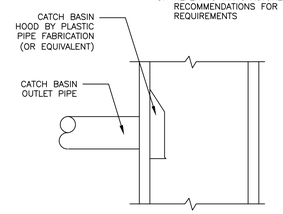

CATCH BASIN HOOD DETAIL
NOT TO SCALE

NOTES:

1. RIPRAP SHALL BE DESCRIBED BY M.D.O.T. 703.26 EXCEPT SIZE SHALL BE AS SHOWN.

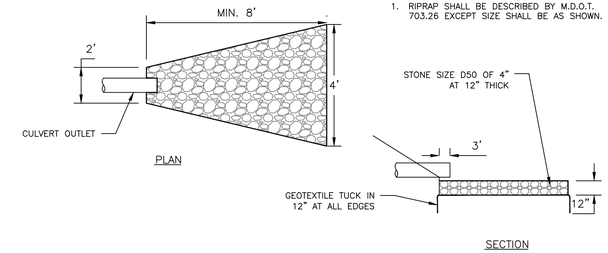

OUTLET APRON DETAIL
NOT TO SCALE

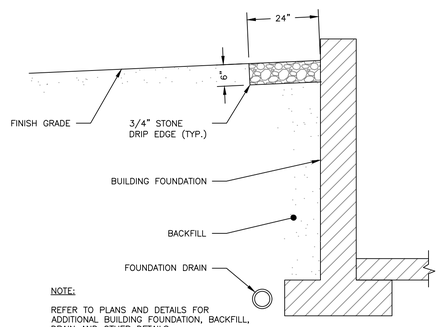

NOTE:

REFER TO PLANS AND DETAILS FOR ADDITIONAL BUILDING FOUNDATION, BACKFILL, DRAIN AND OTHER DETAILS.

DRIP EDGE DETAIL
NOT TO SCALE

DESIGN NOTES:

1. ALL CONCRETE TO HAVE A MIN. OF 4,000 PSI COMPRESSIVE STRENGTH AT 28 DAYS.
2. DESIGN LOAD FOR H-20 WHEEL LOAD.
3. CATCH BASIN TO CONFORM TO ASTM-C478 SPECIFICATIONS.
4. REINFORCE TO 0.12 IN SQ./LF.
5. JOINTS SEALED WITH BUTYL RUBBER.
6. POLYPROPYLENE STEPS 12" O.C.

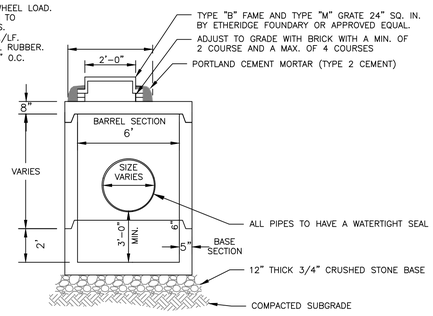

6'-0" PRECAST CATCH BASIN WITH FLATTOP
NOT TO SCALE

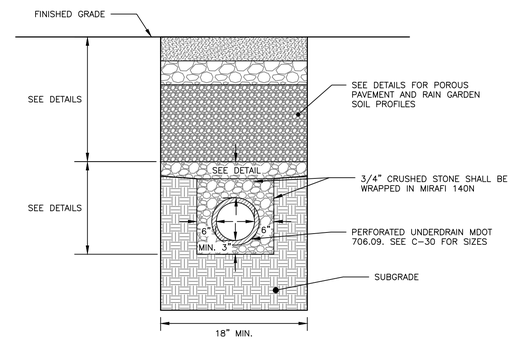

NOTES:
1. MINIMUM UNDERDRAIN SLOPE 0.0025 (0.25%)
2. PERFORATIONS IN UNDERDRAIN PIPE SHALL BE ORIENTED DOWN.

UNDERDRAIN DETAIL
NOT TO SCALE

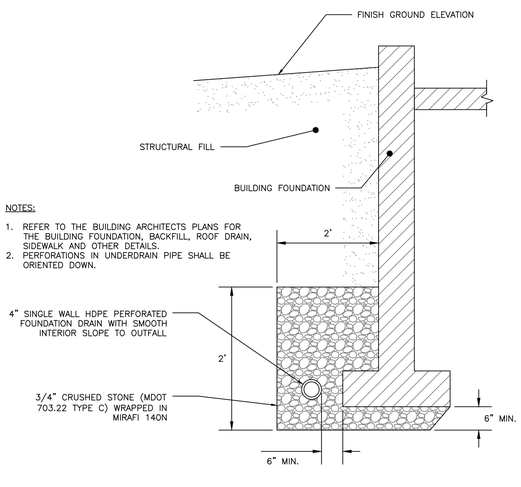

NOTES:

1. REFER TO THE BUILDING ARCHITECTS PLANS FOR THE BUILDING FOUNDATION, BACKFILL, ROOF DRAIN, SIDEWALK AND OTHER DETAILS.
2. PERFORATIONS IN UNDERDRAIN PIPE SHALL BE ORIENTED DOWN.

FOUNDATION DRAIN DETAIL
NOT TO SCALE

DESIGN NOTES:

1. ALL CONCRETE TO HAVE A MIN. OF 4,000 PSI COMPRESSIVE STRENGTH AT 28 DAYS.
2. DESIGN LOAD FOR H-20 WHEEL LOAD.
3. CATCH BASIN TO CONFORM TO ASTM-C478 SPECIFICATIONS.
4. REINFORCE TO 0.12 IN SQ./LF.
5. JOINTS SEALED WITH BUTYL RUBBER.
6. POLYPROPYLENE STEPS 12" O.C.

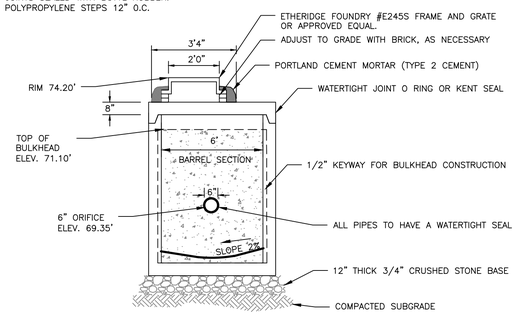

SIDE PROFILE

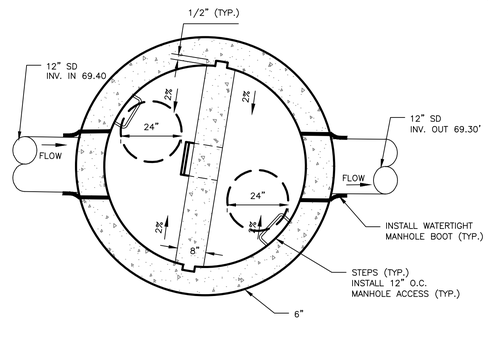

PLAN VIEW

OUTLET CONTROL STRUCTURE
NOT TO SCALE

DESIGN NOTES:

1. ALL CONCRETE TO HAVE A MIN. OF 4,000 PSI COMPRESSIVE STRENGTH AT 28 DAYS.
2. DESIGN LOAD FOR H-20 WHEEL LOAD.
3. CATCH BASIN TO CONFORM TO ASTM-C478 SPECIFICATIONS.
4. REINFORCE TO 0.12 IN SQ./LF.
5. JOINTS SEALED WITH BUTYL RUBBER.
6. POLYPROPYLENE STEPS 12" O.C.

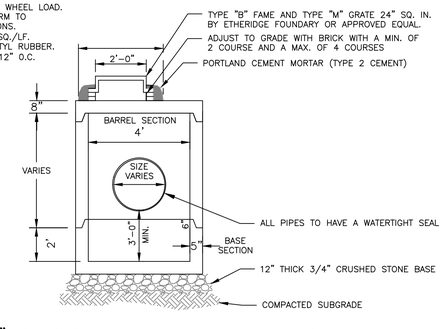

4'-0" PRECAST CATCH BASIN WITH FLATTOP
NOT TO SCALE

FINAL
NOT ISSUED FOR CONSTRUCTION

ISSUED FOR	BY	DATE
PRELIM. APP.	WHS	2/2/17
SLODA APP.	WHS	3/3/17
FINAL APP.	WHS	4/18/17
BLDG & MCG PERMITS	WHS	5/23/17

DRAWING NAME: DRAINAGE DETAILS

PROJECT NAME: RIVERSIDE SELF-STORAGE CONTAINERS

CLIENT: 547 RIVERSIDE LLC
59 MOODY STREET, PORTLAND, MAINE 04101

ACORN ENGINEERING, INC.

THIS PLAN SHALL NOT BE MODIFIED WITHOUT WRITTEN PERMISSION FROM ACORN ENGINEERING, INC. ANY MODIFICATIONS MADE WITHOUT PERMISSION OR OTHERWISE, SHALL BE AT THE USER'S SOLE RISK AND WITHOUT LIABILITY TO ACORN ENGINEERING, INC.

ACORN ENGINEERING, INC.
158 DANFORTH STREET, PORTLAND, MAINE 04102
(207) 775-2655

FILE:	1080_CIVIL
JN:	1080
SCALE:	NTS
DESIGNED BY:	WHS
DRAWN BY:	MCB
CHECKED BY:	WHS

STATE OF MAINE
WILLIAM H. SAVAGE
No. 14416
6-23-17

DRAWING NO.
C-44