PLANTING NOTES:

1. ALL PLANT SELECTION AND INSTALLATION WILL BE IN COMPLIANCE WILL THE CITY OF PORTLAND TECHNICAL MANUAL (SECTION 4).
2. CONTRACTOR TO VERIFY ALL UTILITIES ON PROPERTY AND TO PROTECT ALL UTILITIES DURING EXCAVATION FOR PLANTS.
3. IF THERE IS A DISCREPANCY BETWEEN THE NUMBER OF PLANTS SHOWN ON THE PLAN AND THE NUMBER OF PLANTS SHOWN IN PLANT LIST (IF ANY), THE NUMBER OF PLANTS SHOWN ON PLAN WILL TAKE PRECEDENCE.
4. ALL MATERIAL SHALL COMPLY WITH THE LATEST EDITION OF THE AMERICAN STANDARD FOR NURSERY STOCK, AMERICAN ASSOCIATION OF NURSERYMAN.
5. THE ENGINEER MAY TAG ALL PLANTS AT THE NURSERY AND INSPECT THEM AFTER DELIVERY TO THE SITE. ALL PLANT MATERIALS SHALL BE INSPECTED BY THE ENGINEER ON SITE PRIOR TO INSTALLATION.
6. ALL PROPOSED PLANTS SHALL BE LOCATED CAREFULLY AS SHOWN ON THE PLANS AND THE PLACEMENTS SHALL BE APPROVED BY ENGINEER BEFORE THE PLANTS ARE INSTALLED.
7. ALL DISTURBED AREAS NOT TO BE PAVED OR PLANTED SHALL BE LOAMED AND SEEDED AS SHOWN. THE SEED MIX SPECIFICATIONS ARE AS FOLLOWS: LESCO FINE FESCUE LINKS BLEND OF 35% HARD FESCUE, 35% CREEPING RED FESCUE, 20% CHEWINGS FESCUE AND 10% SHEEP FESCUE. ADD 5% LITTLE BLUESTEM AND 5% NORTHEAST WILDFLOWER SEED MIXTURE BY WEIGHT TO THE LINKS BLEND.
8. STAKING AND GUYING SHALL BE DETERMINED BY THE ENGINEER ON A TREE BY TREE BASIS. FOR PRICING PURPOSES, PROVIDE A PER TREE UNIT COST FOR STAKING AND GUYING. IF STAKING AND GUYING IS REQUIRED, REMOVE TREE WRAP, STAKES, AND GUY WIRES AT END OF FIRST GROWING SEASON.
9. FOR TREE PLANTING IN LAWN AREAS, ANY DISTURBED LAWN SHALL BE LOAMED AND SEEDED AS NECESSARY.

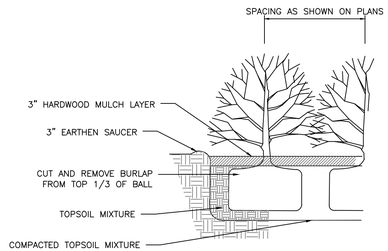

SHRUB PLANTING DETAIL
NOT TO SCALE

NOTES:
1. CONCRETE: 5000 PSI @ 28 DAYS
2. CEMENT: TYPE III PER ASTM C150–81
3. LIGHT POLE BASE SHALL BE AS SUPPLIED BY GEORGE R. ROBERTS CO., OR APPROVED EQUAL
4. DIAMETER TBD BASED UPON THE MANUFACTURER'S RECOMMENDATION.

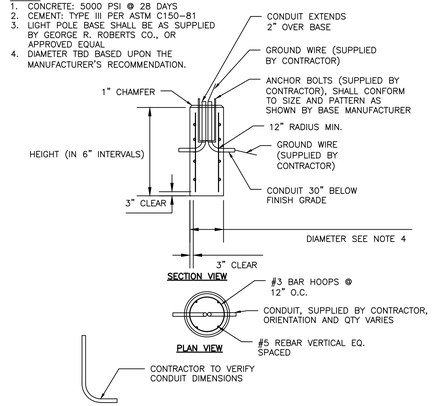

LIGHT POLE BASE
NOT TO SCALE

DESIGN NOTE:
1. ALL PIPES SHALL BE TOPPED WITH A PLASTIC COVER IN TRAFFIC YELLOW

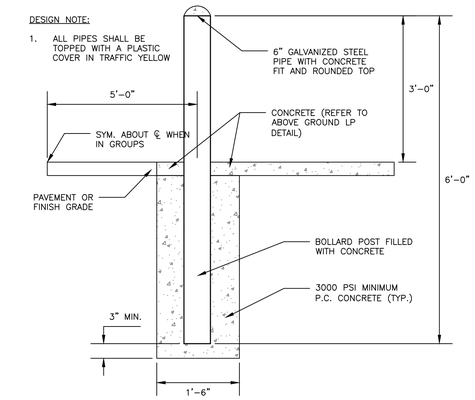

PIPE BOLLARD
NOT TO SCALE

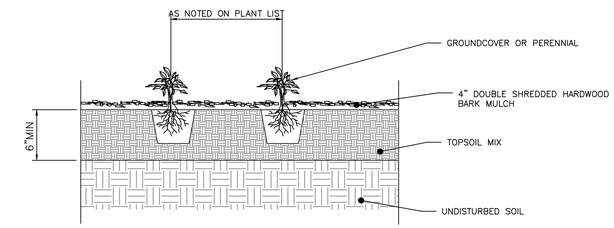

PERENNIAL PLANTING DETAIL
NOT TO SCALE

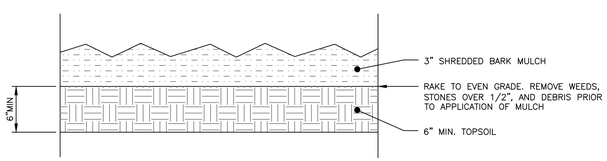

BARK MULCH DETAIL
NOT TO SCALE

NOTES:
1. BICYCLE RACK SHALL HAVE CAPACITY FOR TWO BICYCLES.
2. BICYCLE RACK PARTS SHALL BE OF UNIFORM COLOR AND SHALL BE FINISHED IN ACCORDANCE WITH PRODUCT SPECIFICATION. PER CITY OF PORTLAND TECHNICAL STANDARDS ALL BIICYCLE RACKS WITHIN THE RIGHT–OF–WAY SHALL MATCH THE FURNITURE COLOR FOR THAT LOCATION AS DESCRIBED IN THE MUNICIPAL LIGHTING STANDARDS; IF NO DESIGNATED COLOR FOR THAT AREA EXISTS, BICYCLE RACKS SHALL BE BLACK.
3. BICYCLE RACK SHALL BE INSTALLED IN ACCORDANCE WITH MANUFACTURER'S MOST RECENT INSTALLATION RECOMMENDATIONS, AND SHALL BE INSTALLED WITH AN IN–GROUND MOUNT UNLESS OTHERWISE APPROVED BY ENGINEER.
4. BICYCLE RACK SHALL BE "DERO BIKE HITCH", AS MANUFACTURED BY DERO BIKE RACKS.
5. MINIMUM OFFSETS SHOWN. MANUFACTURER'S RECOMMENDED OFFSETS SHALL BE ENFORCED WHERE POSSIBLE.
6. MINIMUM DISTANCE BETWEEN BICYCLE RACKS SHALL BE 24". RECOMMENDED DISTANCE BETWEEN BICYCLE RACKS SHALL BE 38".
7. ALL OFFSETS ARE FROM OUTSIDE EDGES OF ITEMS.
8. CONCRETE SHALL BE 4000 PSI @28 DAYS. BOTTOM OF CONCRETE SHALL BE AT TOP OF SIDEWALK GRAVEL ELEVATION. DEPTH VARIES APRROX. 4"–7".
9. GRAVEL LAYER SHALL BE INSTALLED IN ACCORDANCE WITH BRICK SIDEWALK WITH BITUMINOUS BASE DETAIL, AND SHALL BE MAINEDOT 703.06 TYPE B.
10. TOP OF BRICK LAYER SHALL BE AT SAME ELEVATION IN ACCORDANCE WITH BRICK SIDEWALK DETAIL.

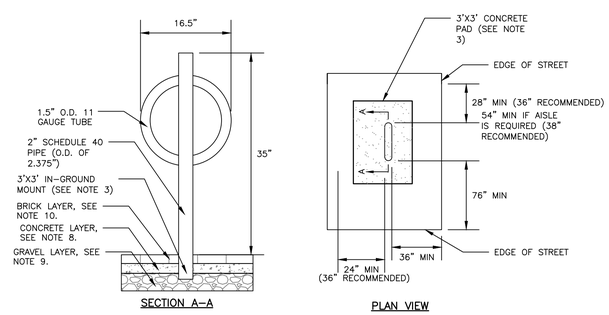

BICYCLE RACK DETAIL
NOT TO SCALE

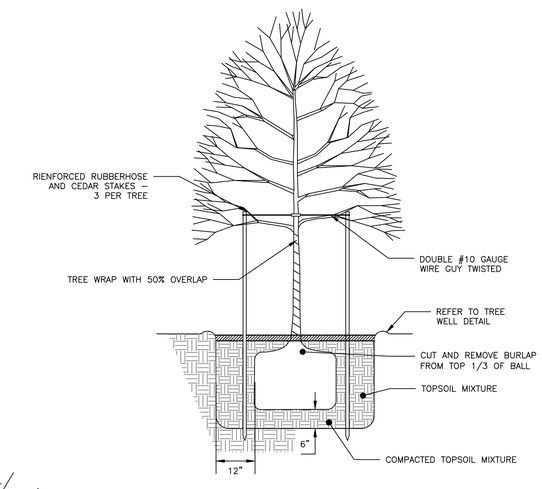

TREE PLANTING DETAIL
NOT TO SCALE

DIG HOLE AT LEAST 2 TIMES THE DIAMETER OF THE ROOT BALL AND AS DEEP AS THE ROOT BALL (NO DEEPER). SET ROOT BALL CENTERED, WITH THE TOP AT DOWNHILL EDGE OF THE HOLE.

TOPSOIL BACKFILL SHALL BE NATURAL FRIABLE, FERTILE, FINE LOAMY SOIL POSSESSING THE CHARACTERISTICS OF TOPSOIL IN THE VICINITY WHICH PRODUCE A HEAVY GROWTH. TOPSOIL SHALL CONTAIN NOT LESS THAN 6% NOR MORE THAN 20% ORGANIC MATTER. TOP SOIL SHALL HAVE A pH VALUE OF NOT LESS THAN 5.5 NOR MORE THAN 7.0.

CONTAINER GROWN STOCK – REMOVE CONTAINER PROTECTING THE ROOT BALL. GENTLY COMB OUT THE ROOTS. PRUNE DAMAGED ROOTS.

BACKFILL THE HOLE WITH TOPSOIL TO A DEPTH NOT TO EXCEED 8" THEN WATER SUFFICIENTLY TO SETTLE TOPSOIL. REPEAT SOIL BACKFILL, WATER, DRAIN. TOPSOIL SHALL BE TAMPED UNDER EDGES OF THE BALLED PLANTS. BACKFILL TO FINISH GRADE AND CREATE AN EARTHEN SAUCER. SOAK PLANTS TWICE WITHIN THE FIRST TWENTY–FOUR HOURS OF PLANTING.

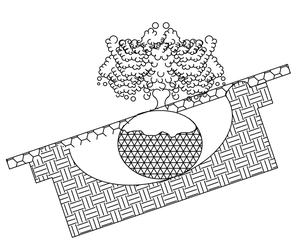

TYPICAL PLANTING
NOT TO SCALE

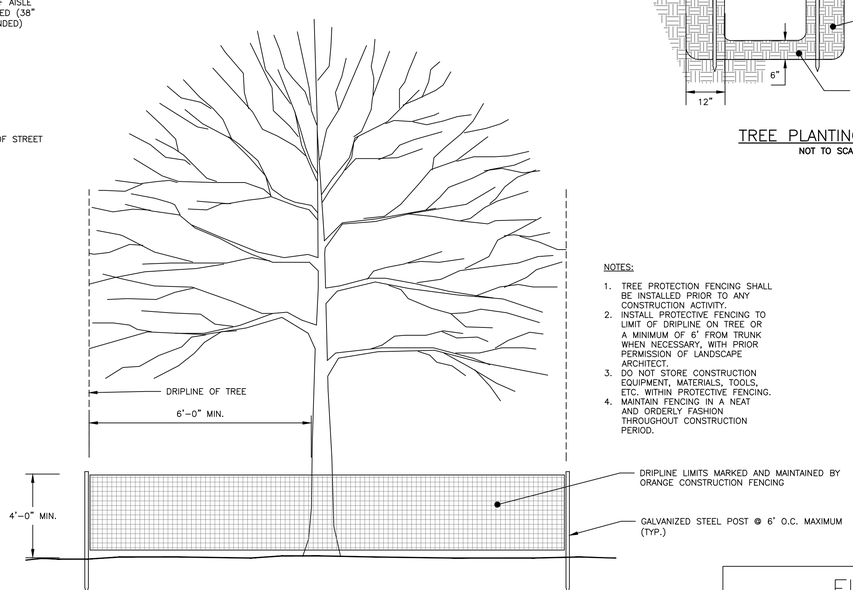

NOTES:
1. TREE PROTECTION FENCING SHALL BE INSTALLED PRIOR TO ANY CONSTRUCTION ACTIVITY.
2. INSTALL PROTECTIVE FENCING TO LIMIT OF DRIPLINE ON TREE OR A MINIMUM OF 6' FROM TRUNK WHEN NECESSARY, WITH PRIOR PERMISSION OF LANDSCAPE ARCHITECT.
3. DO NOT STORE CONSTRUCTION EQUIPMENT, MATERIALS, TOOLS, ETC. WITHIN PROTECTIVE FENCING.
4. MAINTAIN FENCING IN A NEAT AND ORDERLY FASHION THROUGHOUT CONSTRUCTION PERIOD.

TREE PROTECTION DETAIL
NOT TO SCALE

FINAL
NOT ISSUED FOR CONSTRUCTION

ISSUED FOR	BY / DATE
PRELIM. APP.	WHS 2/2/17
SLODA APP.	WHS 3/3/17
FINAL APP.	WHS 4/18/17
BLDG & MCG PERMITS	WHS 5/23/17

DRAWING NAME: SITE DETAILS – 2

PROJECT NAME: RIVERSIDE SELF–STORAGE CONTAINERS

CLIENT: 547 RIVERSIDE LLC
59 MOODY STREET, PORTLAND, MAINE 04101

ACORN ENGINEERING, INC.

THIS PLAN SHALL NOT BE MODIFIED WITHOUT WRITTEN PERMISSION FROM ACORN ENGINEERING, INC. ANY MODIFICATION MADE WITHOUT WRITTEN PERMISSION OR OTHERWISE, SHALL BE AT THE USER'S SOLE RISK AND WITHOUT LIABILITY TO ACORN ENGINEERING, INC.

ACORN ENGINEERING, INC.
158 DANFORTH STREET, PORTLAND, MAINE 04102
(207) 775–2655

FILE:	1080_CIVIL
JN:	1080
SCALE:	NTS
DESIGNED BY:	WHS
DRAWN BY:	MCB
CHECKED BY:	WHS

STATE OF MAINE
WILLIAM H. SAVAGE
No. 11418
9-23-17

DRAWING NO.
C-41