GENERAL STRUCTURAL NOTES

1. ALL WORK SHALL CONFORM TO THE REQUIREMENTS OF ALL APPLICABLE STATE AND LOCAL CODES, INCLUDING BUT NOT LIMITED TO:
   - -MAINE MODEL BUILDING CODE: IRC 2009 ED
   - -ANSI-ASCE 7-05
   - -ACI 318-05 "BUILDING CODE REQUIREMENTS FOR REINFORCED CONCRETE"
   - -ACI 301 "SPECIFICATIONS FOR STRUCTURAL CONCRETE FOR BUILDINGS"
   - -AISC STEEL CONSTRUCTION MANUAL 9TH ED ASD
   - -SIS1 COLD FORMED STEEL DESIGN MANUAL
   - -ANSI-AF&PA NDS-2005
2. ROOF DESIGN LOADS:

SNOW LOAD	51 PSF + UNBAL.
TOP CHORD DL	10 PSF
BOTTOM CHORD DL	10 PSF
TOTAL ROOF LOAD	61 PSF + UNBAL.

3. WIND LOADS:
   BASED ON WIND SPEED OF 95 MPH, EXP. C, $\lambda = 1.4$, SIMPLIFIED PROCEDURE.
4. CONTRACTOR SHALL BRING TO THE ATTENTION OF THE ENGINEER ANY CONDITIONS DIFFERENT FROM THOSE SHOWN ON THE DRAWINGS AND ALSO ANY CONDITIONS THAT PREVENT THE CONTRACTOR'S COMPLETION OF THE WORK AS SHOWN ON THE CONSTRUCTION DRAWINGS.
5. ALL WORK SHALL BE PERFORMED BY PERSONS QUALIFIED IN THEIR TRADE AND LICENSED TO PRACTICE SUCH TRADE IN THE STATE IN WHICH THE PROJECT IS LOCATED.
6. THESE DRAWINGS SHALL BE USED IN CONJUNCTION WITH ANY ARCHITECTURAL, MECHANICAL, AND ELECTRICAL DRAWINGS, IN ADDITION TO SPECIFICATIONS AND ANY SHOP DRAWINGS PROVIDED BY SUBCONTRACTORS AND SUPPLIERS.
7. ALL DIMENSIONS, ELEVATIONS, AND CONDITIONS SHALL BE VERIFIED IN THE FIELD BY GENERAL CONTRACTOR (G.C.) AND ANY DISCREPANCIES SHALL BE BROUGHT TO THE ATTENTION OF THE ENGINEER FOR CLARIFICATION BEFORE PROCEEDING WITH THE AFFECTED PART OF THE WORK.
8. UNLESS OTHERWISE NOTED, DETAILS, SECTIONS, AND NOTES SHOWN ON ANY DRAWING SHALL BE CONSIDERED TYPICAL FOR ALL SIMILAR DETAILS.
9. THESE DRAWINGS DO NOT SHOW SIZE, LOCATION OR TYPE OF OPENING IN THE FOUNDATION SYSTEM FOR ELECTRICAL, PLUMBING OR MECHANICAL EQUIPMENT. THE GENERAL CONTRACTOR SHALL BE RESPONSIBLE FOR LOCATING THESE ITEMS.
10. ALL SHOP DRAWINGS PROVIDED BY OTHERS SHALL BE SUBMITTED TO THE ENGINEER FOR REVIEW PRIOR TO FABRICATION OF MATERIAL OR THE PURCHASE OF NON-RETURNABLE STOCK. DIMENSIONAL REVIEW IS THE CONTRACTOR'S RESPONSIBILITY.

CONCRETE NOTES

1. CODES:

   COMPLY WITH THE FOLLOWING LATEST EDITIONS AND CURRENT AMENDMENTS:

   1.1 ACI 301 "SPECIFICATIONS FOR STRUCTURAL CONCRETE FOR BUILDINGS"
   1.2 ACI 318 "BUILDING CODE REQUIREMENTS FOR REINFORCED CONCRETE"
   1.3 CRSI "CONCRETE REINFORCING STEEL INSTITUTE, MANUAL OF STANDARD PRACTICE"
4. MATERIALS:
   4.1 REINFORCING STEEL: GRADE 60, ASTM 615, NEW DEFORMED BARS.
   4.2 REINFORCING FOR SLABS: EQUAL TO FIBERMESH, 1.5 lbs/CY CONCRETE, OR 6x6 W1.4xW1.4 WWF.
   4.3 MIXING WATER SHALL BE POTABLE, FREE OF ANY SUBSTANCES THAT MAY BE DELETRIOUS TO THE CONCRETE OR REINFORCING STEEL.
5.2 INTERIOR SLABS:
   - -CEMENT SHALL BE ASTM 150, TYPE II PORTLAND CEMENT
   - -28 DAY COMPRESSIVE STRENGTH: 3000 PSI
   - -MAX. AGG. SIZE: ¾"
   - -AIR CONTENT: 6% ± 1% BY VOLUME (ONLY IF SLAB IS EXPOSED TO FREEZING)
   - -MAX WATER-CEMENT RATIO: 0.45
   - -AGGREGATE SHALL CONFORM TO ASTM C33

5.3 WALLS AND FOOTINGS:
   - -CEMENT SHALL BE ASTM 150, TYPE II PORTLAND CEMENT
   - -28 DAY COMPRESSIVE STRENGTH: 3000 PSI
   - -MAX. AGG. SIZE: 3/4"
   - -AIR CONTENT: 5% ± 1% BY VOLUME
   - -MAX WATER-CEMENT RATIO: 0.50
   - -AGGREGATE SHALL CONFORM TO ASTM C33

5.3 ADMIXTURES:

   PROVIDE ADMIXTURES WHICH ARE CHEMICALLY COMPATIBLE FOR THEIR INTENDED USE. COMPLY WITH MANUFACTURER'S INSTRUCTIONS FOR USE. BASE DOSAGE RATES ON CEMENT CONTENT. CALCIUM CHLORIDE IS NOT ALLOWED.

   5.3.1 HIGH RANGE WATER REDUCERS (SUPER PLASYCIZERS): EQUAL TO DARACEM 100 BY W.R. GRACE & CO., ASTM C-494.
   5.3.2 ACCELERATORS: EQUAL TO DARASET BY W.R. GRACE & CO., ASTM C-404 TYPE C OR E.
   5.3.3 AIR ENTRANCING: EQUAL TO "DARAVAIR" BY W.R. GRACE & CO., ASTM C-260 AND ARMY CORPS CRD-C-13.

5.4 CONCRETE SURFACE COATINGS:

   5.4.1 CURING COMPOUND: "KURE-N-SEAL" BY SONNEBORN, OR EQUAVALENT.
   5.4.2 BITUMINOUS DAMPPROOFING: EQUAL TO BRUSH GRADE FOUNDATION COATING BY EUCLID.

5.5 FORMS AND RELATED MATERIAL:

   5.5.1 FORMS FOR CONCRETE SURFACES THAT WILL BE EXPOSED IN THE FINISHED BUILDING SHALL BE PLYFORM CLASS I, B-B EXTERIOR TYPE CONFORMING TO U.S. PRODUCT STANDARD PS 1. FORMS FOR CONCRETE SURFACES NOT EXPOSED IN THE FINISHED BUILDING MAY BE PLYFORM OR MATCHED LUMBER.
   5.5.2 FORM OIL USED ON SURFACE OF FORMS SHALL BE A NON-STAINING TYPE.

CONCRETE NOTES (CONT).

5.6 ALUMINUM PRODUCTS:

   5.6.1 NO ALUMINUM CONDUIT, PIPE, INSERTS, REGLETS, ETC. SHALL BE PLACED IN ANY CONCRETE, UNLESS COATED WITH BITUMINOUS DAMPPROOFING.
   5.6.2 NO EQUIPMENT MADE OF ALUMINUM OR ALUMINUM ALLOYS SHALL BE USED FOR PUMP LINES, TREMIES OR CHUTES IN CONVEYING CONCRETE TO POINT OF PLACEMENT.

5.7 GROUT:

   5.7.1 NON-SHRINK GROUT FOR USE UNDER COLUMN BASE PLATES AND BEAM BEARING PLATES SHALL BE EMBECO GROUT #885, PRE-MIXED, AS MANUFACTURED BY MASTER BUILDERS, OR APPROVED EQUIVALENT.

5.8 PREFORMED EXPANSION JOINT FILLER:

   5.8.1 A NON-EXTENDING AND RESILIENT BITUMINOUS TYPE JOINT FILLER, ½" THICK.

5.9 EMBEDDED ITEMS:

   5.9.1 EMBEDDED ITEMS SUCH AS ANCHOR BOLTS, ETC., SHALL BE INSTALLED USING A TEMPLATE AND BE SECURELY HELD IN PLACE DURING CONCRETE PLACEMENT.

5.10 SPACERS, SUPPORTS AND FASTENERS:

   5.10.1 FORM SPACERS, REINFORCING TIES AND CHAIRS, AND OTHER DEVICES NEEDED FOR PROPERLY SPACING, SUPPORTING, AND FASTENING REINFORCEMENET SHALL BE PROVIDED. CLAY BRICKS ARE NOT ALLOWED FOR USE AS SLAB STEEL BOLSTERS.

5.11 VAPOR BARRIER:

   5.11.1 UNDERSLAB MOISTURE VAPOR BARRIER SHALL BE MADE OF A LAYER OF 6 MIL. POLYETHYLENE PLASTIC. PLACE VAPOR BARRIER BETWEEN SLAB AND 6" MIN. CONSOLIDATED ¾" CRUSHED STONE.

6. CONSTRUCTION PRACTICES:

6.1 REINFORCEMENT:

   COMPLY WITH REQUIREMENTS OF CRSI, LATEST EDITION.

   6.1.1 MINIMUM CONCRETE COVER: 3" FOR CONCRETE CAST AGAINST SOIL; 2" FOR OTHER CONCRETE, UNLESS OTHERWISE SHOWN.

6.2 DEVELOPMENT AND SPLICING:

   PROVIDE DEVELOPMENT AND TENSION LAP SPLICE LENGTHS IN ACCORDANCE WITH THE FOLLOWING, UNLESS NOTED OTHERWISE ON PLANS:

DEVELOPMENT BAR SIZE	LENGTH*	CLASS C* LAP SPLICE
#4	12	16"
#5	12	20"
#6	15	26"
#7	21	36"
#8	28	48"

*INCREASE BY 30% FOR BARS SPACED <6".

6.4 JOINTS:

   6.4.3 CONTRACTION (CONTROL) JOINT: PROVIDE IN SLABS-ON-GRADE BY USING INSERTS OR BY SAW CUTTING TO A DEPTH OF ¼ THE SLAB THICKNESS. PROVIDE A ONE PART ELASTOMERIC JOINT SEALANT TO JOINT GROOVE, A MINIMUM OF 60 DAYS AFTER SLAB PLACEMENT UNLESS OTHERWISE APPROVED.

6.5 CONCRETE MIXING:

   6.5.1 READY-MIXED CONCRETE SHALL BE MIXED AND DELIVERED IN ACCORDANCE WITH THE REQUIREMENTS SET FORTH IN ASTM C94.
   6.5.2 ALL CONCRETE SHALL BE MIXED UNTIL THERE IS A UNIFORM DISTRIBUTION OF THE MATERIALS BEFORE DISCHARGE. THE MIXING SHALL BE CONTINUOUS AFTER THE WATER HAS BEEN ADDED TO THE MIX IN THE DRUM.
   6.5.3 NO CONCRETE SHALL BE PLACED IN THE FORMS MORE THAN 90 MINUTES AFTER THE WATER HAS BEEN ADDED.
   6.5.4 AFTER THE MAXIMUM WATER CEMENT RATIO HAS BEEN ACHIEVED, RETEMPERING OF THE CONCRETE WILL NOT BE ALLOWED, UNLESS APPROVED BY ENGINEER.

6.6 CONCRETE PLACEMENT:

   6.6.1 DEPOSIT CONCRETE CONTINUOUSLY IN LAYERS NOT DEEPER THAN 24" OVER PREVIOUS LAYERS WHICH ARE STILL PLASTIC. AVOID COLD JOINTS. CONSOLIDATE CONCRETE BY MECHANICAL VIBRATING EQUIPMENT, SUPPLEMENTED BY HAND-SPACING, RODDING AND TAMPING. DO NOT USE MECHANICAL VIBRATORS TO TRANSPORT CONCRETE.
   6.6.2 HOT WEATHER PLACING: COMPLY WITH ACI 306, LATEST EDITION. MAINTAIN A FRESH CONCRETE TEMPERATURE OF NOT LESS THAN 50°F AND NOT MORE THAN 80°F AT THE POINT OF PLACEMENT.

6.7 CONCRETE CURING:

   COMPLY WITH ACI 308, LATEST EDITION. COMPLY WITH ACI 306 FOR HOT WEATHER CONCRETING. PROVIDE A MINIMUM OF A 7 DAY CONTINUOUS MOISTURE CURE BY COVERING CONCRETE SURFACE WITH A WET ABSORPTIVE COVER; MAINTAIN SATURATED COVER CONDITION. ALTERNATIVE CURING METHODS WILL ONLY BE ALLOWED IF APPROVED BY ENGINEER. CONTRACTOR WILL SUBMIT ALTERNATIVE CURING PRODUCTS AND METHODS FOR REVIEW AND APPROVAL. ALSO, MAINTAIN CONCRETE CURING TEMPERATURE ABOVE 50°.

   6.7.1 SLABS: USE MOISTURE CURE OR CURING COMPOUND. APPLY CURING COMPOUND WITHIN 2 HOURS OF FINAL FINISHING BY SPRAY OR ROLLER. RECOAT AREAS SUBJECT TO HEAVY RAINFALL. DO NOT USE CURING COMPOUND ON SLABS WHICH WILL RECEIVE LIQUID FLOOR HARDENER OR OTHER FINISHES.

CONCRETE NOTES (CONT).

   6.7.2 FORMED SURFACES: CURE FORMED SURFACES WITH FORMS IN PLACE FOR ENTIRE CURING PERIOD, UNLESS ALTERNATE METHODS ARE APPROVED BY THE ENGINEER. CONTACT STRUCTURAL ENGINEER @ 207-878-1751 FOR ALTERNATIVE CURING METHODS. DURING COLD WEATHER CURING, PROVIDE CAST-IN THERMOMETERS FOR MONITORING CONCRETE CURING TEMPERATURE AT LOCATIONS AS DIRECTED BY ENGINEER. MAINTAIN A 50°F WITH USE OF INDIRECT HEAT OR INSULATIVE BLANKETS.

6.8 ANCHOR BOLTS: USE TYPE, SIZE, AND LENGTH AS INDICATED ON PLANS.

EARTHWORK NOTES

1. SITE WORK AND CONCRETE CONTRACTORS ARE REQUIRED TO REVIEW THE ONSITE SUBSURFACE SOIL CONDITIONS WITH THE SER AT THE START OF INITIAL CONSTRUCTION. SITE CONTRACTOR WILL NOTIFY SER AFTER EXCAVATION HAS STARTED AND PRIOR TO THE PLACEMENT OF ANY STRUCTURAL FOUNDATIONS.
2. REMOVE ALL TOPSOIL AND UNCONTROLLED FILL FOR THE AREAS RECEIVING BUILDING FOUNDATIONS.
3. BACKFILL TO THE NECESSARY SUBGRADES REQUIRED ON THE STRUCTURAL FOUNDATION PLANS WITH CONTROLLED STRUCTURAL FILL MATERIAL MEETING THE FOLLOWING GRADATION:

PERCENT PASSING	SCREEN OR SIEVE SIZE
6	100
3	90-100
NO. 4	35-70
NO. 40	5-35
NO. 200	0-5

4. PLACE CONTROLLED STRUCTURAL FILL IN UNIFORM LIFTS AND COMPACT TO A MINIMUM OF 95% OF THE MAXIMUM DENSITY IN ACCORDANCE WITH ASTM D1557 "MODIFIED PROCTOR DENSITY".
5. PROVIDE SITE GRADING AROUND THE PERIMETER OF THE BUILDING TO PROVIDE POSITIVE DRAINAGE AWAY FROM THE FOUNDATION DURING AND AFTER CONSTRUCTION .
6. MAINTAIN THE INTEGRITY OF NATURAL SOILS AND CONTROLLED STRUCTURAL FILLS DURING CONSTRUCTION. PROTECT FOOTING AND STRUCTURE SUBGRADES AGAINST FREEZING AND EXCESSIVE WETTING. REMOVE AND REFILL FROZEN SUBGRADES, MOISTURE CONDITION, OR REPLACE EXCESSIVELY WET SUBGRADE MATERIALS.
7. NOTIFY ENGINEER TO OBSERVE SUBGRADES PRIOR TO PLACING FOOTINGS. FOOTINGS ARE DESIGNED FOR A MIN. SOIL BEARING CAPACITY OF 2000PSF, OR FOR BEARING ON SOUND LEDGE.
8. CONTRACTOR SHALL IMMEDIATELY NOTIFY ENGINEER IF LEDGE IS ENCOUNTERED TO DETERMINE PINNING REQUIREMENTS.
9. ALL FOOTINGS SHALL EXTEND A MINIMUM OF 4'-6" BELOW EXTERIOR FINISHED GRADE, OR BE DOWELED TO LEDGE
10. PROOF ROLL SUBGRADE PRIOR TO SLAB CONSTRUCTION. PROVIDE STRUCTURAL FILL MEETING THE GRADATION SPECIFIED HEREIN FOR FILL MATERIALS BELOW THE SLAB, MAXIMUM PERCENT PASSING 200 SIEVE = 5%.
11. COMPACT CONTROLLED STRUCTURAL FILLS IN ACCORDANCE WITH THE FOLLOWING SCHEDULE AND ASTM D1557. USE ONLY HAND-OPERATED EQUIPMENT ADJACENT TO WALLS. FILL BOTH SIDES OF WALLS TO EQUAL ELEVATIONS BEFORE COMPACTING.

    DEGREE OF COMPACTION: COMPACT TO THE FOLLOWING MINIMUM DENSITIES:

FILL AND BACKFILL LOCATION	DENSITY
UNDER STRUCTURE FOUNDATIONS	95% OF MAX.
EMBANKMENTS	90%
PIPE BEDDING	92%
BESIDE STRUCTURE FOUNDATION WALLS, TANK WALLS AND RETAINING WALLS	90%
UNDER PIPES THROUGH STRUCTURAL FILLS	90%
UNDER DRAIN FILTER SAND	92%

    MAXIMUM DENSITY: ASTMD1557, MODIFIED.

12. CONTRACTOR IS REQUIRED TO CONFORM TO OSHA (29 PART 1926.650-652) SUBPART P "CONSTRUCTION STANDARD FOR EXCAVATIONS".

WOOD FRAMING NOTES

1. STRUCTURAL LUMBER: No. 2 SPRUCE-PINE-FIR OR BETTER LAMINATED VENEER LUMBER (LVL): EQUIVALENT TO 2.0E 3150FB BY BOISE OR EQUAL.
2. DESIGN CODES:
   A. NATIONAL DESIGN SPECIFICATIONS FOR WOOD CONSTRUCTION BY THE NATIONAL FOREST PRODUCTS ASSOCIATION.
3. FASTENERS: COMPLY WITH RECOMMENDED FASTENING SCHEDULE OF THE IRC 2009 BUILDING CODE, UNLESS SHOWN OTHERWISE ON THE DRAWINGS.
4. FASTENER REQUIREMENTS FOR ROOF SHEATHING. PROVIDE 8D RINGSHANKG NIALS AS FOLLOWS, UNLESS SHOWN OTHERWISE:
   6" O.C.: ALONG ALL PANEL EDGES
   12" O.C.: ALONG INTERMEDIATE MEMBERS
5. SHEATHING: APA STR 1 RATED SHEATHING, EXPOSURE 1 OR BY ADVANTECH.
   ROOF: MIN 19/32", SPAN RATING 40/20.
   WALL: MIN ½" ADVANTECH 3/4" SPAN RATING
7. FASTENER REQUIREMENTS FOR EXTERIOR WOOD SHEARWALLS. PROVIDE 8D RINGSHANKG NIALS AS FOLLOWS, UNLESS SHOWN OTHERWISE:
   4" O.C.: ALONG ALL PANEL EDGES
   12" O.C.: ALONG INTERMEDIATE MEMBERS
8. ALL BOLTED WOOD CONNECTIONS TO BE MADE WITH G90 HOT DIP GALVANIZED HEX HEAD THROUGH BOLTS. SIZE AS INDIATED ON THE DRAWINGS. DOME HEADED CARRIAGE BOLTS ARE NOT PERMITTED.
9. ALL NAILS TO SIMPSON PRODUCTS AND PT LUMBER TO BE G90 HOT DIP GALVANIZED 0.162"Ø COMMON BOX NAILS, OR AS RECOMMENDED BY SIMPSON.
10. ALL SIMPSON PRODUCTS IN CONTACT WITH PT LUMBER TO BE "ZMAX" (G185 GALVANIZED) COATED.
11. TRIPLE LVLS TO BE CONNECTED WITH (2) ROWS SIMPSON ¼"x4½" SDS SCREWS 8" O.C. STAGGERED, EA FACE

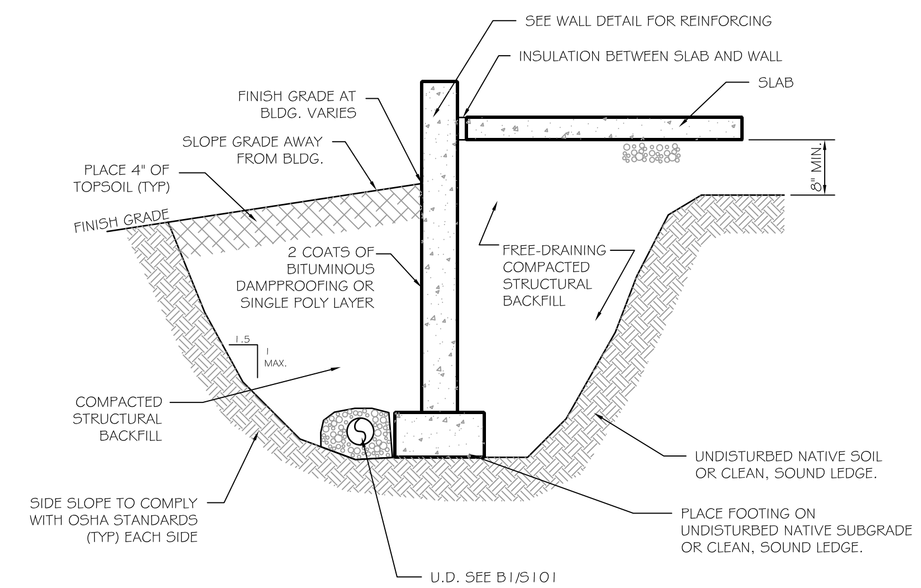

*ENGINEER TO REVIEW AND APPROVE BACKFILL MATERIAL PRIOR TO PLACEMENT.

B2 TYPICAL FOUNDATION WALL EARTHWORK
SCALE: ½" = 1'-0"

MINIMUM FROST COVER FOR SOIL SUPPORTED FOUNDATIONS IS 4'-6" OF CLEAN (LESS THAN 5% FINES PASSSING A #200 SIEVE), GRANULAR, FREE DRAINING BACKFILL.

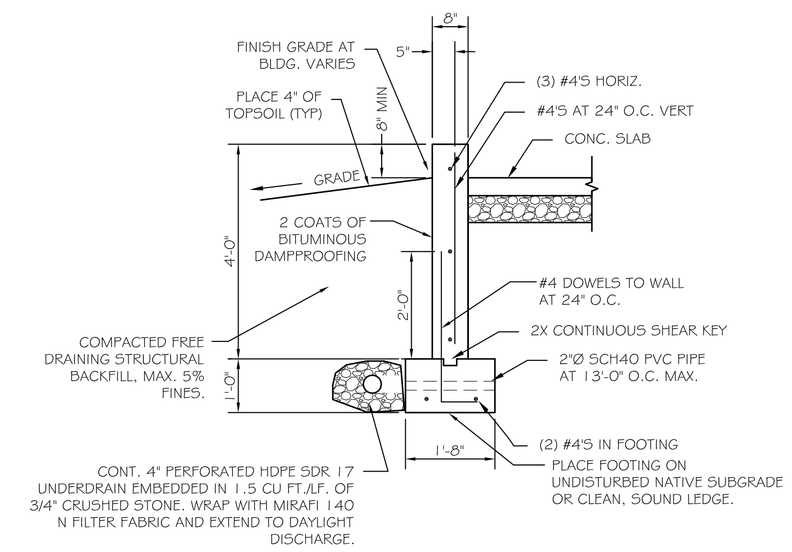

B1 TYPICAL FOUNDATION WALL REINFORCING
SCALE: ½" = 1'-0"

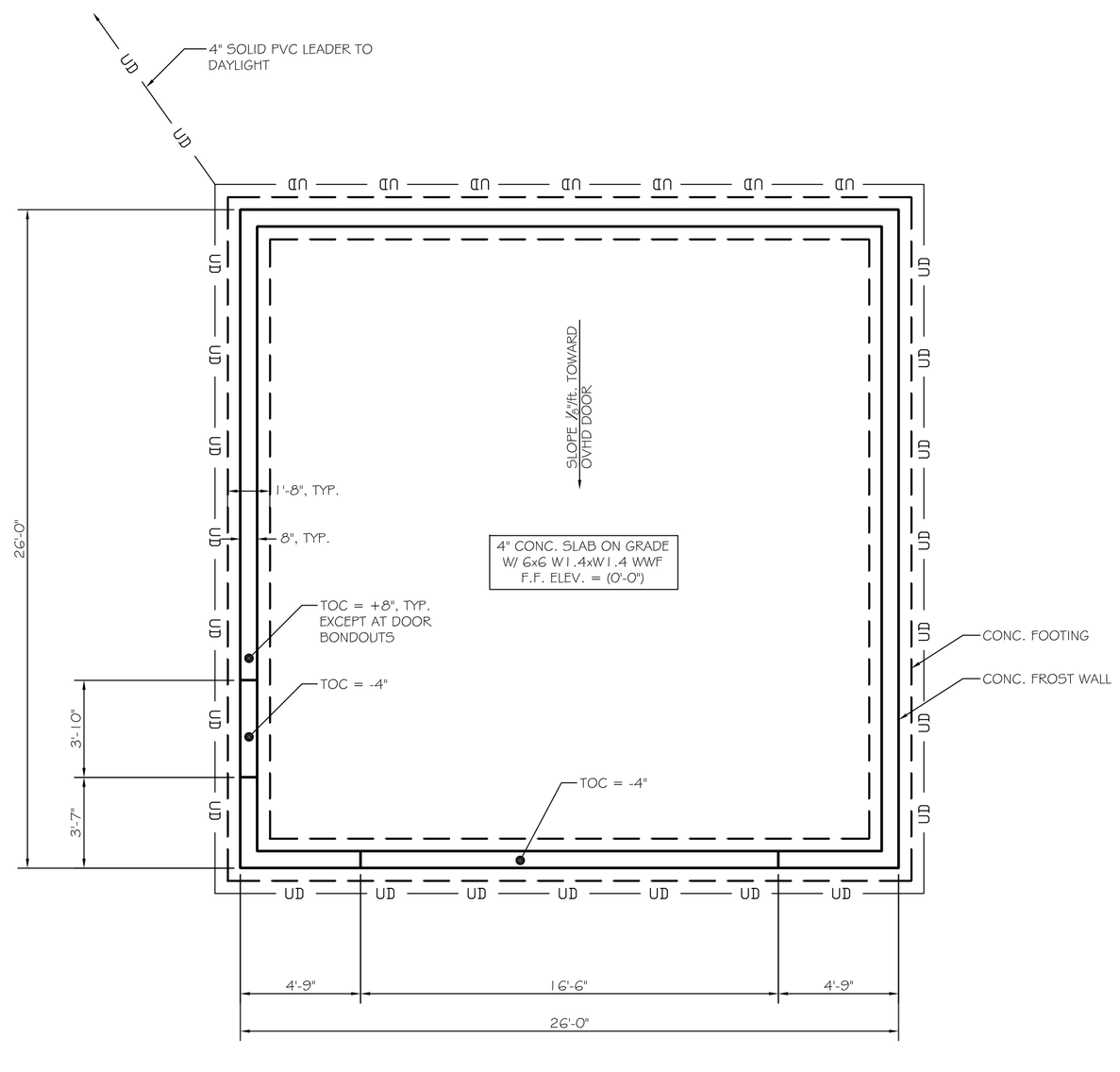

FOUNDATION NOTES:

1. TOF INDICATES TOP OF FOOTING
2. TOC INDICATES TOP OF CONCRETE
3. —— UD —— INDICATES 4" HDPE SDR 17 PERFORATED PVC UNDERDRAIN (SHOWN SCHEMATICALLY). CORRUGATED FLEXIBLE UNDERDRAIN PIPE IS NOT ACCEPTABLE. SLOPE TO DAYLIGHT DISCHARGE.
4. F.F. INDICATES FINISHED FLOOR.
5. CONTRACTOR COORDINATE SUMP PIT LOCATION.
6. SUB-SLAB RADON GAS COLLECTION SYSTEM DESIGN BY OTHERS.
7. FOUNDATION DESIGN BASED ON ASSUMED ALLOWABLE SOIL BEARING CAPACITY OF 2000psf. NOTIFY OWNER & ENGINEER IF UNSUITABLE NATIVE SOIL IS ENCOUNTERED.
8. ALL COLUMN FTG's & PIERS TO BE CENTERED ON COLUMNS
9. ALL LVL's ARE 2.0E, 3150FB BY BOISE CASCADE, UNLESS OTHERWISE NOTED.
10. PROVIDE CAP AND BASE PLATES WITH POSITIVE CONNECTIONS AT ALL LALLY COLS.

A2 FOUNDATION NOTES

A1 FOUNDATION PLAN
SCALE: ¼" = 1'-0"

ASSOCIATED DESIGN PARTNERS INC.
80 Leighton Road
Falmouth, Maine 04105
Office: (207) 878-1751
Fax: (207) 878-1788
E-Mail: adp@adpengineering.com

THIS DRAWING, DESIGN AND ELECTRONIC FILE ARE THE PROPERTY OF ASSOCIATED DESIGN PARTNERS, INC. THE REPRODUCTION, COPYING OR ANY OTHER USE OF THIS DOCUMENT WITHOUT WRITTEN CONSENT IS PROHIBITED.

PROJECT: DETACHED ACCESSORY GARAGE
PORTLAND, MAINE
FOR: DOUG CANDAGE BUILDER INC.

SHEET TITLE: FOUNDATION PLAN AND DETAILS
ISSUED FOR PERMITTING

REVISIONS			
No.	BY	DESCRIPTION	DATE

DATE : 4/12/17
SCALE : AS NOTED
DESIGN BY: ASW
DRAWN BY: RSC
FILE #:
PROJECT NUMBER: 13345
SHEET NO: S101