CENTRIFUGAL UPBLAST FAN SCHEDULE

TAG	SERVES	BASIS OF DESIGN HOOD (SEE FS DRAWINGS)	GREENHECK MODEL	TYPE	DRIVE	CFM	HOOD SP (IN. WC.)	TOTAL SP (IN. WC.)	MAX RPM	ELECTRICAL						MAX SONES	WEIGHT (LBS.)	DAMPER	NOTES
										MAX BHP	MOTOR HP	MOTOR SPEED	VFD FURN. BY	DISC. SWITCH FURN BY	VOLTS/ PH				
EF-18	HOOD 18 - KETTLES	GAYLORD ELX-GBD-AS	CUBE-180-15	GREASE	BELT	2,860	0.85"	1.25"	1089	1.05	1.5	1,725	DIV 23	DIV 23	460/3	14.5	200	BDD	
EF-25	HOOD 25 - COOKING	GAYLORD ELX-GBD-AS	CUBE-180-15	GREASE	BELT	3,030	0.68"	1.25"	1145	1.17	1.5	1,725	DIV 23	DIV 23	460/3	15.5	200	NONE	
EF-41	HOOD 41 NEW DW	GAYLORD	CUBE-121-5	HEAT/MOISTURE	BELT	1,200	0.25"	0.75	1408	0.3	0.5	1,725	DIV 23	DIV 23	460/3	12.6	120	BDD	
EF-45	HOOD 45 EXIST DW	EXIST CAPTIVE AIRE VH1	CUBE-141-7	HEAT/MOISTURE	BELT	900	0.25"	0.75	1553	0.25	1/3	1,725	DIV 23	DIV 23	460/3	9.2	80	BDD	

NOTES:

1. BELT DRIVE FANS SHALL BE SELECTED WITH MEDIUM DRIVE LOSS

LOUVER SCHEDULE

TAG	MAKE - MODEL	AIR SYSTEM	DUTY	CFM	DIMENSIONS							BEGINNING POINT OF WATER PENETRATION AT 0.01	MAX P.D. MAX W.C.	SCREEN	NOTES
					HEIGHT (in.)	WIDTH (in.)	MIN. FREE AREA (SF)	GROSS VELOCITY (FT/MIN)	NET VELOCITY (FT/MIN)	% FREE AREA	BLADE DEPTH				
L-1	RUSKIN ELF6375DX	MAU-1	INTAKE	8,000	72	72	21.53	222.2	371.6	59.8%	6"	1,023 FPM	0.05	SEE SPEC	

REGISTERS - GRILLES - DIFFUSERS (RGD) SCHEDULE

TAG	PRICE MODEL	TYPE	NECK SIZE	FACE SIZE	CFM RANGE	MAX TOTAL P.D. (IN.W.C.)	MAX NC LEVEL	BORDER TYPE	BLOW	NOTES
S-1	ASCDA	ALUM .SQ. CEILING SUPPLY DIFFUSER	6" DIA	24" X 24"	0-150	0.07"	16	LAY-IN	4-WAY, ADJUSTABLE	
S-2	ASCDA	ALUM. SQ. CEILING SUPPLY DIFFUSER	8" DIA	24" X 24"	151-275	0.07"	19	LAY-IN	4-WAY, ADJUSTABLE	
S-3	ASCDA	ALUM. SQ. CEILING SUPPLY DIFFUSER	10" DIA	24" X 24"	276-440	0.07"	22	LAY-IN	4-WAY, ADJUSTABLE	
S-4	ASCDA	ALUM. SQ. CEILING SUPPLY DIFFUSER	12" DIA	24" X 24"	441-630	0.07"	24	LAY-IN	4-WAY, ADJUSTABLE	
S-5	520D	STEEL DOUBLE DEFL. SUPPLY REGISTER	10" X 6"	10" X 6"	181-240	0.10"	23	SURFACE MT.	ADJUSTABLE	
R-1	610Z	ALUM RETURN GRILLE, 3/4" SPACING, 0 DEG VANES	48" X 22"	46" X 20"	1901 - 3125	0.05"	24	SURFACE MT.	----------	
R-2	610Z	ALUM RETURN GRILLE, 3/4" SPACING, 0 DEG VANES	48" X 22"	46" X 20"	1901 - 3125	0.05"	24	LAY-IN	----------	

MAKE-UP AIR UNIT SCHEDULE

INDOOR UNIT:	MUA-1
MANUFACTURER	GREENHECK
DESCRIPTION	DIRECT FIRED
MODEL	DGX-118-H32
WEIGHT	1,800
DESIGN AIRFLOW, cfm	8,000
MINIMUM OUTSIDE AIRFLOW REQ'T	20%
ESP, in.wc.	.75
BHP	4.7
HP	7.5
RPM	882
HEATING	
FUEL	NAT GAS
FUEL PRESSURE	0.5 PSI
GAS CONNECTION	1" NPT
EAT - LAT, deg-F.	-7F - 78.2F
LP INPUT (MBH)	800
LP OUTPUT (MBH)	736
EFFICIENCY	92.0%
HEATER TURNDOWN	15 to 1
FILTERS	MERV 8
SOUND	
LWA	85
DBA	74
SONES	24
ELECTRICAL	
VOLTAGE/HZ/PHASE	460/3/60
STARTER TYPE	VFD BY MUA MFR.
DISCONNECT	PROVIDED BY DIV 26
UNIT MCA	14.6 A
UNIT MOP	25 A
NOTES:	

160 Veranda Street
Portland, Maine 04103
T: 207.221.2260
F: 207.221.2266
Web: www.allied-eng.com

Allied Engineering
Structural Mechanical Electrical Commissioning

STATE OF MAINE — IAN A. MACDONALD No. 6980 — LICENSED PROFESSIONAL ENGINEER

E1 MECHANICAL SCHEDULES

NONE

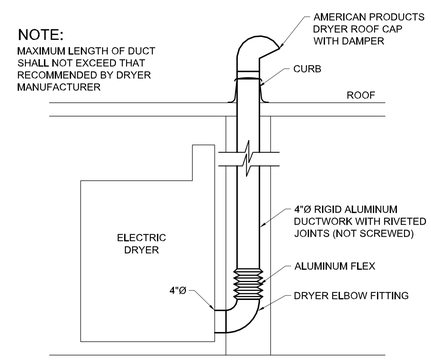

C1 DETAIL ~ DRYER VENT

NONE

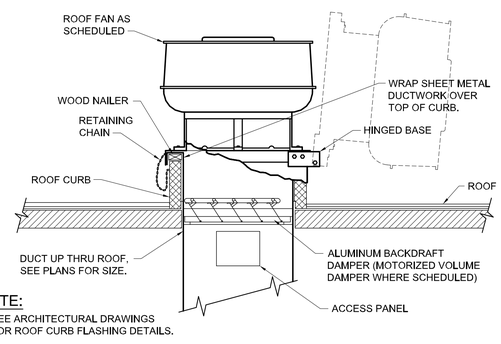

C3 DETAIL ~ ROOF TOP EXHAUST FAN EF-41 & 45

NONE

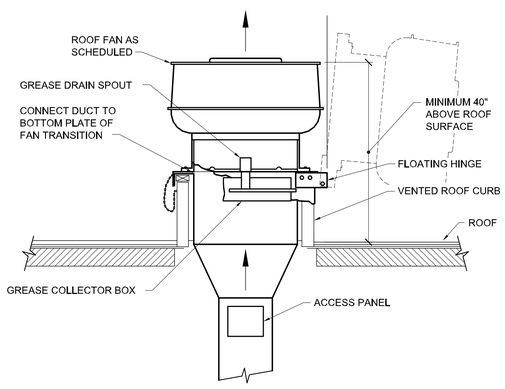

C6 DETAIL ~ ROOF TOP KITCHEN EXHAUST FAN EF-18 & 25

NONE

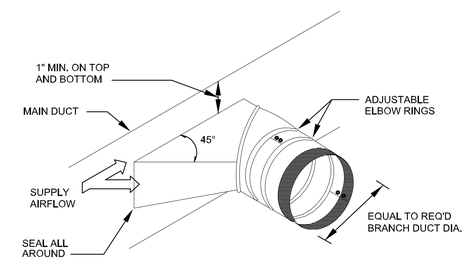

C8 DETAIL ~ ROUND BRANCH TAKE-OFF FITTING

NONE

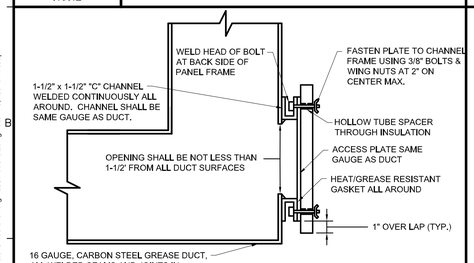

GENERAL NOTES:

1. ACCESS PANELS SHALL BE OF THE SAME MATERIAL AND THICKNESS AS THE DUCT.
2. ACCESS PANELS SHALL HAVE A GASKET OR SEALANT THAT IS RATED FOR 1500°F AND SHALL BE GREASETIGHT.
3. FASTENERS SUCH AS BOLTS, WELD STUDS, LATCHES, OR WING NUTS, USED TO SECURE THE ACCESS PANELS SHALL BE CARBON STEEL OR STAINLESS STEEL AND SHALL NOT PENETRATE DUCT WALLS.
4. LISTED GREASE DUCT ACCESS DOOR ASSEMBLIES (ACCESS PANELS) SHALL BE IN ACCORDANCE WITH THE TERMS OF THE LISTING AND MANUFACTURES' INSTRUCTIONS.
5. LOCATE PER NFPA 96.

A1 DETAIL ~ FIRE RATED ACCESS PANEL

NONE

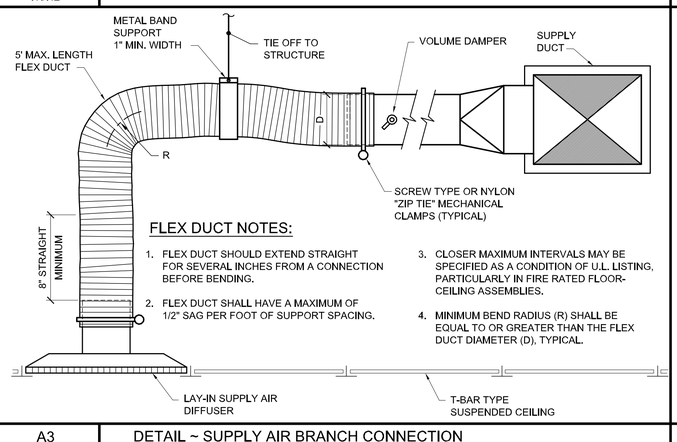

FLEX DUCT NOTES:

1. FLEX DUCT SHOULD EXTEND STRAIGHT FOR SEVERAL INCHES FROM A CONNECTION BEFORE BENDING.
2. FLEX DUCT SHALL HAVE A MAXIMUM OF 1/2" SAG PER FOOT OF SUPPORT SPACING.
3. CLOSER MAXIMUM INTERVALS MAY BE SPECIFIED AS A CONDITION OF U.L. LISTING, PARTICULARLY IN FIRE RATED FLOOR-CEILING ASSEMBLIES.
4. MINIMUM BEND RADIUS (R) SHALL BE EQUAL TO OR GREATER THAN THE FLEX DUCT DIAMETER (D), TYPICAL.

A3 DETAIL ~ SUPPLY AIR BRANCH CONNECTION

NONE

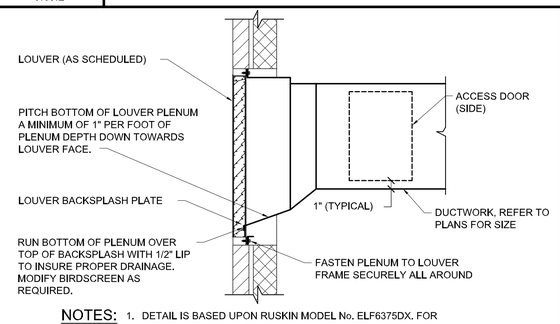

NOTES:

1. DETAIL IS BASED UPON RUSKIN MODEL No. ELF6375DX. FOR ALTERNATE MANUFACTURERS, COORDINATE AS REQUIRED FOR WEATHERTIGHT INSTALLATION PER MANUFACTURER'S RECOMMENDATIONS.
2. COORDINATE LOUVER FRAME CONSTRUCTION WITH SIDING MANUFACTURER TO INSURE PROPER FLASHING CAPABILITIES FOR A WEATHERTIGHT INSTALLATION.
3. SEAL BOTTOM OF PLENUM WATER TIGHT.

A6 DETAIL ~ INTAKE LOUVER

NONE

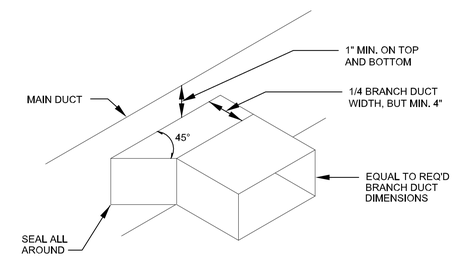

A8 DETAIL ~ SQUARE BRANCH TAKE-OFF FITTING

NONE

REVISIONS

NUMBER	DATE	BY	DESCRIPTION

Date: 03/20/2013
Drawn By: SCL
Checked By: IAM
Project Mgr: IAM
Project No: 13001
Cad File: 13001M.DWG
Graphic Scale: 0 1"

MECHANICAL SCHEDULES DETAILS AND NOTES

CITY OF PORTLAND
PORTLAND PUBLIC SCHOOLS - CENTRAL KITCHEN
92 WALDRON WAY, PORTLAND, MAINE

© COPYRIGHT 2013 ALLIED ENGINEERING, INC.

MH-500

N:\Projects\2013\13001 - Portland Public Schools - Central Kitchen\00 Drawing Files\13001M.dwg Mar 19, 2013 - 4:00pm