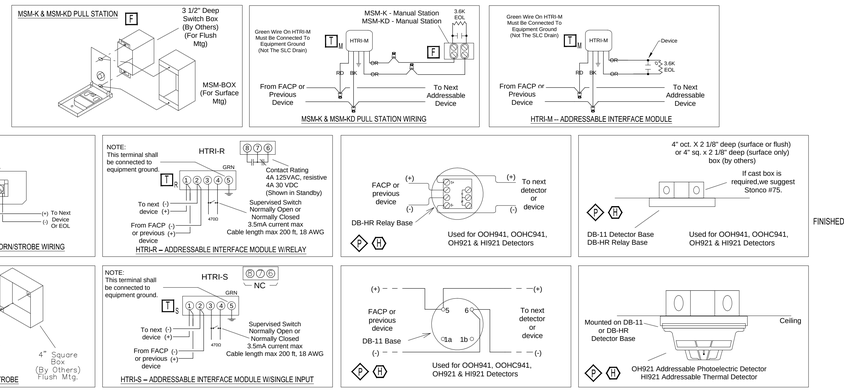

DEVICE WIRING DETAIL

SCALE: N.T.S.

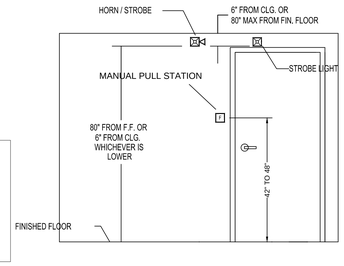

DEVICE ELEVATION DETAIL

NOT TO SCALE

SYMBOL LEGEND

QTY	SYMBOL	DESCRIPTION	MODEL	BACK BOX
1	FACP	FIRE ALARM CONTROL PANEL	FC-901	ENCLOSURE
1	NAC	NAC POWER EXTENDER	PAD-4	ENCLOSURE
1	MST	RADIO MASTER BOX	AES	ENCLOSURE
1	S XX	SMOKE DETECTOR/BASE	OH921/ DB-11	SINGLE GANG OR OCTOGON BOX
14	F XX	MANUAL PULL STATION	MSM-KD/ HTRI-M	3.5" DEEP SINGLE GANG
12	cd	MULTI-CANDELA HORN/STROBE	ZH-MC-R	4" SQUARE
2	cd	HORN/STROBE (CEILING)	ZH-MC-CR	4" SQUARE
2	T 4	4 INPUT/OUTPUT MODULE	FDCIO422	4 11/16" SQUARE
1	cd	MULTI-CANDELA STROBE	ZR-MC-R	4" SQUARE

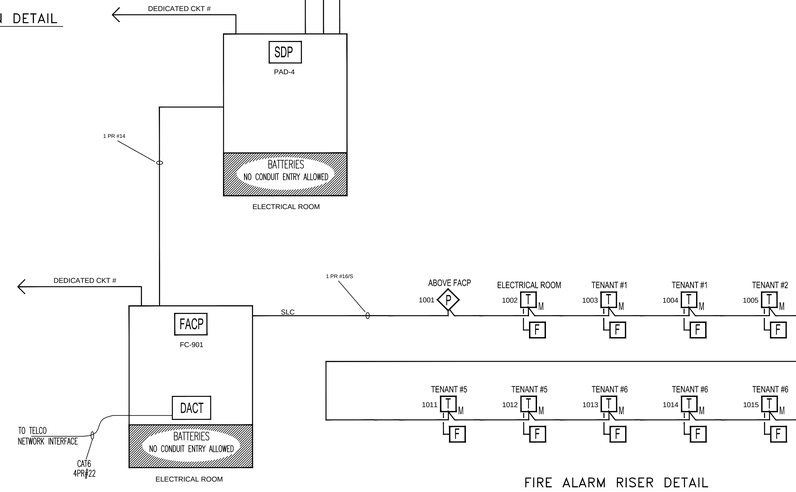

FIRE ALARM RISER DETAIL

SCALE: N.T.S.

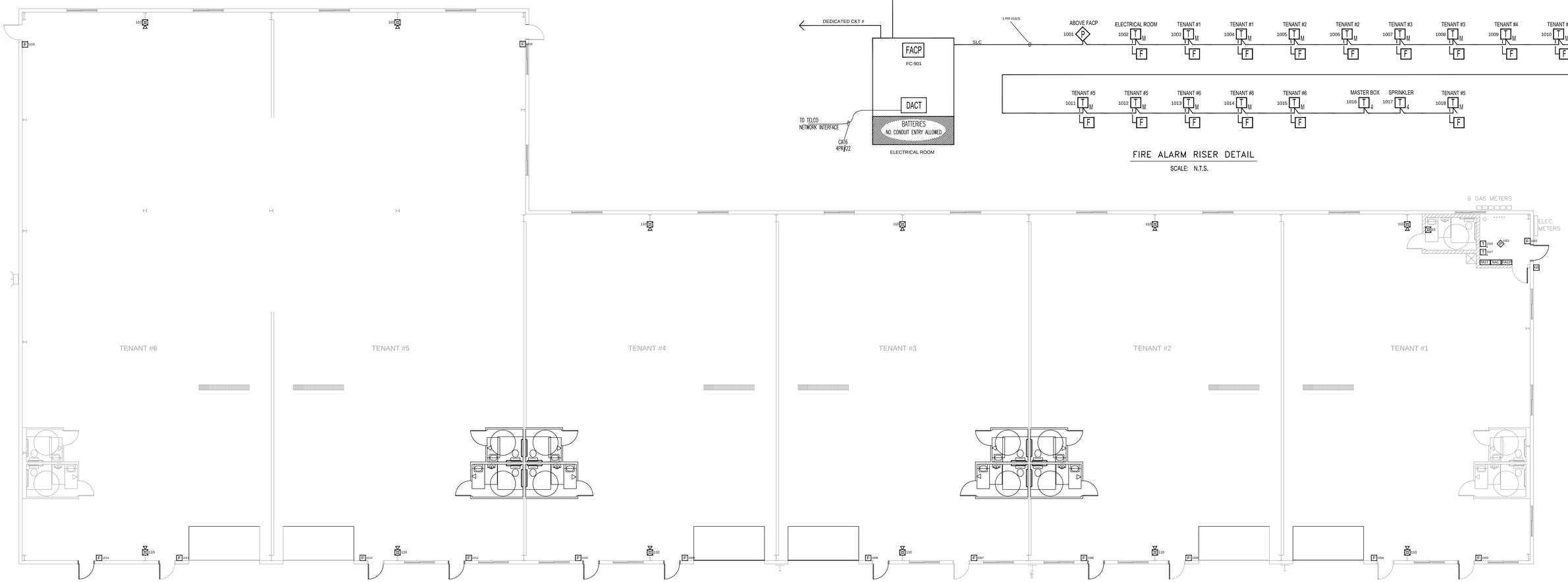

FIRE ALARM SYSTEM LAYOUT – 1ST FLOOR

SCALE: 1/8"=1'

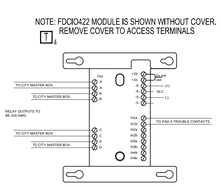

ELECTRICAL ROOM – CITY BOX DETAIL

SCALE: NTS

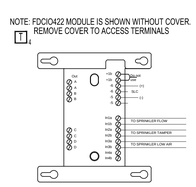

ELECTRICAL ROOM – SPRINKLER DETAIL

SCALE: NTS

GENERAL NOTES	DATE	REVISIONS	REQUIRED APPROVALS		421 WARREN AVE	FIRE ALARM SYSTEM
			OWNER			PLANS & DETAILS
			STATE FIRE MARSHAL			DWG. NO. FA-1
			LOCAL FIRE DEPARTMENT		PORTLAND, ME	
			DRAWN BY	CRM	CONTRACT WITH: ELECTRICAL SYSTEMS OF MAINE	JOB NUMBER
			CHECKED BY	BWB	EASTERN FIRE SERVICES, INC.	SCALE AS SHOWN
			CONTRACTOR LICENSE #		AUBURN/LEWISTON INDUSTRIAL AIRPARK, AUBURN, MAINE 04210	DATE 7/9/14