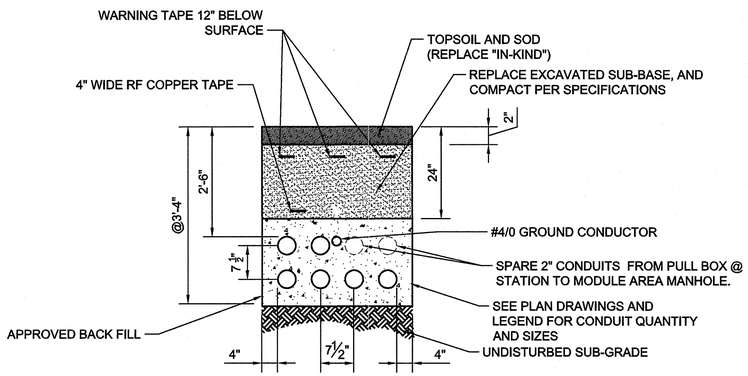

13 TYPICAL ELECTRICAL DUCT SECTION
SCALE: NONE

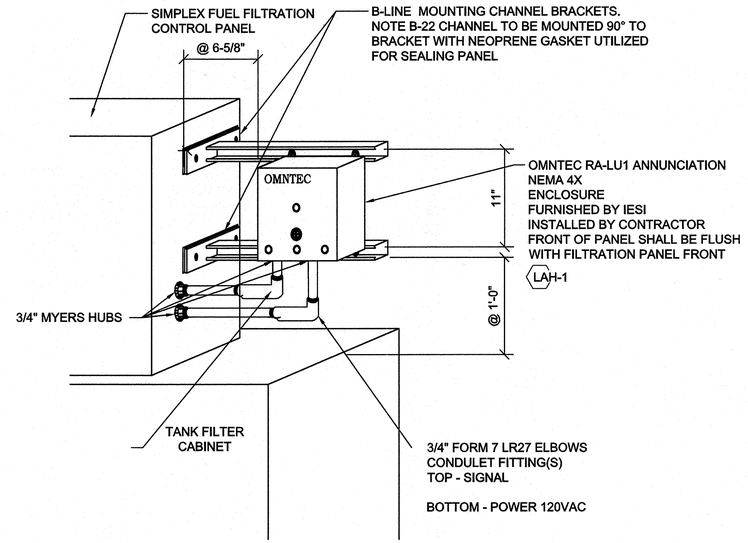

14 LOCAL ANNUNCIATOR MOUNTING
SCALE: NONE

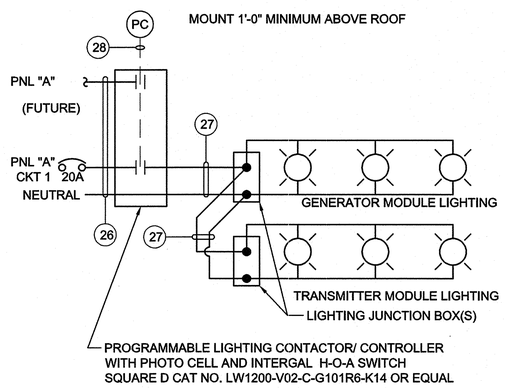

15 LIGHTING CONTACTOR DETAIL
SCALE: NONE

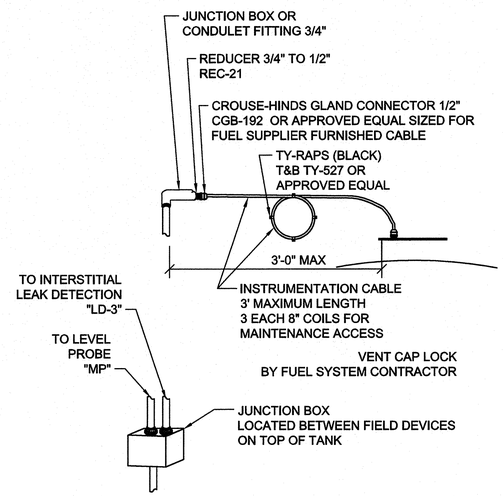

16 TANK DEVICE CONNECTION
SCALE: NONE

NOTES:

1. ALL ELECTRICAL INSTALLATIONS SHALL BE IN ACCORDANCE WITH THE 2011 EDITION OF THE NATIONAL ELECTRICAL CODE (NEC NFPA 70) AND THE OCCUPATIONAL SAFETY AND HEALTH ACT (OSHA) AND PROJECT SPECIFICATIONS AND APPLICABLE CODES AND STANDARDS.

US Army Corps of Engineers
OMAHA DISTRICT

PHASE REVIEW:
Project Manager
QC Reviewer
Architectural
Structural
Mechanical
Plumbing
Electrical
Civil

Mark	Description	Date	Appvd
0	ISSUED FOR CONSTRUCTION	11/1/12	

Designed by: SDJ
Drawn by: SDJ
Checked by: TCG
Reviewed by: MAC
Date: 2012

KBR
63 SOUTH ROYAL STREET SUITE 200
JUNEAU, ALASKA 99801
PHONE: (251) 450-7600
FAX: (251) 450-7988
KBR Engineering Services by KBR Engineering Co. LLC

FEMA

FEMA EMERGENCY RADIO NETWORK
ON WGAN PORTLAND, MAINE

INSTALLATION DETAILS

STATE OF MAINE
MICHAEL A. CARTER
No. 11379
LICENSED
PROFESSIONAL ENGINEER
11/1/12

Drawing Number:
E-504