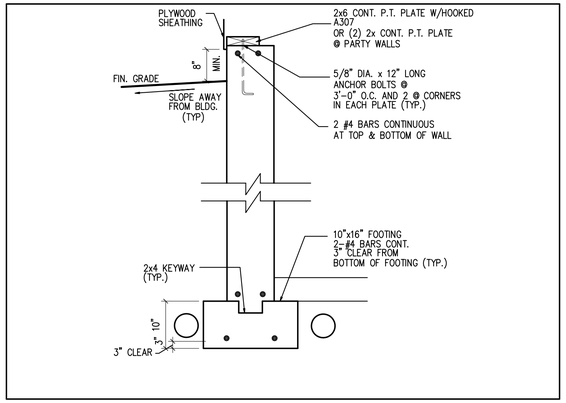

TYPICAL FOUNDATION WALL SCALE: 1"=1'-0

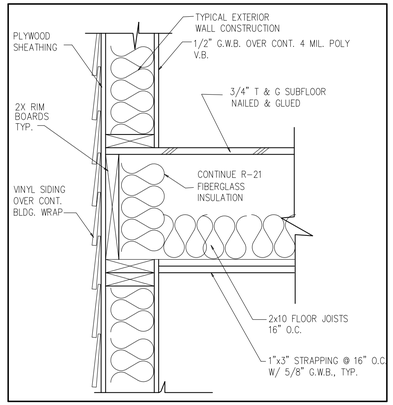

1 FLOOR FRAMING DETAIL 1 1/2" = 1'-0"

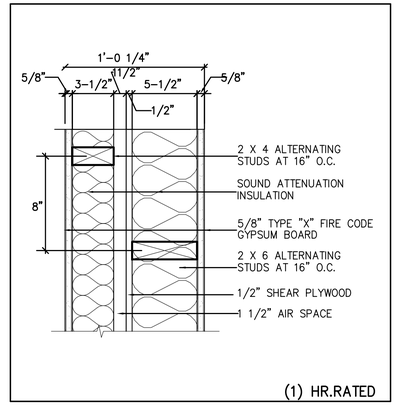

2 PARTY WALL DETAIL 1 1/2" = 1'-0" STC57 UL # U341 SIM.

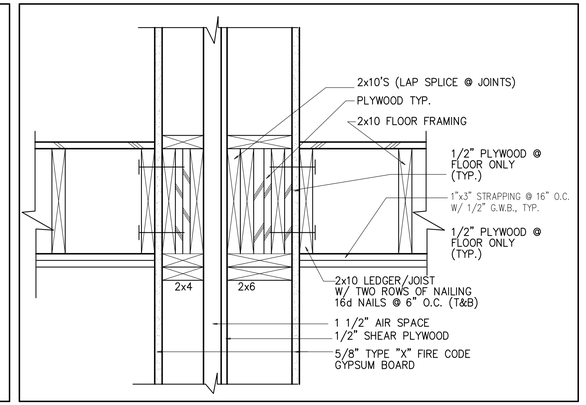

3 SECTION @ PARTY WALL DETAIL 1 1/2" = 1'-0"

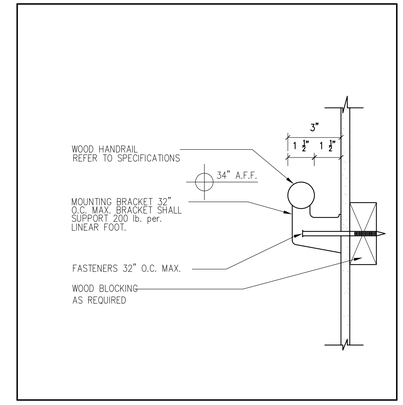

4 HANDRAIL DETAIL NTS

GENERAL NOTE FOR PARTY / SHEAR WALL:

1. PROVIDE 2x4 BLOCKING @ ALL PANEL EDGES & INTERMEDIATE.
   PROVIDE SCREWS @ 6" O.C. @ PANEL EDGES & INTERMEDIATE.
2. RUN PARTY WALL TO UNDERSIDE OF ROOF DECK (IN ATTIC SPACE) ALIGNED W/ONE OF THE 2x4 WALLS IN THE PARTY WALL BELOW.
   PROVIDE (1) LAYER 7/16" APA RATED SHEATHING ONE SIDE ONLY.
   PROVIDE 2x4 BLOCKING @ ALL PANEL EDGES.
   PROVIDE 8d NAILS @ 6" O.C. @ PANEL EDGES & INTERMEDIATE.
3. OBTAIN WRITTEN APPROVAL FROM AUTHORITY HAVING JURISDICTION FOR FIRE WALL RATING SHOWN.

MULTI- FAMILY	PLAN REVIEW	CHECKLIST
COMPONENT	SUBMITTED PLAN	FINDINGS/REVISIONS/DATES
STRUCTURAL		
FOOTING DIMENSIONS/DEPTH	10"x16" FOOTING, 10" & 8" THICK WALL, 4" CONC. SLAB	
FOUNDATION DRAINAGE, FABRIC, DAMP PROOFING	ASPHALT TAR,PIPE/DRAIN FILTER FABRIC OVER THE DRAIN	
VENTILATION/ACCESS CRAWL SPACE ONLY	N/A	
ANCHOR BOLTS/STRAPS, SPACING	5/8" DIA. x 12" LONG HOOKED A307, 3'-0" O.C. & CORNERS	
LALLY COLUMN TYPE, GIRDER & HEADER SPANS	3 1/2" DIA. LALLY COLUMN ON 24"x24" FOOTING 12" THICK MAX SPAN 5'-4"	
BUILT-UP WOOD CENTER GIRDER DIMENSIONS/TYPE	(3) 2x10 W/LEDGER	
SILL/BAND JOIST TYPE & DIMENSIONS	2x6 PRESSURE TREATED, 2x10 RIM	
FIRST FLOOR JOIST SPECIES DIMENSIONS AND SPACING	2x10 @ 16" O.C.	
SECOND FLOOR JOIST SPECIES DIMENSIONS AND SPACING	2x10 @ 16" O.C.	
ATTIC OR ADDITIONAL FLOOR JOISTS DIMENSIONS AND SPACING	ROOF TRUSSES @ 24" O.C. W/2x4 BOTTOM CHORD	
PITCH, SPAN, SPACING & DIMENSION, ROOF RAFTER: FRAMING & CONNECTIONS	6:12 ROOF TRUSSES @ 24" O.C. SPANNING 32'-0"	
SHEATHING: FLOOR, WALL AND ROOF	3/4" ADVANTACH FLOOR SHEATHING, 7/16" APA RATED WALL SHEATHING, 5/8" APA RATED ROOF SHEATHING	
FASTENER SCHEDULE	PER CODE	
GARAGE	N/A – NO GARAGE	
LIVING SPACE – FIRE SEPARATION TO GARAGE	N/A – NO GARAGE	
OPENING PROTECTION	N/A	
EMERGENCY ESCAPE AND RESCUE OPENINGS	36X24 EGRESS WINDOWS	
ROOF COVERING	25 YEAR FIBERGLASS SHINGLES	
SAFETY GLAZING	N/A	
ATTIC ACCESS	24x36 ATTIC ACCESS – REFER TO PLANS LOCATE BETWEEN ROOF TRUSSES	
CHIMNEY CLEARANCES/FIRE BLOCKING	N/A	
HEADER SCHEDULE	REFER TO HEADER SCHEDULE SHEET A2	
ENERGY EFFICIENT R-FACTORS OF WALLS, FLOORS, CEILINGS, BUILDING ENVELOPE, U-FACTOR FENESTRATION	WALLS: R-21 CEILING: R-49 FLOOR: R-21 WINDOWS: U-FACTOR .35	
TYPE OF HEATING SYSTEM	REFER TO GENERAL NOTES	
MEANS OF EGRESS		
BASEMENT	YES – BULKHEAD ACCESS	
NUMBER OF STAIRWAYS	12	
INTERIOR	6 – INCLUDING BULKHEAD STAIRS (2) PER UNIT	
EXTERIOR	6 (2) PER UNIT	
TREADS AND RISERS	7 1/2" RISE 10" TREAD; 7 3/4" RISE	
WIDTH	3'-0" CLEAR	
HEADROOM	6'-8" CLEAR +/-	
GUARDRAILS & HANDRAILS	34" WITH RETURNS	
SMOKE DETECTORS LOCATION AND TYPE/INTERCONNECTED	REFER TO GENERAL NOTES A1	
DWELLING UNIT SEPARATION	(1) HOUR DEMISING WALL SEPARATION UL#341 FIRE SEPARATION CONTINUOUS TO UNDERSIDE OF ROOF DECK	
DECK CONSTRUCTION	N/A	

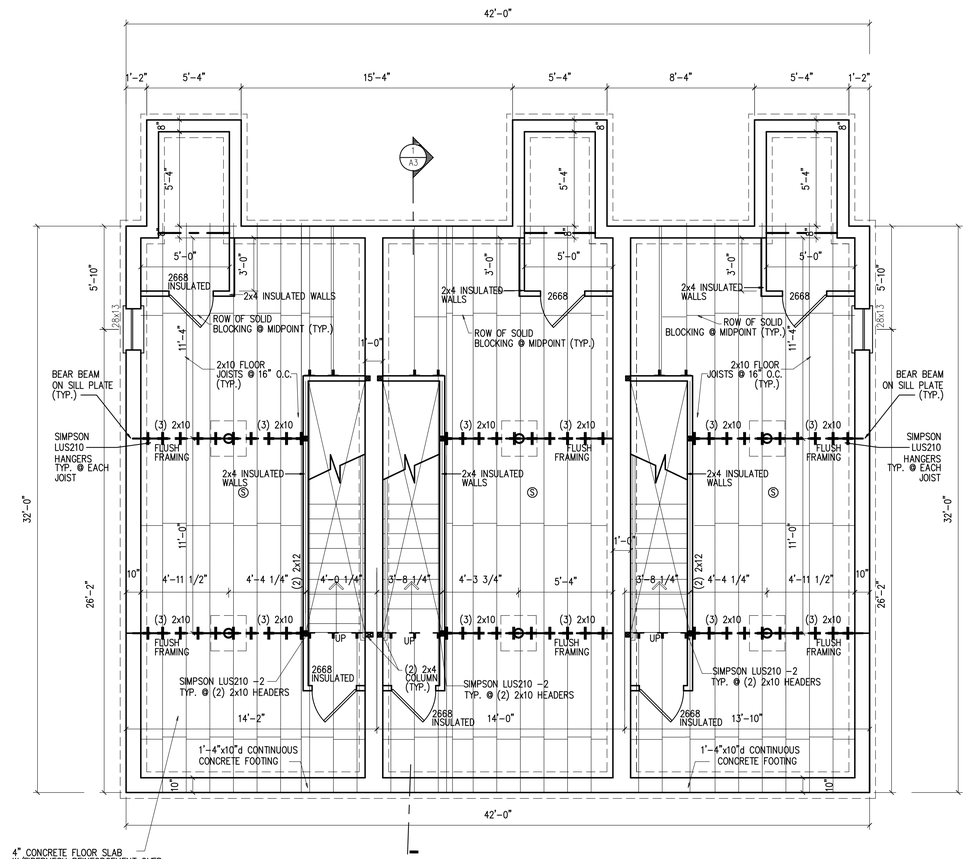

4" CONCRETE FLOOR SLAB W/FIBERMESH REINFORCEMENT OVER 6 MIL POLY VAPOR BARRIER OVER 6" COMPACTED STRUCTURAL FILL OR CRUSHED STONE ON UNDISTURBED SOIL MOIST CURE SLABS & PROVIDE CONTROL JOINTS AS SPECIFIED. (TYP.)

FOUNDATION PLAN

SCALE : 1/4" = 1' - 0"

LICENSED ARCHITECT DAVID P. DOUGLASS NO. 3000 STATE OF MAINE

42 x 32 UNIT
PORTLAND, MAINE

DRAWINGS THIS SHEET

FOUNDATION PLAN
DETAILS

DATE
01/12/12

A1