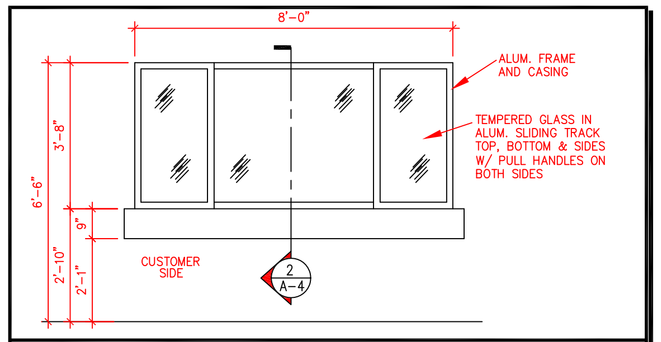

A Pass-Thru Window Type
SCALE – 3/8" = 1'-0"

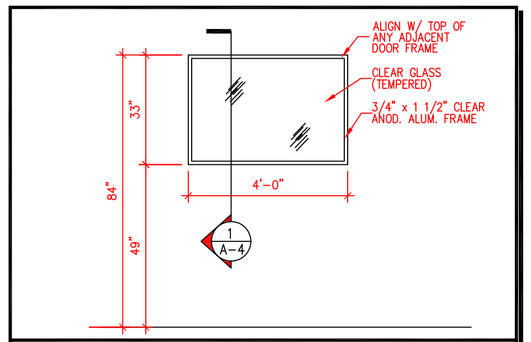

B Fixed Glass Window Type
SCALE – 3/8" = 1'-0

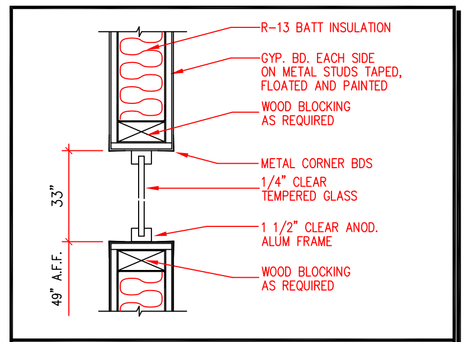

1 Section at Fixed Window Type D
SCALE – 1-1/2

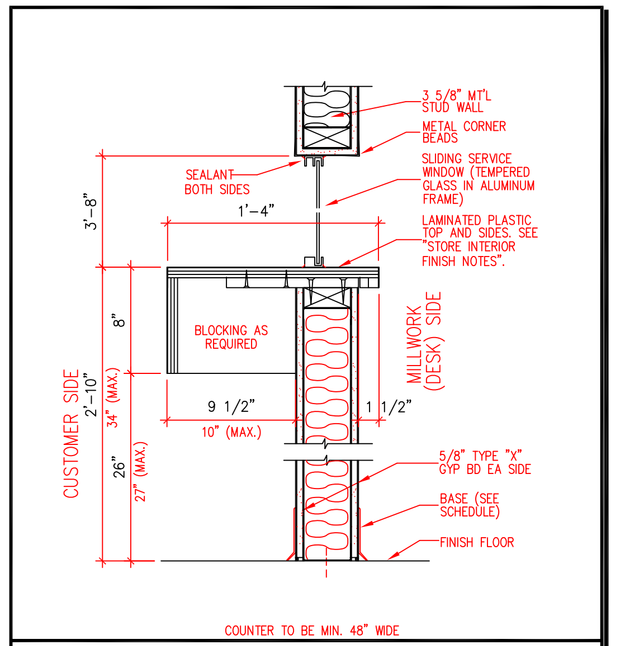

2 Section @ Pass-Thru Window
SCALE – 1-1/2" = 1'-0"

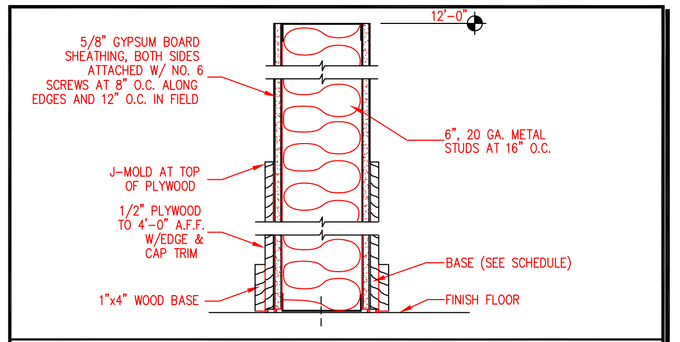

3 Wall Section
SCALE – 1-1/2" = 1'-0"
ATTACH TRACK TO CONCRETE SLAB WITH 1" POWER DRIVEN FASTENERS AT 16" O.C. MAX AND 6" AT ENDS (ICBO ER # 2388) (HILTI LOW VELOCITY X-27 20THP/35 SHOT OR EQUAL)

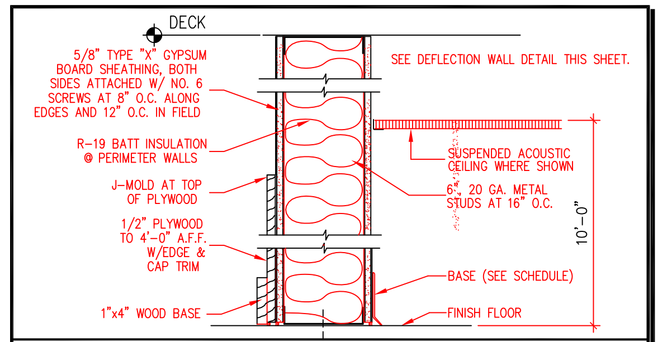

4 Wall Section
SCALE – 1-1/2" = 1'-0"
UL W415-1 HR RATED ASSEMBLY GA # WP1072
ATTACH TRACK TO CONCRETE SLAB WITH 1" POWER DRIVEN FASTENERS AT 16" O.C. MAX AND 6" AT ENDS (ICBO ER # 2388) (HILTI LOW VELOCITY X-27 20THP/35 SHOT OR EQUAL)

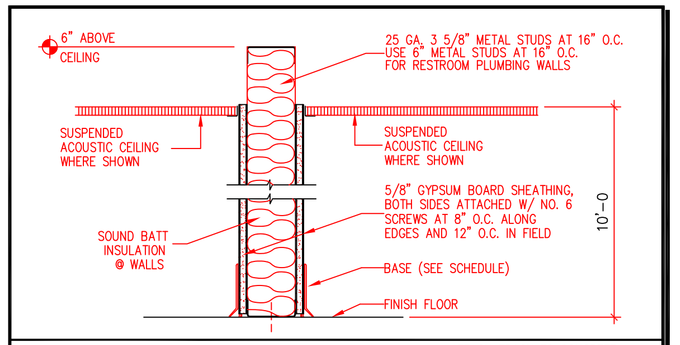

5 Wall Section
SCALE – 1-1/2"
ATTACH TRACK TO CONCRETE SLAB WITH 1" POWER DRIVEN FASTENERS AT 16" O.C. MAX AND 6" AT ENDS (ICBO ER # 2388) (HILTI LOW VELOCITY X-27 20THP/35 SHOT OR EQUAL)

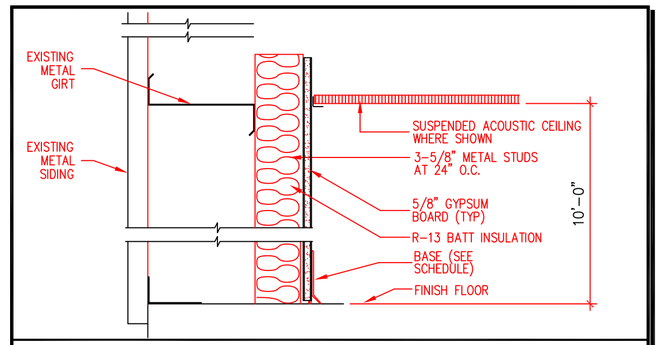

6 Wall Section
SCALE – 1-1/2" = 1'-0"

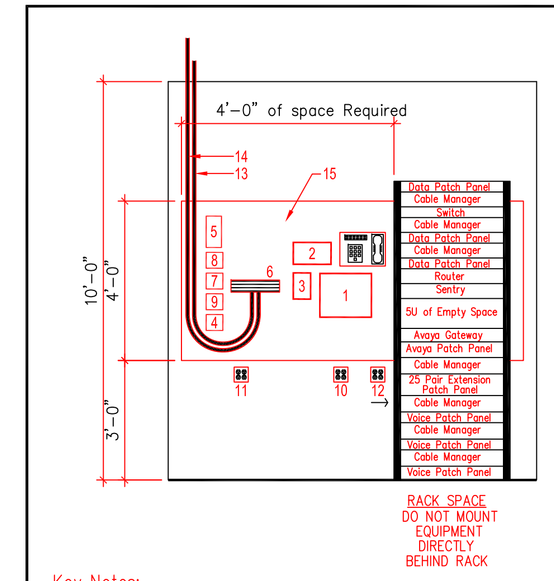

Key Notes:

1. TPU 100 – BOGEN 100-WATT AMPLIFIER
2. UPAM – UNIVERSAL PAGING ADAPTER
3. 406127 – AVAYA ANALOG MOH ADAPTER
4. JACK FOR NETWORK MODEM (POTS LINE) (TO NETWORK MODEM)
5. POTS LINES FOR SITE
   - *PTN (SPARE)
   - *SPARE
   - *ALARM
   - *PBX MODEM
6. 100 PAIR 110 BLOCK
7. NETWORK MPLS CIRCUIT (TO T1 CARD ON ROUTER)
8. JACK FOR VOICE PRI (BLUE PATCH CORD) (TO T1 CARD ON PHONE SYSTEM)
9. JACK FOR DATA BRI (RED PATCH CORD) (TO BRI MIC ON ROUTER)
10. MANDATORY 20 AMP RECEPTACLE
11. OPTIONAL 20 AMP RECEPTACLE
12. MANDATORY 20 AMP RECEPTACLE BEHIND RACK
13. 25 PAIR TO RACK
14. 25 PAIR DEMARC EXTENSION (5' COIL ABOVE CEILING)
15. 3/4" 4'X8' PLYWOOD MOUNTED TO WALL

ELECTRICAL NOTES:

RECEPTACLES MUST NOT BE MOUNTED TO BOARD. MANDATORY RECEPTACLES WILL BE 2-20 AMP CIRCUITS.

7 Phone Board Wall
SCALE – NONE

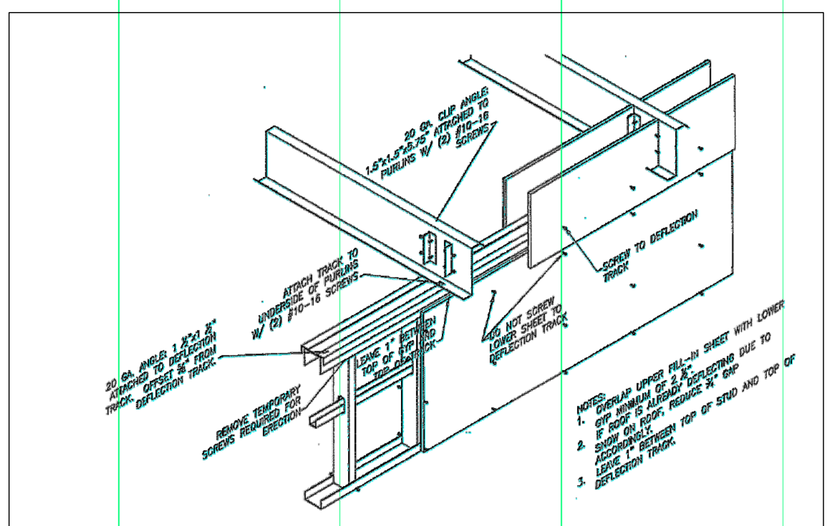

DEFLECTION WALL (PERPENDICULAR TO PURLINS)
1"=1'-0" (SEE CFM DRAWINGS FOR ADDITIONAL INFO)

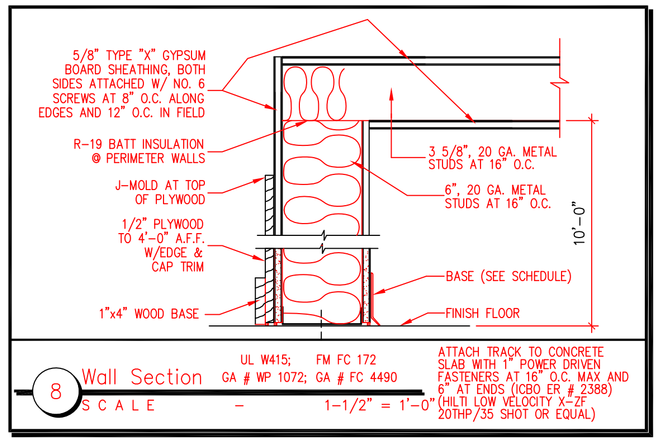

8 Wall Section
SCALE – 1-1/2" = 1'-0"
UL W415; FM FC 172 GA # WP 1072; GA # FC 4490
ATTACH TRACK TO CONCRETE SLAB WITH 1" POWER DRIVEN FASTENERS AT 16" O.C. MAX AND 6" AT ENDS (ICBO ER # 2388) (HILTI LOW VELOCITY X-27 20THP/35 SHOT OR EQUAL)

DISCLAIMER:

Drawings A-0.0, A-1-1, A-1.2, A-2.0, A-3.1, A.-3.2, A-4.0, A-5.0, A-6.0, A-7.0 were drawn by Safelite AutoGlass. The original date of these drawings (Rev.) is 03/28/16. The Sheridan Corporation replaced Safelite's title with theirs and all revisions since Rev. 1 are by Sheridan's designers. All revisions/changes by Sheridan are noted in the applicable drawing(s) revision block.

DATE	REVISION
3/21/16	1 City change (Safelite)
4/22/16	2 Sheridan title block added
5/5/16	3 DWG note added & deflection wall detail
	4

WARNING: THIS DRAWING IS THE PROPERTY AND INSTRUMENT OF SHERIDAN CORPORATION FOR USE WITH THE PROJECT IDENTIFIED BELOW. NO MODIFICATIONS OR CHANGES MAY BE MADE TO THIS DRAWING AND NO USE MAY BE MADE OF THIS DRAWING WITHOUT THE EXPRESS WRITTEN PERMISSION OF SHERIDAN CORPORATION. ANY MODIFICATION, CHANGE OR USE OF THIS DRAWING WITHOUT THE EXPRESS WRITTEN PERMISSION OF SHERIDAN CORPORATION IS WRONGFUL AND IS AT THE USER'S RISK. SHERIDAN DISCLAIMS ANY AND ALL LIABILITY FOR SUCH USE.

DRAWING STATUS

EST. NO	
SIZE	
TYPE	
DRAWN BY	RAJP
REVIEWED BY	DS
SCALE	AS NOTED
DATE	04/22/2016

ENGINEERING DESIGNS FOR
Safelite Auto Glass
421 Warren Avenue
Portland, Maine

TITLE
Sections & Details

JOB NO. 16-1003

ENGINEERING DWG. NO. A-4

DESIGN BUILDER

STATE OF MAINE
DANA C. CURTEVANCE
No. 3107
LICENSED
PROFESSIONAL ENGINEER
05-13-2016

Sheridan
www.sheridancorp.com
FAIRFIELD
PORTLAND
MAINE