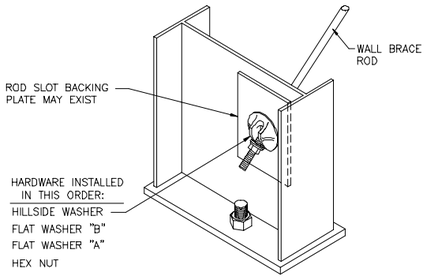

ROD DIA.	NUT	WASHERS A	WASHERS B	WASHERS HILLSIDE
3/8"	095321	096408	46040	043657
1/2"	095230	095872	095946	043657
5/8"	095233	095945	095946	043657
3/4"	095235	095946	095948	043658
7/8"	095237	095947	095948	043658
1"	095238	095948	095949	043659
1 1/8"	095239	095949	095949	043659

REV DATE:05/10/10 | REV NO 01
BR02H1
ROD BRACING THRU ROD SLOT
COLUMN SHOWN / RAFTER SIMILAR

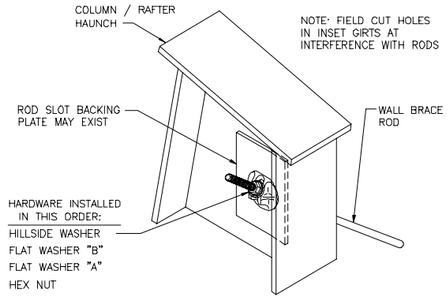

ROD DIA.	NUT	WASHERS A	WASHERS B	WASHERS HILLSIDE
3/8"	095321	096408	46040	043657
1/2"	095230	095872	095946	043657
5/8"	095233	095945	095946	043657
3/4"	095235	095946	095948	043658
7/8"	095237	095947	095948	043658
1"	095238	095948	095949	043659
1 1/8"	095239	095949	095949	043659

REV DATE:05/10/10 | REV NO 02
BR02J1
ROD BRACING THRU ROD SLOT
SIDEWALL COLUMN SHOWN / RAFTER SIMILAR

ROD DIA.	CLEVIS MARK NO.	CLEVIS PIN DIA.
3/8"	097572	1 1/4"
1/2"	097573	
5/8"	095277	
3/4"	095278	
7/8"	095279	
1"	095280	
1 1/8"	095281	
1 1/4"	095282	
1 3/8"	097593	1 1/2"
1 1/2"	097594	

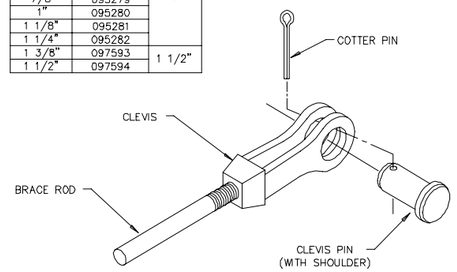

MAY BE FURNISHED WITHOUT A SHOULDER, THEN TWO COTTER PIN WILL BE PROVIDED.

REV DATE:06/23/11 | REV NO 03
BR02K1
ROD BRACING
CLEVIS ASSEMBLY

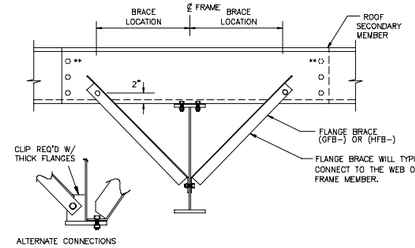

FLANGE BRACE REQUIREMENTS:

RULE#1– ALL FLANGE BRACES ON CROSS SECTIONS MUST BE INSTALLED.
RULE#2– SINGLE FLANGE BRACES ARE REQUIRED WHEN PART MARK ON CROSS SECTION IS NOT ACCOMPANIED BY (2).
RULE#3– FLANGE BRACES ARE REQUIRED BOTH SIDES OF THE FRAME WEB WHEN PART MARK IS ACCOMPANIED BY (2).
RULE#4– WHENEVER POSSIBLE, PLACE SINGLE BRACES TOWARD THE CENTER OF THE BUILDING.
RULE#5– WHENEVER POSSIBLE, PLACE ALL SINGLE BRACES ON THE SAME SIDE OF THE FRAME WEB.

** 10" & 11 1/2" PURLINS REQUIRE 3 BOLTS AT EACH END OF PURLIN LAP.

REV DATE:07/01/09 | REV NO 00
BR06AE
TYPICAL FLANGE BRACE CONNECTIONS
CONT. PURLIN LAP SHOWN, CONT. GIRT & SIMPLE PURLIN

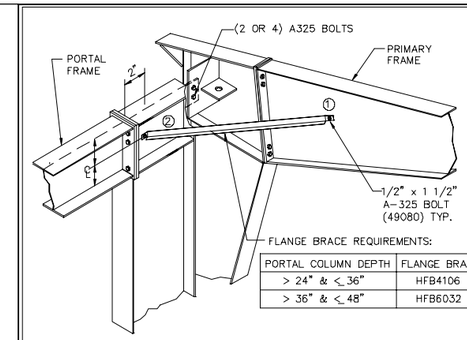

FLANGE BRACE REQUIREMENTS:

PORTAL COLUMN DEPTH	FLANGE BRACE
> 24" & <_36"	HFB4106
> 36" & <_48"	HFB6032

NOTES:
① FIELD DRILL 9/16" HOLES IN PRIMARY AND PORTAL FRAME WEBS FOR FLANGE BRACE CONNECTIONS.
② DRILL 9/16" HOLE IN PORTAL FRAME COLUMN WEB APPROX. 2" FROM BOLTING PLATE @ BEAM ℄.

REV DATE:08/18/14 | REV. NO. 02
BR12J1
PORTAL FRAME DETAIL
CONNECTION TO FRAME

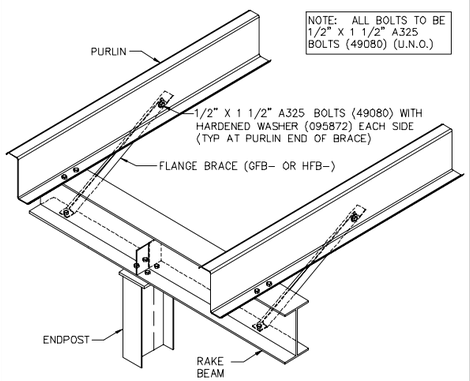

NOTE: ALL BOLTS TO BE 1/2" X 1 1/2" A325 BOLTS (49080) (U.N.O.)

REV DATE 11/16/15 | REV. NO. 03
BR25CA
ENDPOST TOP BETWEEN PURLINS
NO CAP CHANNEL – BRACED TO PURLINS ONLY

F = FEET
I = INCHES
E = EIGHTHS

G = GAGE
O = OPERATION
C = FIN/COLOR

PANEL/COVERING
W 1 3 1 1 7 2 6 1 K T D
* F F I I E G G O C C C
LENGTH CODE

INSULATION
I B 1 3 0 1 0 3 6 0 3 0 W V
* * F F F I I I I I I E C C
LENGTH WIDTH THK CODE

SECONDARY (STANDARD)
0 B Z 1 9 1 1 4 1 7 – – – – –
* * * F F I I I E G G * * * * *
DEPTH | LENGTH SHAPE | GAGE ADJUST.CODES

SECONDARY (SPECIAL)
0 0 1 0 8 Z 1 9 1 1 4 1 7 – – –
* * * * * * F F I I E G G * * *
COUNTER DEPTH& SHAPE | LENGTH | GAGE ADJUST CODES

ROD BRACING
0 3 R S 2 5 1 0
I E * * F F I I
DIA LENGTH

RS = THREADS BOTH ENDS
RT = THREADS ONE END – CLEVIS ONE END
RU = CLEVIS BOTH ENDS
RP = THREAD BOTH ENDS – NO HILLSIDES

CX*** = COLUMN (PLATE)
CGX*** = COLUMN (GAGE)
WCX*** = COLUMN (HOTROLL)

RBX*** = RAFTER (PLATE)
BGX*** = RAFTER (GAGE)
WRX*** = RAFTER (HOTROLL)
TRX*** = TRUSS RAFTER

ICX*** = INTERIOR COLUMN
PCX*** = PIPE COLUMN
TCX*** = TUBE COLUMN

EPX*** = ENDPOST (PLATE)
EGX*** = ENDPOST (GAGE)

CBX*** = CANOPY (PLATE)
CBX*** = PIGGYBACK CANOPY

DCC*** = 8 1/2" GAGE POST
DCE*** = 10" GAGE POST

REV DATE:08/29/12 | REV. NO 01
EN50B1
MARK NUMBER KEY
COMMON GENERATED MARK NUMBERS

BASIC ERECTION GUIDE REQUIRED FOR THIS PROJECT:

REFER TO:

WIDESPAN STRUCTURAL SYSTEM
2013 INSTALLATION GUIDE

REV DATE:01/30/14 | REV. NO. 00
ENB002
BASIC ERECTION GUIDE – STRUCTURAL

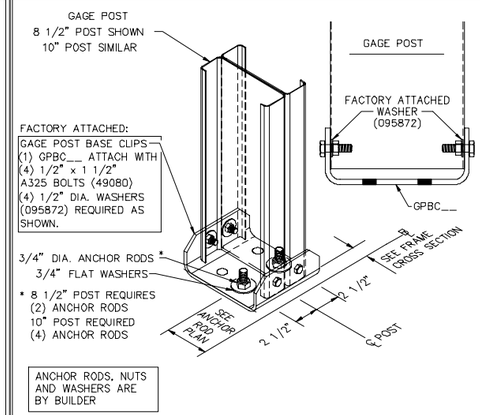

REV. DATE.06/28/13 | REV. NO. 01
PF13D2
GAGE POST BASE CONNECTION
FACTORY ATTACHED BASE CLIP

PERMIT SET- For Building Dept. Approval

1. USE 1/2 X 1 1/2 A325-N BOLT (49080) AND NUT (47120) W/O WASHERS. SNUG TIGHTEN BOLTS FOR ALL SECONDARY CONNECTIONS, SECONDARY CLIP CONNECTIONS, AND FLANGE BRACE CONNECTIONS, UNLESS NOTED OTHERWISE.
2. SLOT REINFORCEMENT PLATES NEED NOT BE LOCATED ON THE SAME SIDE OF THE WEB AS THE HILLSIDE WASHER.

THE BUTLER MFG. ENGINEER'S SEAL APPLIES ONLY TO THE WORK PRODUCT OF BUTLER MFG. AND DESIGN AND PERFORMANCE REQUIREMENTS SPECIFIED BY BUTLER. THE BUTLER MFG. ENGINEER'S SEAL DOES NOT APPLY TO THE PERFORMANCE OR DESIGN OF ANY OTHER PRODUCT OR COMPONENT FURNISHED BY BUTLER EXCEPT TO ANY DESIGN OR PERFORMANCE REQUIREMENTS SPECIFIED BY BUTLER.

THIS DRAWING, INCLUDING THE INFORMATION HEREON, REMAINS THE PROPERTY OF BUTLER MFG. IT IS PROVIDED SOLELY FOR ERECTING THE BUILDING DESCRIBED IN THE APPLICABLE PURCHASE ORDER AND SHALL NOT BE MODIFIED, REPRODUCED OR USED FOR ANY OTHER PURPOSE WITHOUT PRIOR WRITTEN APPROVAL OF BUTLER MFG.

THE GENERAL CONTRACTOR AND/OR ERECTOR IS SOLELY RESPONSIBLE FOR ACCURATE GOOD QUALITY WORKMANSHIP IN ERECTING THIS BUILDING IN ACCORDANCE WITH THIS DRAWING, DETAILS REFERENCED IN THIS DRAWING, ALL APPLICABLE BUTLER MFG. ERECTION GUIDES, AND INDUSTRY STANDARDS PERTAINING TO PROPER ERECTION, INCLUDING THE CORRECT USE OF TEMPORARY BRACING.

BUTLER MANUFACTURING
1540 GENESSEE ST. KANSAS CITY, MO 64102

REV:	DATE:	BY:	DESCRIPTION:

DRAWING SCALE: NTS

PRIMARY BRACING SEDS

BUILDER: Sheridan
CUSTOMER: Safelite
LOCATION: Portland, Maine
PROJECT: Safelite Auto
BUILDER'S PO#: 161003

Butler Manufacturing
VPC VERSION: 2015.2d

JOB #: 16-008746-01
DATE: 4/29/2016
DRAWN/CHECK: LC /
PAGE: 10