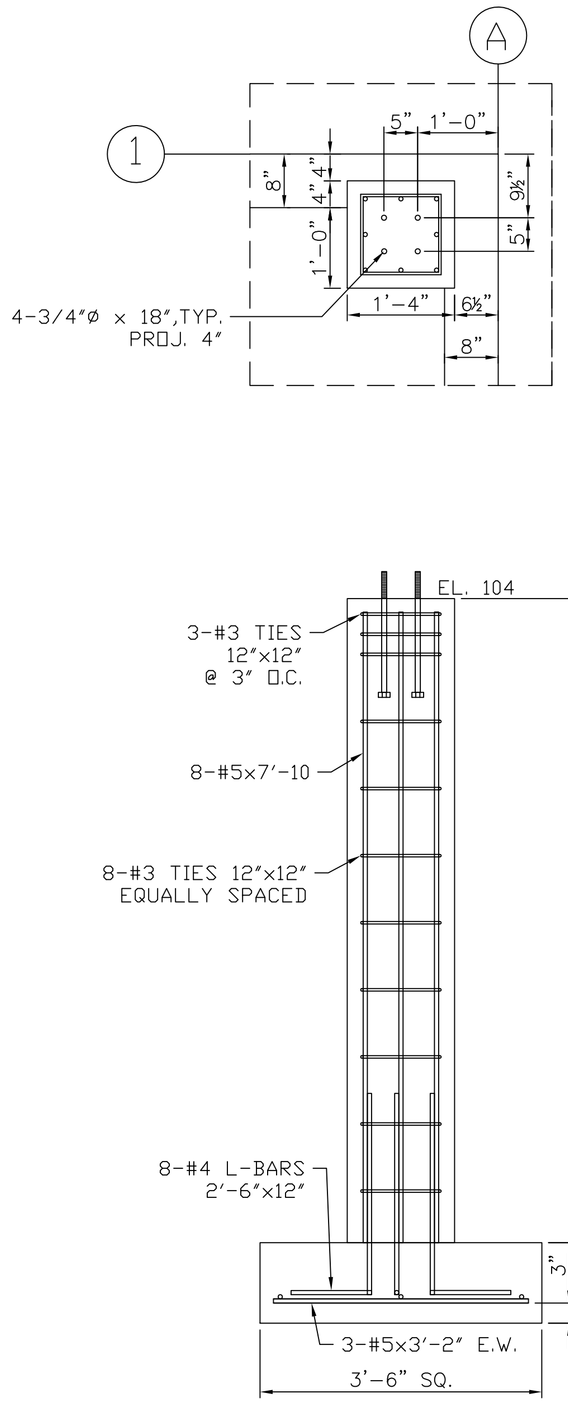

A-1 SECTION & DETAIL

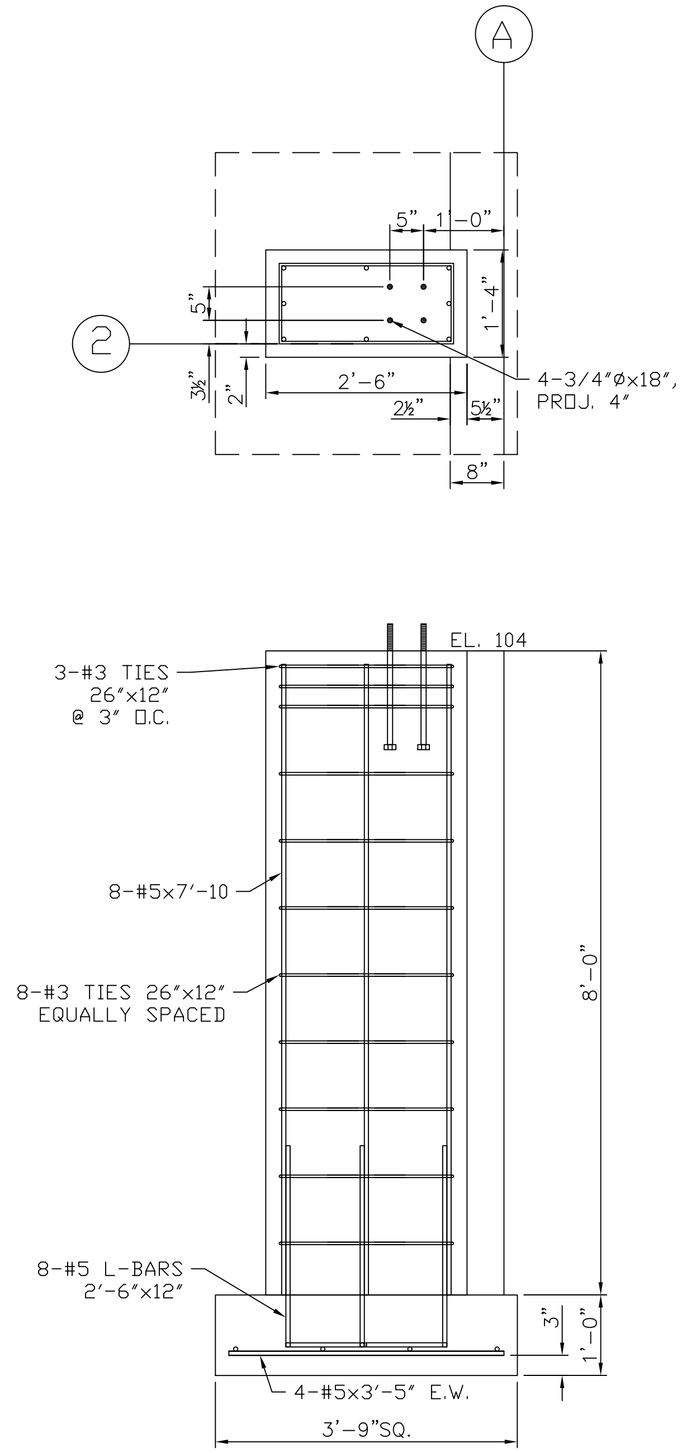

A-2 SECTION & DETAIL

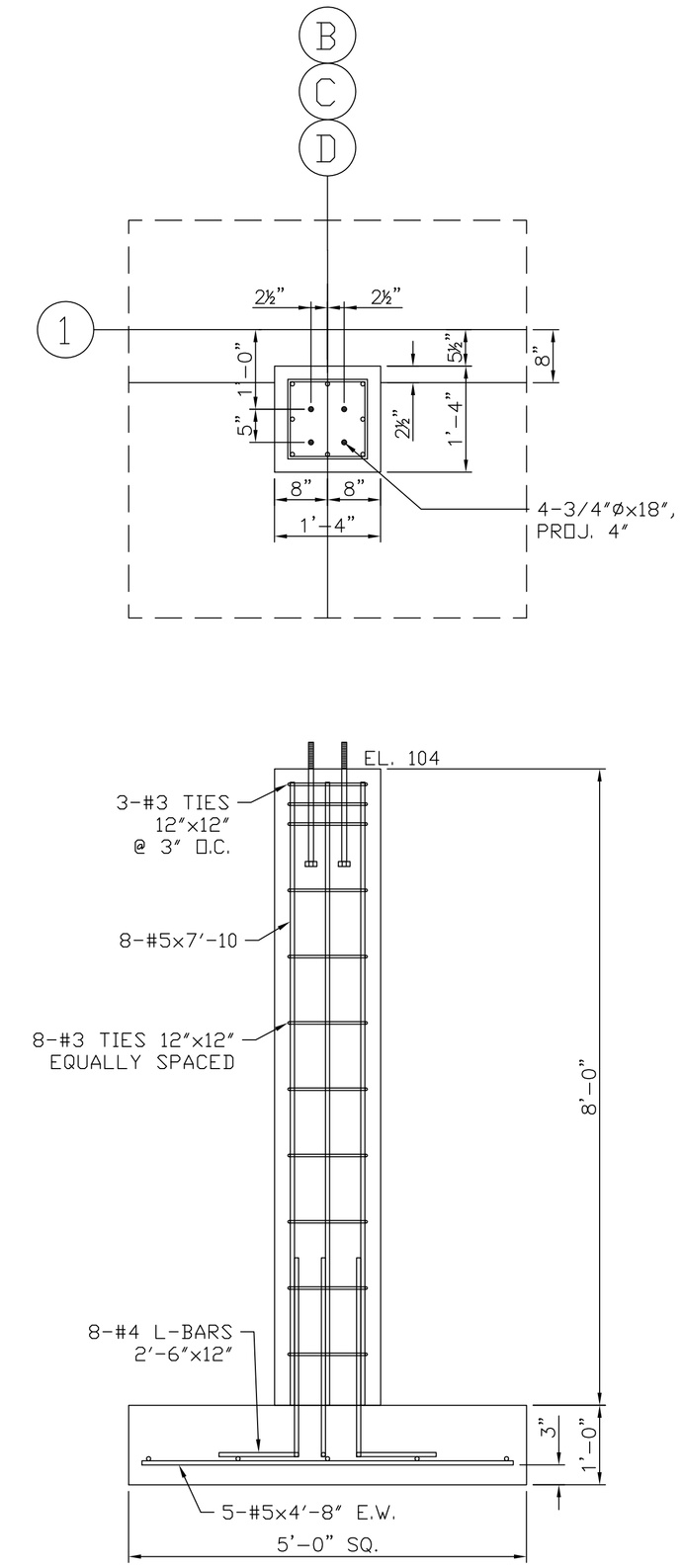

B,C,D-1 SECTION & DETAIL

DATE	REVISION

WARNING: THIS DRAWING IS THE PROPERTY AND INSTRUMENT OF SHERIDAN CORPORATION FOR USE WITH THE PROJECT IDENTIFIED BELOW. NO MODIFICATIONS OR CHANGES MAY BE MADE TO THIS DRAWING AND NO USE MAY BE MADE OF THIS DRAWING WITHOUT THE EXPRESS WRITTEN PERMISSION OF SHERIDAN CORPORATION. ANY MODIFICATION, CHANGE OR USE OF THIS DRAWING WITHOUT THE EXPRESS WRITTEN PERMISSION OF SHERIDAN CORPORATION IS WRONGFUL AND IS AT THE USER'S RISK. SHERIDAN DISCLAIMS ANY AND ALL LIABILITY FOR SUCH USE.

DRAWING STATUS

EST. NO	
SIZE	
TYPE	
DRAWN BY	RAJP
REVIEWED BY	DS
SCALE	AS NOTED
DATE	04/21/2016

ENGINEERING DESIGNS FOR
Safelite AutoGlass
421 Warren Avenue
Portland, Maine

TITLE
Foundation
Sections & Details

DESIGN BUILDER

JOB NO.
16-1003

ENGINEERING DWG. NO.
F-03

STATE OF MAINE
DANA C. CHATEVERMA
No. 3107
LICENSED
PROFESSIONAL ENGINEER

21 Apr 2016

Sheridan
www.sheridancorp.com

FAIRFIELD
PORTLAND
MAINE

N\ROGER\2016\16-0003 Safelite Auto Glass