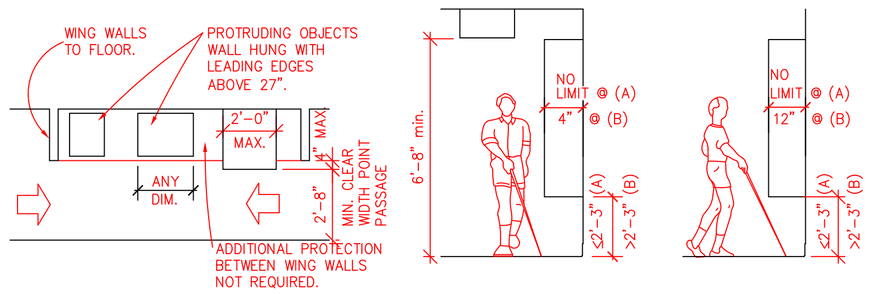

PLAN – PROTECTION AROUND MOUNTED OBJECTS

WALKING PARALLEL TO WALL MOUNTED OBJECT.

WALKING PERPENDICULAR TO WALL OR POLE MOUNTED OBJECT.

PROTRUDING OBJECTS

SEE SECTION 307 OF THE ADA FOR ADDITIONAL REQUIREMENTS ON PROTRUDING OBJECTS

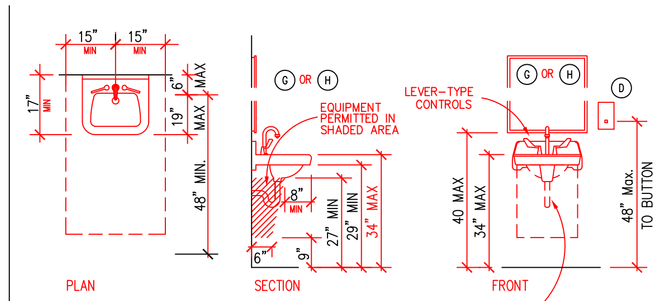

PLAN

SECTION

FRONT

WATER SUPPLY AND DRAIN PIPES UNDER LAVATORIES AND SINKS SHALL BE INSULATED OR OTHERWISE CONFIGURED TO PROTECT AGAINST CONTACT. THERE SHALL BE NO SHARP OR ABRASIVE SURFACES UNDER LAVATORIES OR SINKS. (A.D.A. 606.5)

LAVATORY AND SINKS

SEE SECTION 606 OF THE A.D.A. FOR ADDITIONAL REQUIREMENTS ON ACCESSIBLE LAVATORIES.

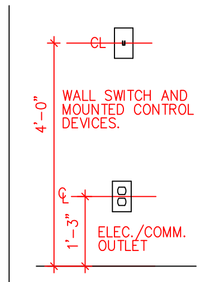

ELECTRICAL DEVICES

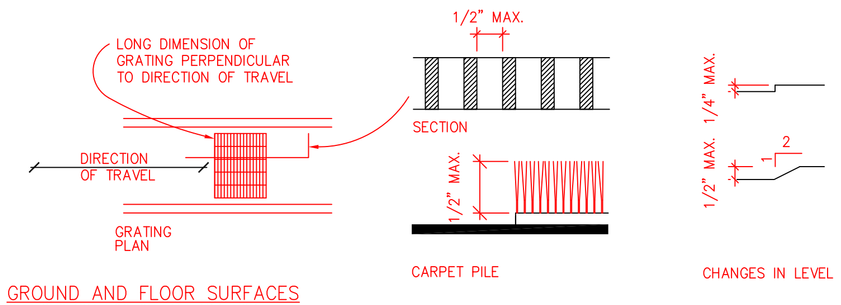

CARPET PILE

CHANGES IN LEVEL

GROUND AND FLOOR SURFACES

SEE SECTION 302 OF THE ADA FOR ADDITIONAL REQUIREMENTS ON GROUND AND FLOOR SURFACES.

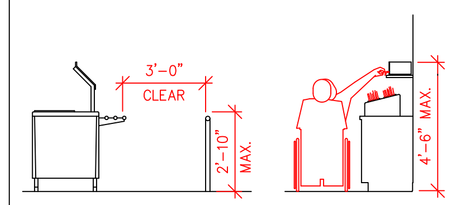

SERVING LINE

TABLEWARE AREAS

FOOD SERVICES LINES

SEE SECTIONS 227.4 AND 904.5 OF THE ADA FOR ADDITIONAL REQUIREMENTS ON FOOD SERVICE.

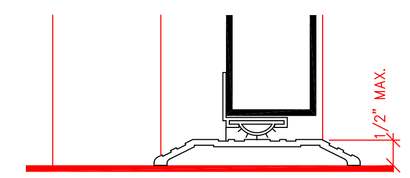

DOOR THRESHOLD DETAIL

SEE SECTION 404.2.5 OF THE ADA FOR ADDITIONAL REQUIREMENTS ON DOORS.

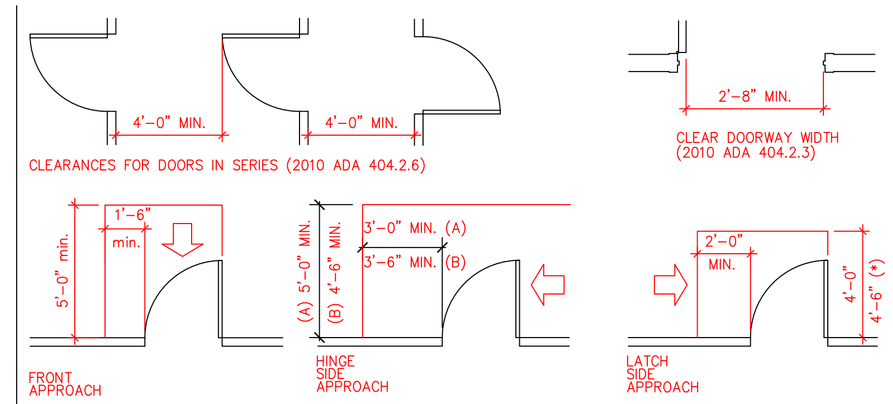

CLEARANCES FOR DOORS IN SERIES (2010 ADA 404.2.6)

CLEAR DOORWAY WIDTH (2010 ADA 404.2.3)

FRONT APPROACH

HINGE SIDE APPROACH

LATCH SIDE APPROACH

MANEUVERING CLEARANCES AT DOORS – OUTSWINGING DOORS

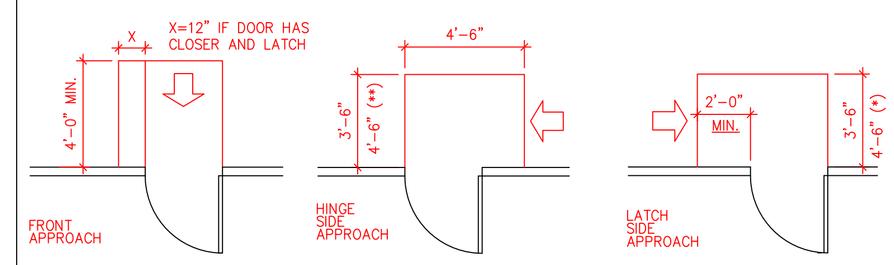

FRONT APPROACH

HINGE SIDE APPROACH

LATCH SIDE APPROACH

MANEUVERING CLEARANCES AT DOORS – INSWINGING DOORS

DOORS

SEE SECTION 404.2.4 OF THE ADA FOR ADDITIONAL REQUIREMENTS ON DOORS.

NOTE: ALL DOORS IN ALCOVES MUST COMPLY WITH THE CLEARANCES NOTED FOR FRONT APPROACHES.

(*) WITH CLOSER
(**) WITH LATCH & CLOSER

GENERAL ACCESSIBILITY NOTES:

INFORMATION SHOWN ON THIS SHEET IS THE MINIMUM REQUIRED FOR ADA (2010 ADA STANDARDS FOR ACCESSIBLE DESIGN) COMPLIANCE.

NOT ALL CONDITIONS SHOWN ON THIS SHEET MAY BE REQUIRED BY THIS PROJECT. COMPARE THE REQUIREMENTS OF THE ARCHITECTURAL DRAWINGS WITH THIS SHEET FOR RELEVANCE OF INFORMATION.

DIMENSIONS INDICATED ARE THE MINIMUM CLEAR DIMENSIONS REQUIRED BY THE TAS ACCESSIBILITY GUIDELINES. THE CONTRACTOR IS RESPONSIBLE FOR LAYOUT OF BUILDING ELEMENTS TO ASSURE THAT DIMENSIONS SHOWN ARE PROVIDED.

NOTIFY THE ARCHITECT IMMEDIATELY OF ANY DISCREPANCIES BETWEEN THE ARCHITECTURAL DRAWINGS AND THE INFORMATION GIVEN ON THIS SHEET.

DO NOT SCALE THESE DRAWINGS.

REFER, ALSO, TO FEDERAL PUBLICATION "AMERICANS WITH DISABILITIES ACT, TITLE III; PUBLIC ACCOMMODATIONS" (LATEST EDITION) AND PROJECT LOCAL GOVERNING REGULATIONS FOR COMPLETE PROJECT ACCESSIBILITY REQUIREMENTS.

SPECIAL ACCESSIBILITY REQUIREMENTS:

DOOR HARDWARE:

DOORS SHALL HAVE LEVER-OPERATED MECHANISMS, PUSH-TYPE MECHANISMS, OR U-SHAPED HANDLES.

HANDLES, PULLS, LATCHES, LOCKS, AND OTHER OPERATING DEVICES ON ACCESSIBLE DOORS SHALL HAVE A SHAPE THAT IS EASY TO GRASP WITH ONE HAND AND DOES NOT REQUIRE TIGHT GRASPING, TIGHT PINCHING, OR TWISTING OF THE WRIST TO OPERATE.

SLIDING DOORS, IF ANY, WHEN FULLY OPEN SHALL HAVE OPERATING HARDWARE EXPOSED AND USABLE FROM BOTH SIDES.

MOUNTING HEIGHT: HARDWARE REQUIRED FOR ACCESSIBLE DOOR PASSAGE SHALL BE MOUNTED NO HIGHER THAN 48" ABOVE FINISHED FLOOR.

CLOSER OPERATION: THE SWEEP PERIOD OF A CLOSER SHALL BE ADJUSTED SO THAT FROM AN OPEN POSITION OF 70 DEGREES, THE DOOR WILL TAKE AT LEAST 3 SECONDS TO MOVE TO A POINT 3" FROM THE LATCH, MEASURED TO THE LEADING EDGE OF THE DOOR.

THE MAXIMUM FORCE FOR PUSHING OR PULLING OPEN A DOOR SHALL BE AS FOLLOWS:
(A) EXTERIOR HINGED DOORS: NO REQUIREMENT.
(B) INTERIOR HINGED DOORS: 5 LBF
(C) SLIDING OR FOLDING DOORS: 5 LBF

EXCEPT THAT FIRE DOORS SHALL HAVE THE MINIMUM OPENING FORCE ALLOWABLE BY THE APPROPRIATE ADMINISTRATIVE AUTHORITY.
THESE FORCES DO NOT APPLY TO THE FORCE REQUIRED TO RETRACT LATCH BOLTS OR DISENGAGE OTHER DEVICES THAT MAY HOLD THE DOOR IN A CLOSED POSITION.

AUTOMATIC DOORS AND AUTOMATIC GATES SHALL COMPLY WITH 404.3. FULL POWERED, AUTOMATIC DOORS SHALL COMPLY WITH ANSI / BHMA A156.10 (INCORPORATED BY REFERENCE, SEE REFERENCED STANDARDS IN CHAPTER 1) LOW-ENERGY AND POWER ASSISTED DOORS SHALL COMPLY WITH ANSI / BHMA. A156.19 (1997 OR 2002 EDITION (INCORPORATED BY REFERENCE, SEE REFERENCED STANDARDS IN CHAPTER 1)
SUCH DOORS SHALL NOT OPEN TO BACK CHECK FASTER THAN 3 SECONDS AND SHALL REQUIRE NO MORE THAN 15 LBF (66.6N) TO STOP DOOR MOVEMENT. IF USER-OPERATED CONTROLS ARE PROVIDED THEY SHALL COMPLY WITH TEXAS ACCESSIBILITY STANDARDS, SECTION 4.27.

CONTROLS AND OPERATING MECHANISMS:

HEIGHT: SWITCHES, THERMOSTATS, CONTROLS, DISPENSERS, RECEPTACLES, AND THE HIGHEST OPERABLE PART OF OTHER OPERABLE EQUIPMENT SHALL BE PLACED NO HIGHER THAN 48" ABOVE THE FLOOR AND WITHIN THE REACH RANGES REQUIRED BY THE ADA (2010 ADA STANDARDS FOR ACCESSIBLE DESIGN.) RECEPTACLES OF ELECTRICAL AND COMMUNICATIONS SYSTEM ON WALLS SHALL BE MOUNTED NO LESS THAN 15" ABOVE THE FLOOR.

EXCEPTION: THESE REQUIREMENTS DO NOT APPLY WHERE THE USE OF SPECIAL EQUIPMENT DICTATES OTHERWISE OR WHERE ELECTRICAL AND COMMUNICATIONS SYSTEMS RECEPTACLES ARE NOT NORMALLY INTENDED FOR USE BY BUILDING OCCUPANTS.

FLUSH CONTROLS SHALL BE HAND OPERATED OR AUTOMATIC. CONTROLS FOR FLUSH VALVES SHALL BE MOUNTED ON THE WIDE SIDE OF TOILET AREAS NO MORE THAN 44" ABOVE THE FLOOR.

OPERATION: CONTROLS AND OPERATING MECHANISMS SHALL BE OPERABLE WITH ONE HAND AND SHALL NOT REQUIRE TIGHT GRASPING, PINCHING, OR TWISTING OF THE WRIST. THE FORCE REQUIRED TO ACTIVATE CONTROLS SHALL BE NO GREATER THAN 5 LBF.

GRAB BARS, AND TUB AND SHOWER SEATS:

THE OUTSIDE DIAMETER OR WIDTH OF THE GRIPPING SURFACES OF A HANDRAIL OR GRAB BAR SHALL BE 1-1/4" TO 1-1/2", OR THE SHAPE SHALL PROVIDE AN EQUIVALENT GRIPPING SURFACE.

IF HANDRAILS OR GRAB BARS ARE MOUNTED ADJACENT TO A WALL, THE SPACE BETWEEN THE WALL AND THE GRAB BAR SHALL BE 1-1/2".

BENDING STRESS IN A GRAB BAR OR SEAT INDUCED BY THE MAXIMUM BENDING MOMENT FROM THE APPLICATION OF 250 LBF SHALL BE LESS THAN THE ALLOWABLE STRESS FOR THE MATERIAL OF THE GRAB BAR OR SEAT.

SHEAR STRESS INDUCED IN A GRAB BAR OR SEAT BY THE APPLICATION OF 250 LBF SHALL BE LESS THAN THE ALLOWABLE SHEAR STRESS FOR THE MATERIAL OF THE GRAB BAR OR SEAT.

SHEAR FORCE INDUCED IN A FASTENER OR MOUNTING DEVICE FROM THE APPLICATION OF 250 LBF SHALL BE LESS THAN THE ALLOWABLE LATERAL LOAD OF EITHER THE FASTENER OR MOUNTING DEVICE OR THE SUPPORTING STRUCTURE, WHICHEVER IS THE SMALLER ALLOWABLE LOAD.

TENSILE FORCE INDUCED IN A FASTENER BY A DIRECT TENSION FORCE OF 250 LBF PLUS THE MAXIMUM MOMENT FROM THE APPLICATION OF 250 LBF SHALL BE LESS THAN THE ALLOWABLE WITHDRAWAL LOAD BETWEEN THE FASTENER AND THE SUPPORTING STRUCTURE.

ROTATION OF GRAB BARS WITHIN THEIR FITTINGS IS NOT ACCEPTABLE.

SHARP OR ABRASIVE ELEMENTS ARE NOT ACCEPTABLE FOR A HANDRAIL OR GRAB BAR OR ANY WALL OR OTHER SURFACE ADJACENT TO IT. EDGES SHALL HAVE A MINIMUM RADIUS OF 1/8".

SIGNAGE:

THE WIDTH-TO-HEIGHT RATIO OF LETTERS AND NUMBERS ON SIGNS SHALL HAVE A BETWEEN 3:5 AND 1:1 AND A STROKE-WIDTH-TO-HEIGHT RATIO BETWEEN 1:5 AND 1:10 USING AN UPPER-CASE "X" FOR MEASUREMENT. LOWER CASE LETTERS ARE PERMITTED.

OVERHEAD SIGN CHARACTERS AND NUMBERS SHALL BE SIZED ACCORDING TO THE VIEWING DISTANCE FROM WHICH THEY ARE TO BE READ. FOR SUSPENDED OR PROJECTED OVERHEAD SIGNS, THE MINIMUM CHARACTER HEIGHT IS 3". BRAILLED CHARACTERS AND PICTORIAL SYMBOL SIGNS (PICTOGRAMS) SHALL BE RAISED 1/32", UPPER CASE, SANS SERIF OR SIMPLE SERIF TYPE AND SHALL BE ACCOMPANIED WITH GRADE 2 BRAILLE. RAISED CHARACTERS SHALL BE AT LEAST 5/8" HIGH, BUT NO HIGHER THAN 2". PICTOGRAMS SHALL BE ACCOMPANIED BY THE EQUIVALENT VERBAL DESCRIPTION PLACED DIRECTLY BELOW THE PICTOGRAM. THE BORDER DIMENSION OF THE PICTOGRAM SHALL BE 6" MINIMUM IN HEIGHT.

FINISH: THE CHARACTERS AND BACKGROUND OF SIGNS SHALL BE EGGSHELL, MATTE, OR OTHER NON-GLARE FINISH. CHARACTERS AND SYMBOLS SHALL CONTRAST WITH THEIR BACKGROUND.

PERMANENT IDENTIFICATION SIGNS PROVIDED FOR ROOMS AND SPACES, SIGNS SHALL BE INSTALLED ON THE WALL ADJACENT TO THE LATCH SIDE OF THE DOOR. WHERE THERE IS NO WALL SPACE TO THE LATCH SIDE OF THE DOOR, INCLUDING AT DOUBLE LEAF DOORS, SIGNS SHALL BE PLACED ON THE NEAREST ADJACENT WALL. MOUNTING HEIGHT SHALL BE 60" ABOVE THE FINISH FLOOR TO THE CENTERLINE OF THE SIGN.

MOUNTING LOCATION FOR SUCH SIGNAGE SHALL BE SO THAT A PERSON MAY APPROACH WITHIN 3" OF SIGNAGE WITHOUT ENCOUNTERING PROTRUDING OBJECTS OR STANDING WITHIN THE SWING OF A DOOR.

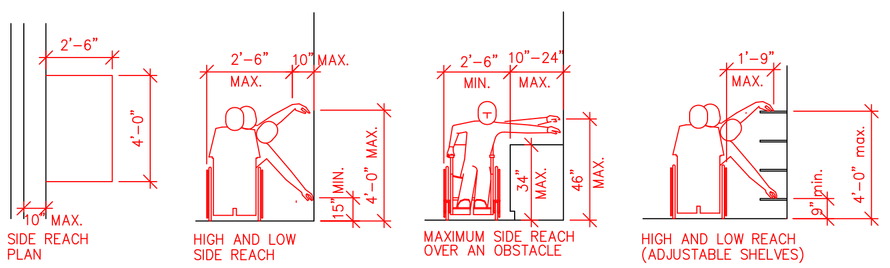

SIDE REACH PLAN

HIGH AND LOW SIDE REACH

MAXIMUM SIDE REACH OVER AN OBSTACLE

HIGH AND LOW REACH (ADJUSTABLE SHELVES)

REACH RANGES

SEE SECTION 308 OF THE ADA

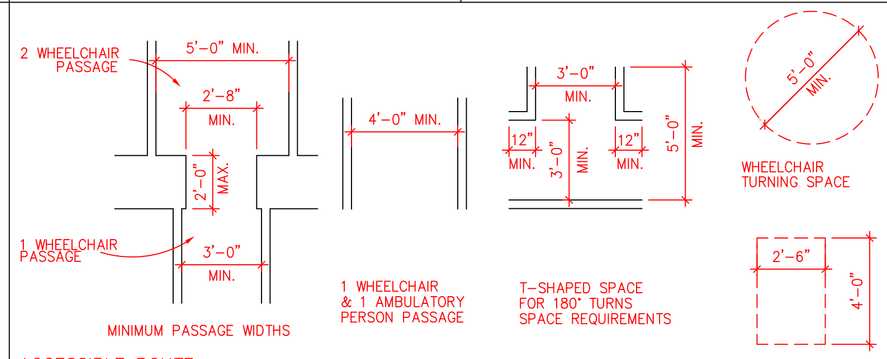

MINIMUM PASSAGE WIDTHS

1 WHEELCHAIR & 1 AMBULATORY PERSON PASSAGE

T-SHAPED SPACE FOR 180° TURNS SPACE REQUIREMENTS

WHEELCHAIR TURNING SPACE

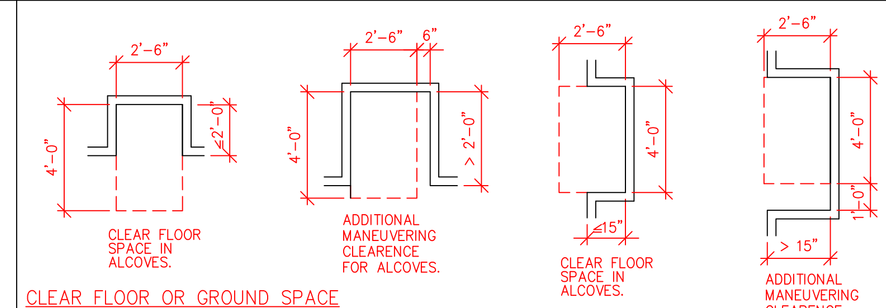

CLEAR FLOOR SPACE IN ALCOVES.

ADDITIONAL MANEUVERING CLEARENCE FOR ALCOVES.

CLEAR FLOOR SPACE IN ALCOVES.

ADDITIONAL MANEUVERING CLEARENCE FOR ALCOVES.

CLEAR FLOOR OR GROUND SPACE

SEE SECTION 305 OF THE ADA FOR ADDITIONAL REQUIREMENTS ON SPACE ALLOWANCES AND REACH RANGES.

ACCESSIBLE ROUTE

SEE SECTION 206 OF THE ADA FOR ADDITIONAL REQUIREMENTS ON ACCESSIBLE ROUTES.

CLEAR FLOOR SPACE

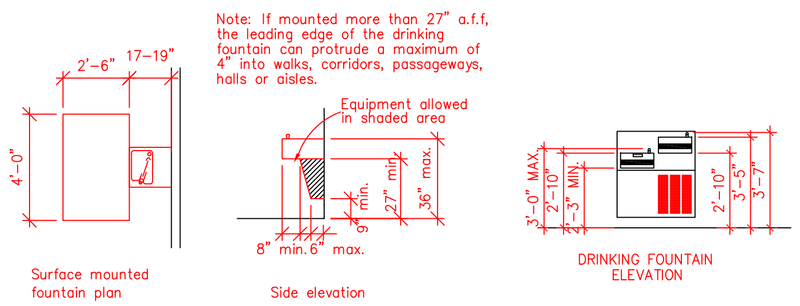

Surface mounted fountain plan

Side elevation

DRINKING FOUNTAIN ELEVATION

Drinking Fountains

See section 602 of the ADA for additional requirements on drinking fountains.

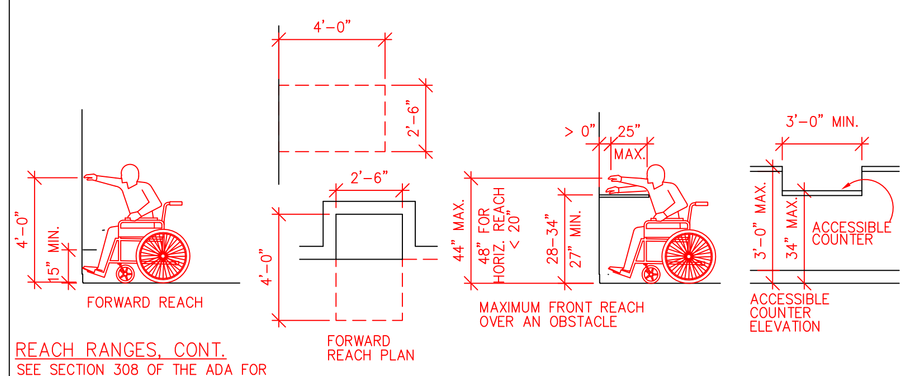

FORWARD REACH

FORWARD REACH PLAN

MAXIMUM FRONT REACH OVER AN OBSTACLE

ACCESSIBLE COUNTER ELEVATION

REACH RANGES, CONT.

SEE SECTION 308 OF THE ADA FOR ADDITIONAL REQUIREMENTS.

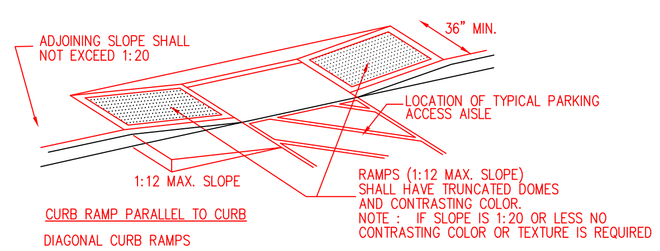

CURB RAMP PARALLEL TO CURB

DIAGONAL CURB RAMPS

A. IF DIAGONAL CURB RAMPS HAVE RETURNED CURBS OR OTHER WELL-DEFINED EDGES, SUCH EDGES SHALL BE PARALLEL TO THE DIRECTION OF PEDESTRIAN FLOW. THE BOTTOM OF DIAGONAL CURB RAMPS SHALL HAVE 48" MINIMUM CLEAR SPACE. IF DIAGONAL CURB RAMPS ARE PROVIDED AT MARKED CROSSINGS, THE 48" CLEAR SPACE SHALL BE WITHIN THE MARKINGS. IF DIAGONAL CURB RAMPS HAVE FLARED SIDES, THEY SHALL ALSO HAVE AT LEAST A 24" LONG SEGMENT OF STRAIGHT CURB LOCATED ON EACH SIDE OF THE CURB RAMP AND WITHIN THE MARKED CROSSING.

4 Handi Cap Ramp Details
SCALE – NONE

SEE SECTION 705 OF THE ADA FOR ADDITIONAL REQUIREMENTS ON DETECTABLE WARNINGS AND TRUNCATED DOMES.

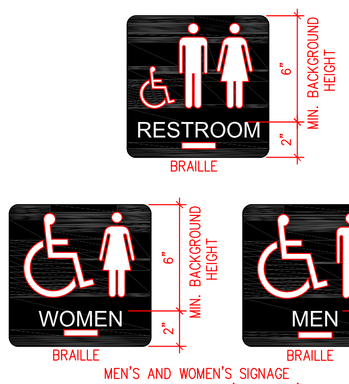

MEN'S AND WOMEN'S SIGNAGE LOCATE AT ALL MEN'S, WOMEN'S AND UNI-SEX TOILET ROOMS

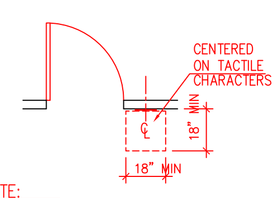

NOTE:
WHERE A TACTILE SIGN IS LOCATED BESIDE A DOOR, THE SIGN SHALL BE LOCATED ALONGSIDE THE DOOR ON THE LATCH SIDE. SIGNS CONTAINING TACTILE CHARACTERS SHALL BE LOCATED SO THAT A CLEAR FLOOR SPACE OF 18 INCHES MINIMUM BY 18 INCHES MINIMUM, CENTERED ON THE TACTILE CHARACTERS, IS PROVIDED BEYOND THE ARC OF THE DOOR SWING BETWEEN THE CLOSED POSITION AND 45 DEGREES OPEN POSITION.

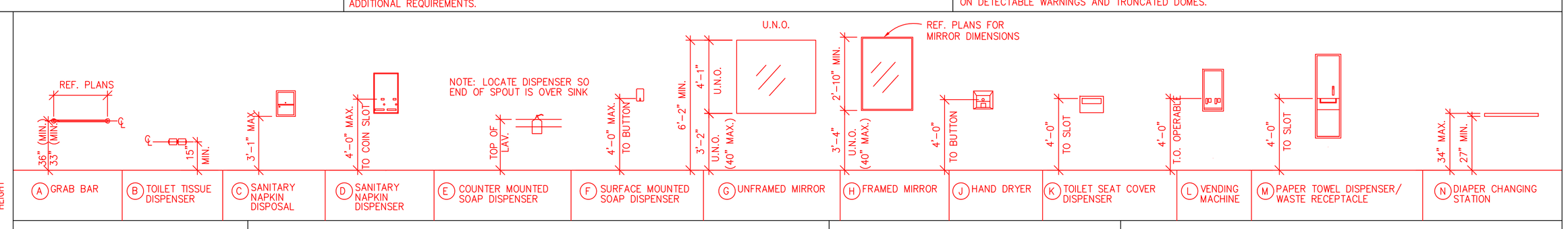

A	B	C	D	E	F	G	H	J	K	L	M	N
GRAB BAR	TOILET TISSUE DISPENSER	SANITARY NAPKIN DISPOSAL	SANITARY NAPKIN DISPENSER	COUNTER MOUNTED SOAP DISPENSER	SURFACE MOUNTED SOAP DISPENSER	UNFRAMED MIRROR	FRAMED MIRROR	HAND DRYER	TOILET SEAT COVER DISPENSER	VENDING MACHINE	PAPER TOWEL DISPENSER/ WASTE RECEPTACLE	DIAPER CHANGING STATION

FIXTURE MOUNTING DIAGRAMS

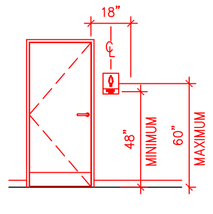

NOTE:
TACTILE CHARACTERS ON SIGNS SHALL BE LOCATED 48 INCHES MINIMUM ABOVE THE FINISHED FLOOR OR GROUND SURFACE, MEASURED FROM THE BASELINE OF THE LOWEST TACTILE CHARACTER AND 60 INCHES MAXIMUM ABOVE THE FINISHED FLOOR OR GROUND SURFACE, MEASURED FROM THE BASELINE OF THE HIGHEST TACTILE CHARACTER.

SIGNAGE

SEE SECTION 703 OF THE ADA FOR ADDITIONAL REQUIREMENTS ON SIGNS

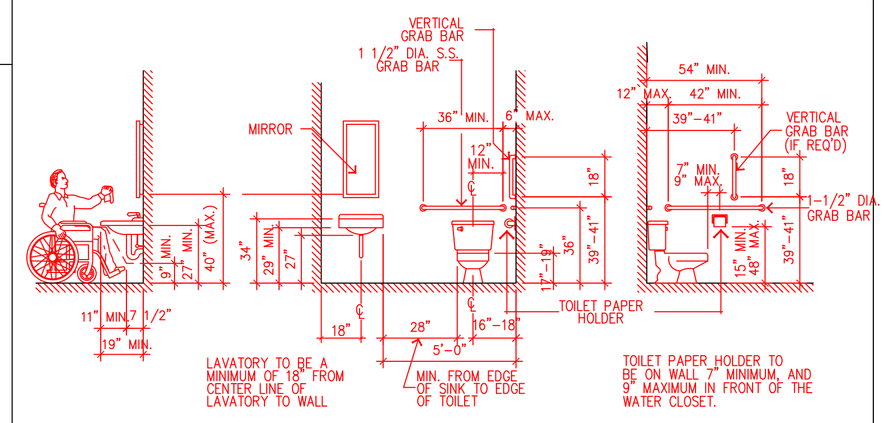

LAVATORY TO BE A MINIMUM OF 18" FROM CENTER LINE OF LAVATORY TO WALL

TOILET PAPER HOLDER TO BE ON WALL 7" MINIMUM, AND 9" MAXIMUM IN FRONT OF THE WATER CLOSET.

1 Toilet Room Details
SCALE – 1/4" = 1'-0"

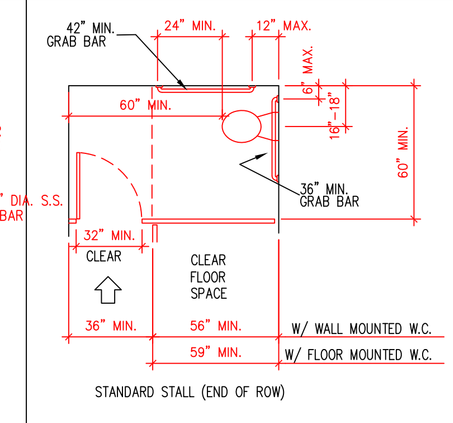

STANDARD STALL (END OF ROW)

2 Toilet Room Details
SCALE – 1/4" = 1'-0"

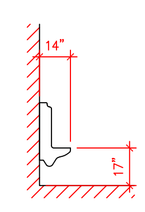

URINALS

1. HEIGHT. URINALS SHALL BE STALL-TYPE, OR WALL-HUNG WITH A TAPERED ELONGATED RIM MOUNTED AT A MAXIMUM OF 17 IN (430 MM) ABOVE THE FINISH FLOOR. A TAPERED ELONGATED RIM IS ONE THAT NARROWS TOWARD THE FRONT TO ALLOW A WHEEL-CHAIR USER TO STRADDLE THE BASIN AND WHICH EXTENDS AT LEAST 14" FROM THE VERTICAL SURFACE ON WHICH THE FIXTURE IS MOUNTED.
2. CLEAR FLOOR SPACE. A CLEAR FLOOR SPACE 30 IN BY 48 IN. (760 MM BY 1220 MM) SHALL BE PROVIDED IN FRONT URINALS TO ALLOW FORWARD APPROACH. THIS CLEAR SPACE SHALL ADJOIN OR OVERLAP AN ACCESSIBLE ROUTE. URINALS INSTALLED IN ALCOVES DEEPER THAN 24 IN REQUIRE ADDITIONAL MANEUVERING AREA. URINAL SHIELDS THAT DO NOT EXTEND BEYOND THE FRONT EDGE OF THE URINAL RIM MAY BE PROVIDED WITH 29 IN (735 MM) CLEARANCE BETWEEN THEM.
3. FLUSH CONTROLS. FLUSH CONTROLS SHALL BE HAND OPERATED OR AUTOMATIC, AND SHALL BE MOUNTED NO MORE THAN 44 IN (1120 MM) ABOVE THE FINISH FLOOR.

3 Urinal Details
SCALE – 1/4" = 1'-0"

THIS DOCUMENT IS THE PROPERTY OF SHERIDAN CORPORATION AND IS NOT TO BE REPRODUCED, DISTRIBUTED OR USED WITHOUT WRITTEN PERMISSION OF SHERIDAN CORPORATION, ANY ASSOCIATION, COUNCIL OR LICENSING BOARD WITHOUT THE EXPRESS WRITTEN PERMISSION.

Sheridan
www.sheridancorp.com
FAIRFIELD
PORTLAND
MAINE

STATE OF MAINE
DAVID C. HEATHERWICK
No. 3107
LICENSED
PROFESSIONAL ENGINEER
04-22-2016

JOB NO.	16-1003
ENGINEERING DWG. NO.	A6
TITLE	2010 A.D.A. "Standards for Accessible Design"
	DESIGN BUILDER

ENGINEERING DESIGNS FOR
Safelite AutoGlass
421 Warren Avenue
Portland, Maine

EST. NO	
SIZE	
TYPE	
DRAWN BY	RAJP
REVIEWED BY	DS
SCALE	AS NOTED
DATE	04/22/2016

DRAWING STATUS

REVISION

DATE